ASSEMBLY INSTRUCTIONS

SIEGENIA®
brings spaces to life

KFV

Multi-point lock

AS 3600
AS 3600 TA
AS 3600 T4

Window systems
Door systems
Comfort systems

Contents

1. Introduction

Please read these assembly instructions carefully before you begin the assembly work. Follow the instructions in Chapter 2 "Safety", in order to prevent personal injury or disturbance.

1.1 Validity

These instructions describe the installation of the AS 3600 multi-point lock and are valid unless revoked.

1.2 Target group of this documentation

This documentation is intended for use by specialists only. All work described in this document is to be performed only by experienced professionals with training and practice in the assembly, as well as the commissioning and maintenance of multi-point locks.

1.3 Intended use

1.3.1 Installation location

- The multi-point lock is suitable for installation in single-sash and double-sash doors in permanent buildings.
- The multi-point lock may only be installed in doors that have been fitted in a technically sound manner.
- The door design must permit use of the multi-point lock.

1.3.2 Locking part and hardware

- Repair of the multi-point lock is not permissible. If the multi-point lock is damaged, it must be replaced by KFV or repaired by a service agent authorised by KFV.
- Only KFV frame parts with Q adjustment may be used.
- The locking elements must always engage freely in the lock striker of the frame parts.

1.4 Improper use

- Do not use for escape doors.
- The multi-point lock is not designed to accommodate changes to its shape or seal which arise as a result of differences in temperature or changes to the building.
- The multi-point lock must not be used in doors for wet rooms or rooms in which the air contains aggressive or corrosive components.
- Foreign objects and/or materials which impede or prevent proper use must not be placed within the opening range, the locking system or the striker plates.
- The multi-point lock must not be interfered with and/or modified.
- Locking elements must not be misused to hold the door open.
- Movable or adjustable locking pieces (e.g. deadbolt, latch) must not be painted over.

1.5 Maintenance and service notes

- A regular annual maintenance should be carried out to check that all movable components are functioning correctly.
- The falling bolts of the auxiliary boxes must be lubricated once a year. Only use oil-based PTFE spray H1 for this purpose. Do not use lubricants containing solvents or resins. All further components of the multi-point lock have already been treated with long-term lubrication and are consequently maintenance-free.
- Never use cleaning agents that are aggressive or contain solvents, as these may damage the surface of the components.
- Both the contractor and the user must be trained in the operation and maintenance of the multi-point lock.

1.6 Installation conditions and requirements

Local building laws and regulations must be observed before and during door installation in addition to the following requirements and conditions:

- Observe the milling dimensions
- Position the frame parts according to the specifications, observing the horizontal and vertical adjustment accurately.
- Before installing the multi-point lock, check the dimensional accuracy of the door and the door frame. The multi-point lock must not be installed if the door and/or the frame is warped and/or damaged.
- Install the multi-point lock and accessories according to our assembly instructions.
- Remove any splinters from the lock mortise after milling.
- Once the lock is installed, do not perform mechanical work on the door (such as drilling or milling). Do not drill into or through the main lock under any circumstances.
- Observe the specified positions and sizes when drilling the holes.
- Follow the hardware manufacturer's instructions when drilling the holes for the operating handle/hardware.
- Install hardware components and cylinder flush without overtightening the screws or screwing them in at an angle.
- Fasten handle set by hand only and do not use force when installing the spindle.
- Adhere to the gap between the face plate and the frame parts:
  - in accordance with DIN 18251-3 = 3.5 +/- 1.5 mm
- Operating elements should not impede each other.
- Check that any existing block setting is packed correctly.

- Surface treatment of the door and door frame must take place before the multi-point lock is installed. Treating these surfaces at a later stage can reduce the functional capacity of the multi-point lock.
- Use only acid-free neutral-cure sealants to prevent corrosion of components and/or the door.

1.7 Transport

- Always transport the multi-point lock in a vertical position, whether uninstalled or installed in the door leaf.
- Use the transit supports included in the delivery for transporting a pre-assembled door. This prevents the unlocking of falling bolts and hook bolts.
- Also block set the door leaf in the frame.
- Do not place the multi-point lock heavily on the ground when it is unpackaged, as this can damage the lock.
- Do not carry the door by the lever handle or hardware when transporting it.
- Opening/closing/locking: It must be possible to open and close the door easily. A protruding latch and /or deadbolt must not impede the opening of the door.

1.8 Dimensions

All measurements are given in mm.

1.9 Visual indicators

1.9.1 Instructions and symbols

	This symbol designates hazards that could damage the product or something in the surrounding area.
	This symbol indicates special features and designates facts that require increased attention.

1.10 Explanation of symbols

	Milling cutter or drill diameter
	Groove length
	Groove depth from component
	Groove width
	Through hole
	Metal profiles
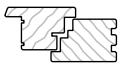	Timber profiles
	PVC profiles

1.11 Other types of indicators

Below is a list of symbols used in these assembly instructions and their meanings:

- Items of text following this marker are found in lists.
- ► Items of text with this marking in front of them are instructions that must be followed in the specified order.

" " Items of text in quotation marks are cross-references to other chapters or sections.

1.12 Screw recommendation

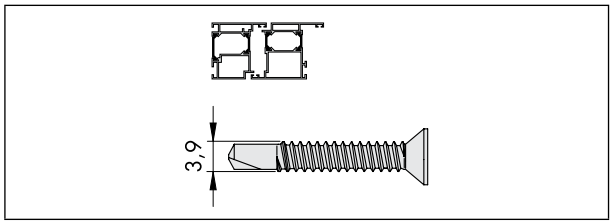

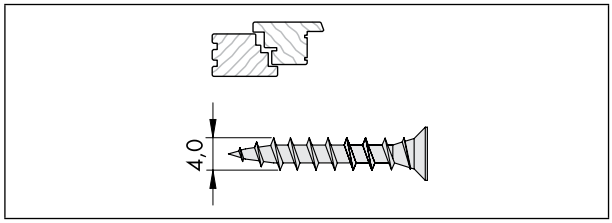

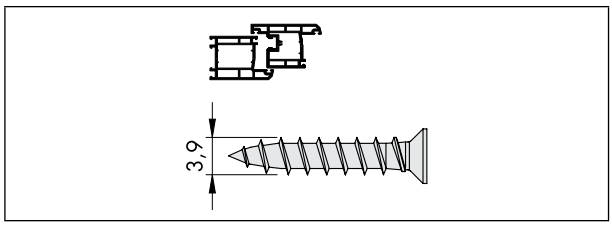

1.13 Causes of damage

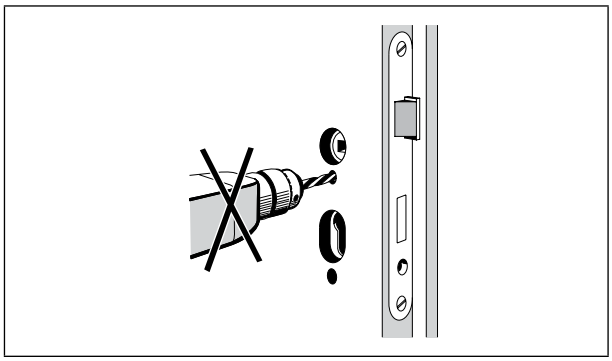

Do not drill through the door leaf in the area of the gear box/boxes when the lock or the multi-point lock is installed.

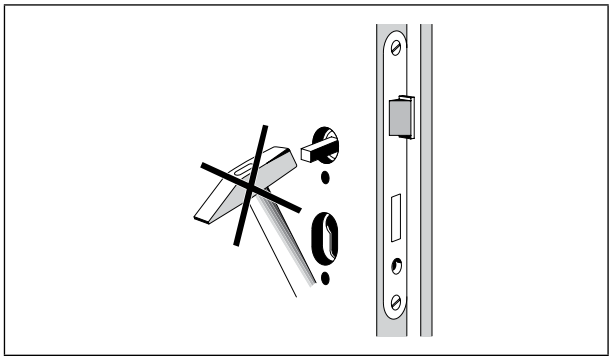

The spindle must not be hit through the lock nut with force.

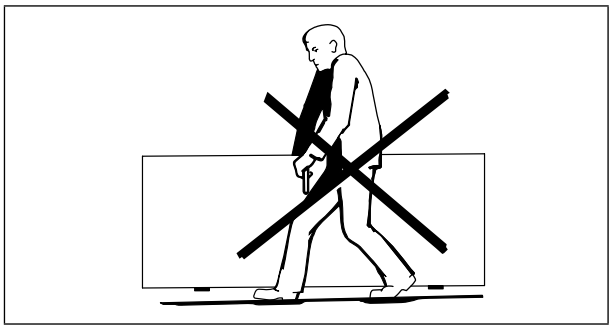

The door leaf must not be carried using the lever handle as a grip.

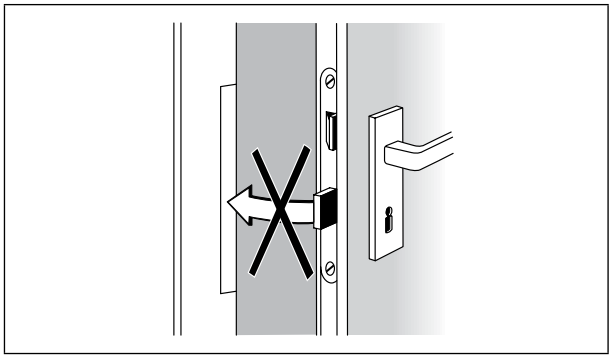

None of the locking elements may be excluded when the door is open.

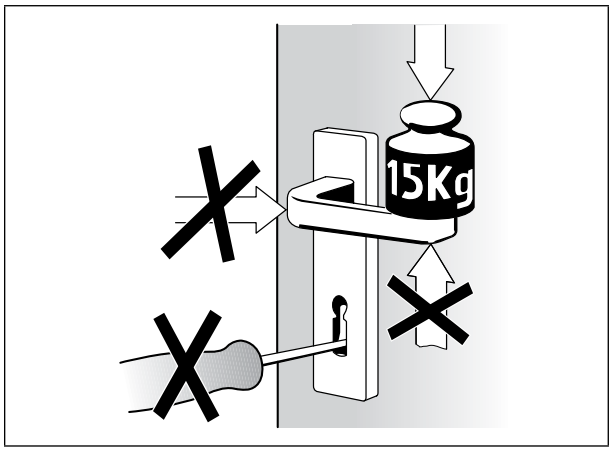

Force must be exerted on the lever handle only in the normal direction of rotation.

A maximum force of 150 N may be applied to the lever handle in the direction of actuation.

The lock or multi-point lock must be locked only with the associated key (and not with foreign objects).

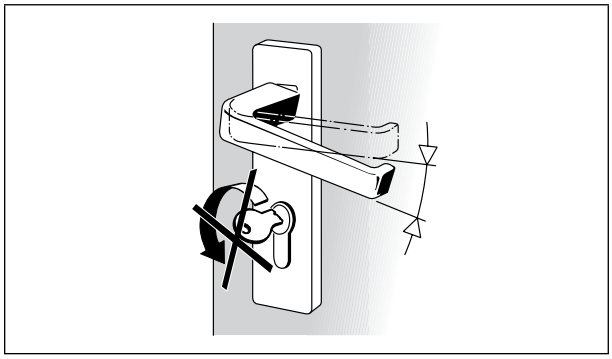

The lever handle and key must not be operated at the same time.

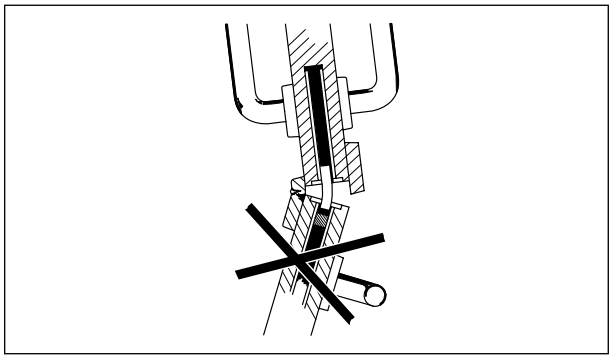

Double-leaf doors must not be forced open using the inactive sash.

2. Safety

Before starting the assembly work, read the following safety instructions carefully. They are designed to keep you safe and prevent hazards, injuries and material losses.

2.1 Personal protective equipment

You will need the following protective equipment when assembling multi-point service locks:

- Safety shoes
- Protective gloves
- Protective goggles
- Safety notes

2.2 Heavy components

When working with multi-point locks, the door leaf will need to be lifted off in some cases.

This presents a risk of foot injuries.

- Always wear safety shoes.

2.3 Sharp edges

Cropping metal components creates sharp edges.

This presents a risk of cutting injuries.

- Wear suitable protective gloves.

2.4 Swarf flying around rapidly

During milling work, there will be swarf flying around rapidly.

This presents a risk of eye injuries.

- Wear protective goggles.

3. Liability

3.1 Intended use

Any use of this product that is not in accordance with its intended use, or any adaptation of or modification to the product and its associated components for which our express consent has not been obtained, is strictly prohibited. We accept no liability whatsoever for any material losses or injury to people caused by failure to comply with this stipulation.

3.2 Product liability

Our products are guaranteed – subject to correct installation and proper use – for a period of one year from the date of receipt by a company (according to our general terms and conditions) or as otherwise agreed, and for a period of two years for end consumers, in accordance with statutory provisions. As part of our ongoing improvements, we reserve the right to replace individual components or entire products. Consequential losses resulting from defects are excluded from the warranty within the limits of the law. The warranty shall become void if modifications that are not authorised by us or have not been described in this documentation are performed on the product and/or individual components, or if the product and/or individual components is/are dismantled or partly dismantled, and the defect is due to the changes made.

3.3 Disclaimer of liability

The product and its components are subject to stringent quality controls. The product functions reliably and safely when used correctly. Our liability for consequential losses and/or claims for damages is excluded, except in the case of wilful misconduct or gross negligence, or where we are responsible for injury to life, physical injury or damage to health. Strict liability under the German Product Liability Act (Produkthaftungsgesetz) remains unaffected. Liability for the culpable violation of significant contractual obligations also remains unaffected; liability in this case is limited to losses that are specific to the contract and that could have been foreseen. The above regulations do not imply a change in the burden of proof to the detriment of the consumer.

3.4 Definition of terms

3.4.1 Multi-point lock and door leaf

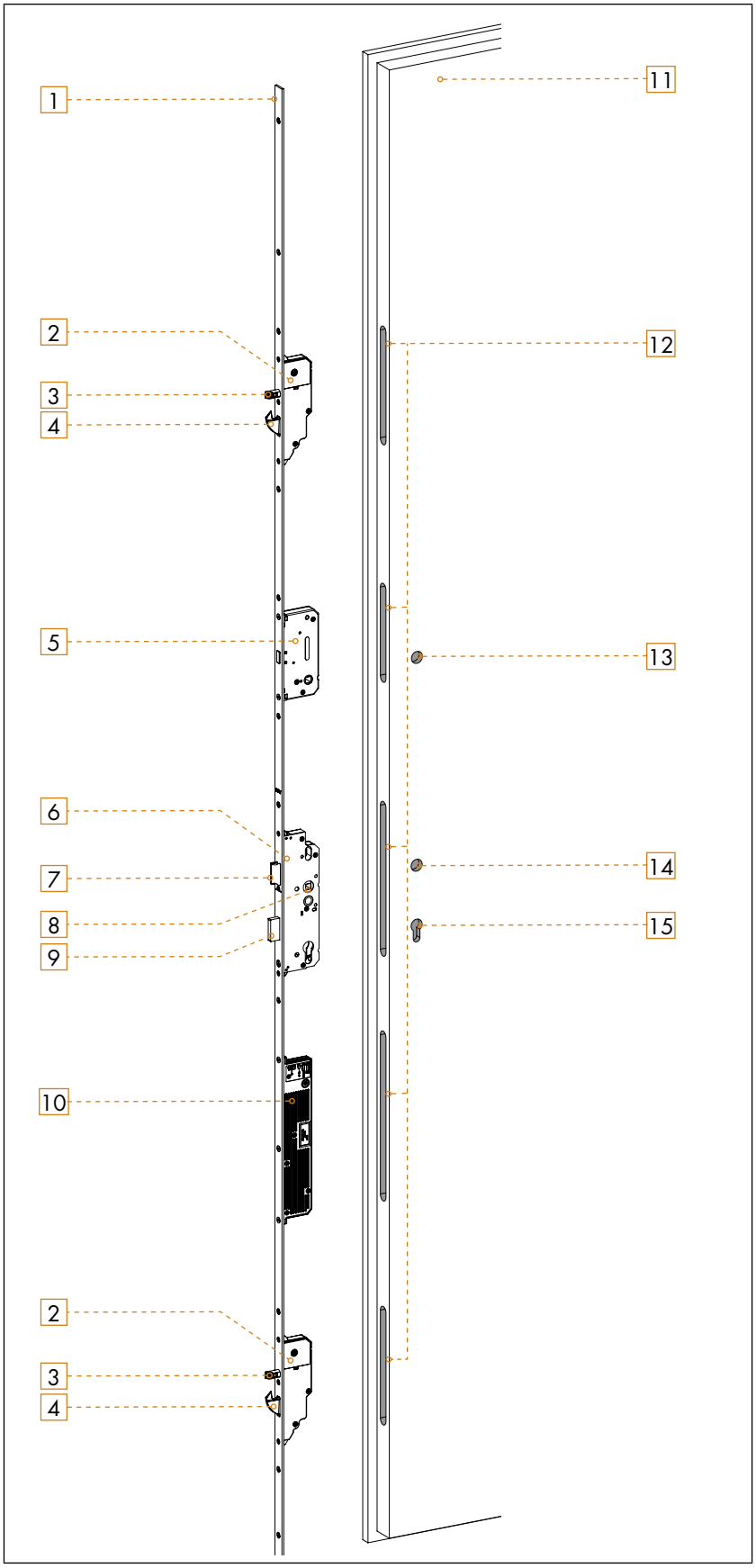

1	Face plate
2	Auxiliary box
3	Falling bolt
4	Hook bolt
5	Safety lock (T3/T4)
6	Main lock case
7	Main lock latch
8	Spindle square
9	Main lock bolt
10	A-opener
11	Door leaf
12	Routed pockets
13	Milling for the olive
14	Milling for the lever handle
15	Milling for profile/round cylinder

3.4.2 Frame parts and frame

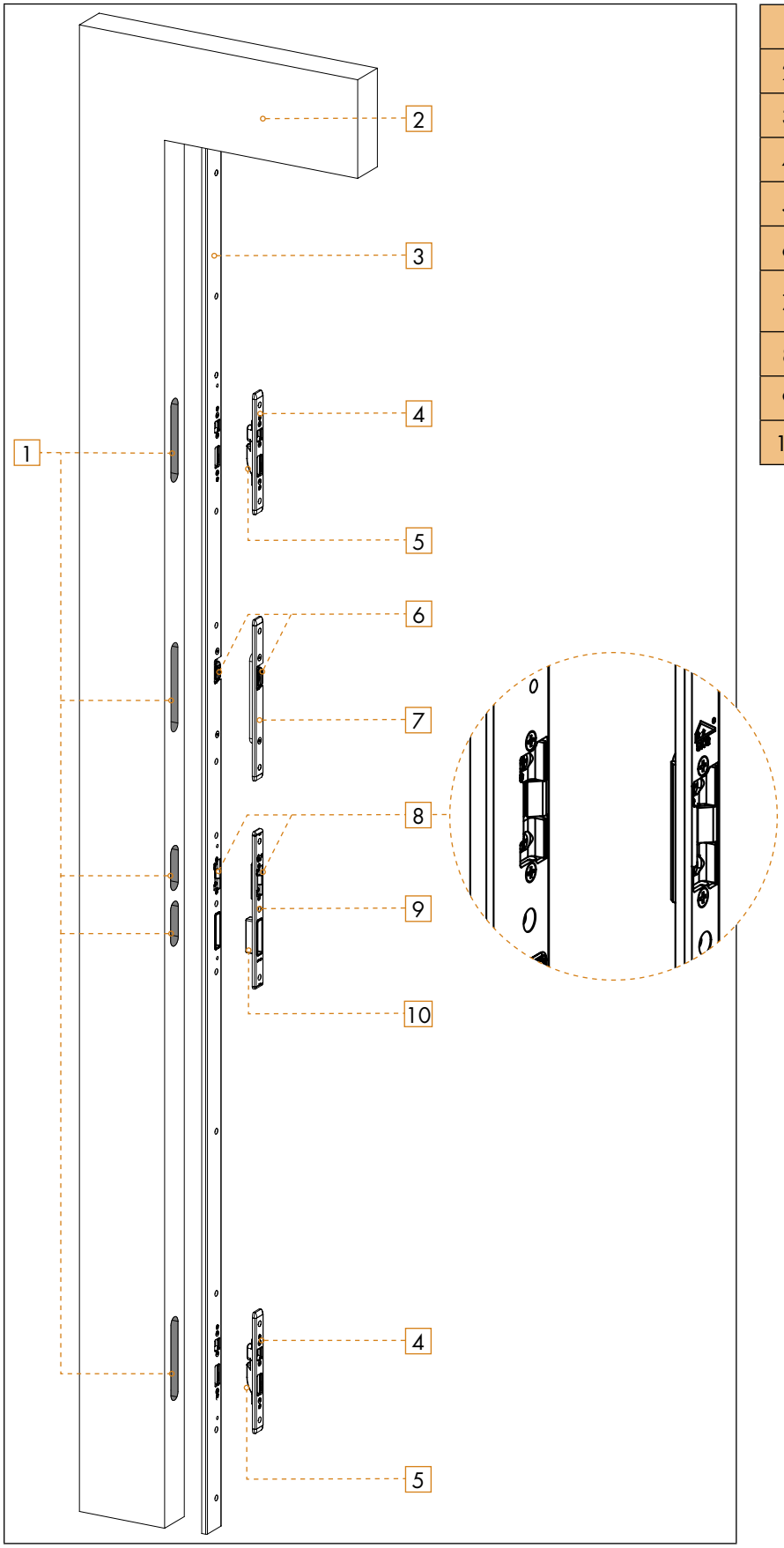

1	Routed pockets
2	Frame
3	Locking rail
4	Frame part for auxiliary box
5	Q adjustment
6	Safety catch
7	Frame part for safety lock
8	AT piece
9	Frame part for main lock
10	PVC backing

4. Overview

4.1 Delivery options

AS 3600	AS 3600 TA (with daytime release)	AS 3600 T4 (with safety lock)
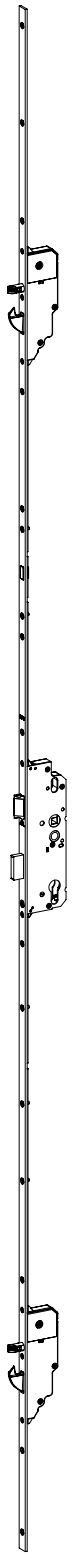	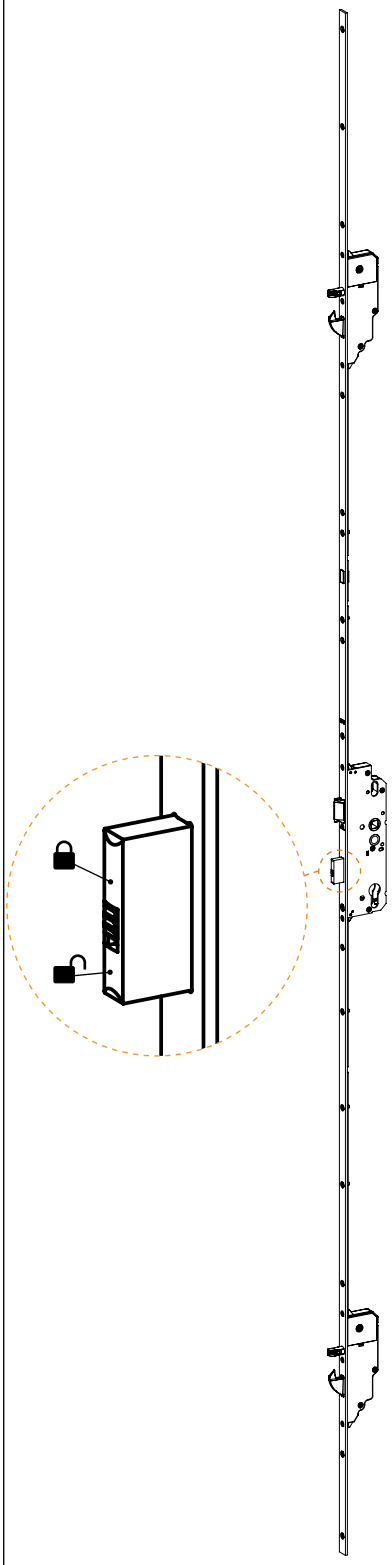	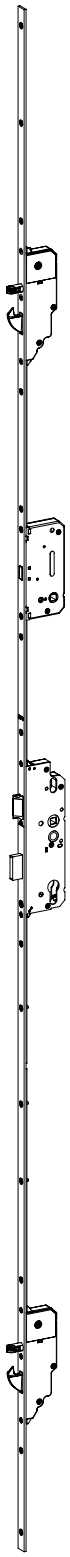

4.2 Use and combination possibilities

The AS 3600 automatic multi-point locking system is available from the factory in three versions and can be retrofitted with further components.

4.2.1 AS 3600 standard design

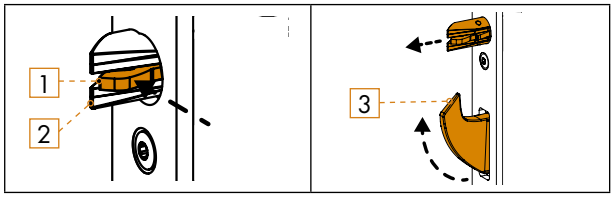

Automatic locking part

- The triggers [1] of the falling bolt [2] are pressed inwards on contact with the frame part.
  Falling bolt and hook bolt [3] move automatically to the locking position.

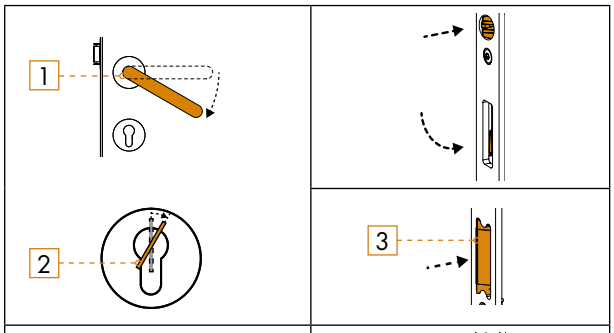

Open:

- The falling bolt, hook bolt and main lock latch [3] retract when the lever handle [1] is activated or when the key [2] is turned to the release position.

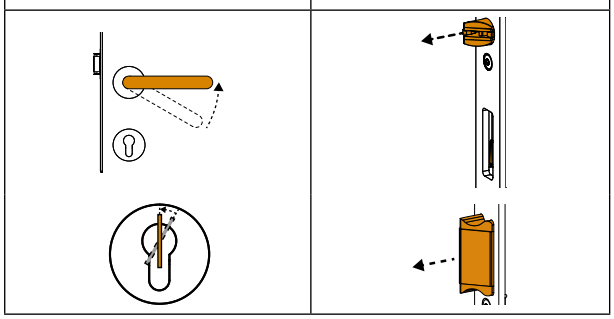

- After the lever handle or key are released, the falling bolts move to the trigger position.
- The hook bolts remain in the release position.
- The main lock latch extends.

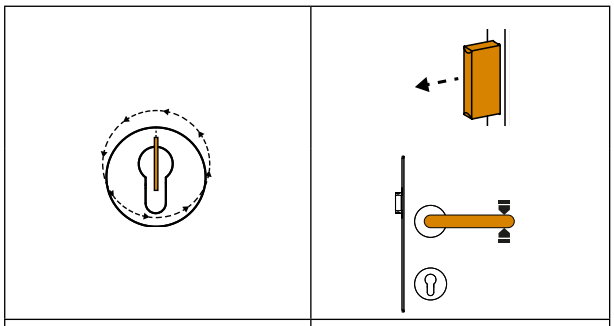

Lock:

- The main lock bolt extends when the key is turned once into the locking position.
- The lever handle is blocked in this position and the door cannot be opened without the key.

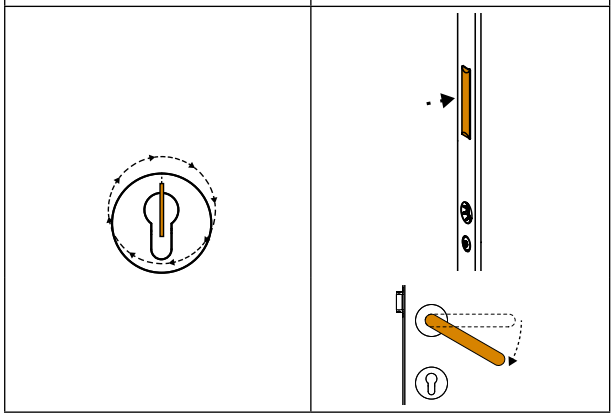

- The main lock bolt retracts when the key is turned once into the release position.
- In this position, the lever handle can be moved freely.

4.2.2 AS 3600 TA

Activating/deactivating the daytime release

The daytime release enables the door to be opened from the outside without the use of a key. When the daytime release is activated, the locking elements of the auxiliary boxes (falling bolt and hook bolt) are retracted. The door is only held by the main lock latch on the day latch. When the daytime release is activated, the day latch pivots back when there is pressure against the door in the opening direction and releases the main lock latch.

Two adjustments must be made to activate/deactivate the daytime release:

- In the door leaf on the main lock bolt:
  There is a sliding handle on the front side of the main lock bolt via which the daytime release of the auxiliary boxes can be activated or deactivated. If the daytime release is activated, the falling bolts are fixed in the retracted position.
- In the door frame on the day latch:
  There is also a sliding handle on the day latch, this blocks or releases the day latch.

The daytime release can be activated or deactivated via the lever handle or profile cylinder. The activation/deactivation via the lever handle or via the key differs in the first two steps. The following steps are identical.

NOTE!

There is a risk of being locked out if the daytime release is not activated completely.

- If the door closes accidentally and the daytime release on the day latch is not activated, the main lock latch will engage and keep the door closed.
- If the door closes accidentally and the daytime release on the main lock bolt is not activated, the falling bolts and the hook bolts will move to the locking position.

The door can then only be opened from the outside with a key in both cases!

Both functions must always be activated.

NOTE!

Never close the main lock bolt in the locking position when the daytime function is activated.

- The daytime function will be deactivated in an improper manner if the main lock bolt is closed with the daytime function deactivated in the locking position. This will lead to premature wear and tear.

Before the main lock bolt may be closed in the locking position, The daytime release must be deactivated in accordance with the procedure described below.

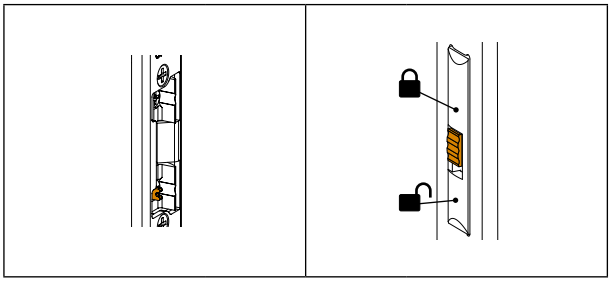

The daytime function is activated via a sliding handle on the day latch [1] (frame) and on the main lock bolt [2] (door).

The deadbolt is marked with two lock symbols:

- Sliding handle up = daytime function deactivated
- Sliding handle down = daytime function activated

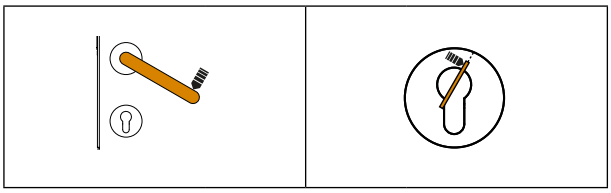

Activating the daytime function:

- Activate and hold the lever handle or turn the key to the release position and hold.

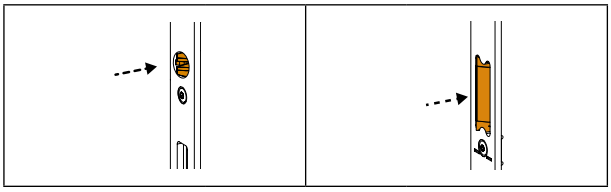

- The falling bolt and main lock latch retract.

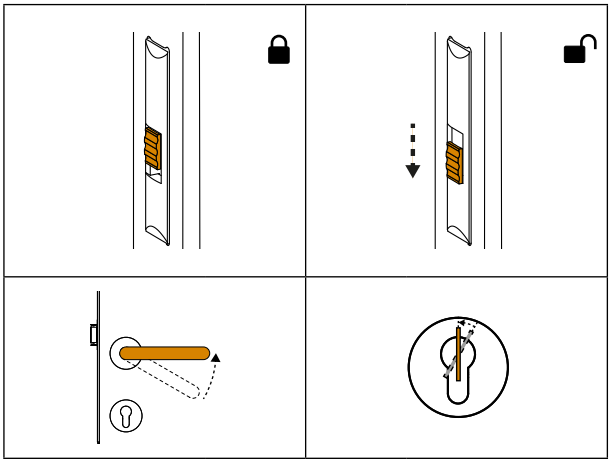

- Move the sliding handle in the main lock bolt downwards.
- Release the lever handle or key.

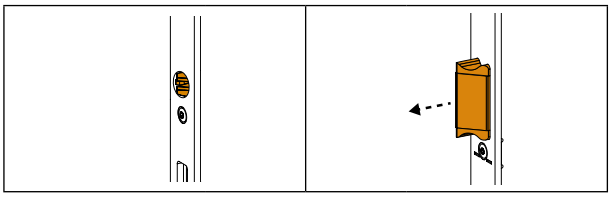

- The falling bolts remain retracted meaning that the automatic locking mechanism is not triggered by closing the door.
- The main lock latch extends again.

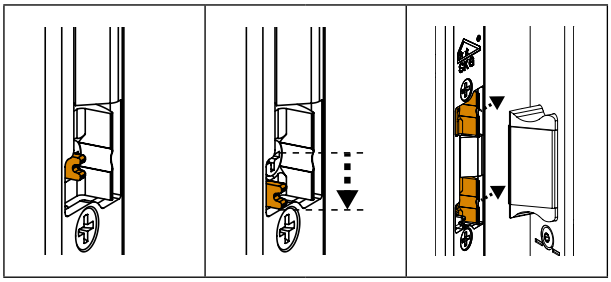

Release of the day latch on the frame side

- Move the sliding handle [1] from the inside to the outside.

The daytime function is activated:

- The falling bolts are retracted. The automatic locking is not triggered when the door is closed.
- The day latch is released. It pivots back when pressure is applied from the outside, releases the main lock latch and the door can be opened.

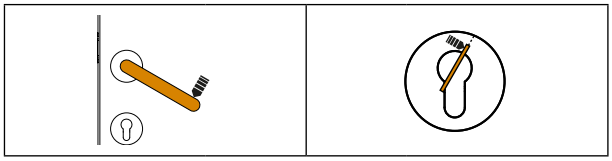

Deactivating the daytime function:

- Activate and hold the lever handle or turn the key to the release position and hold.

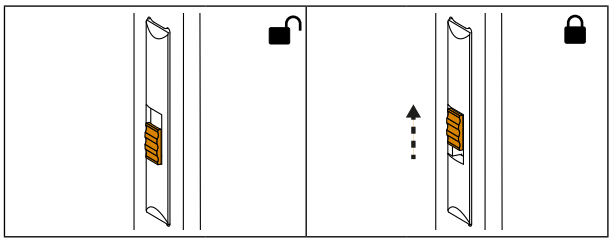

- Move the sliding handle in the main lock bolt upwards.

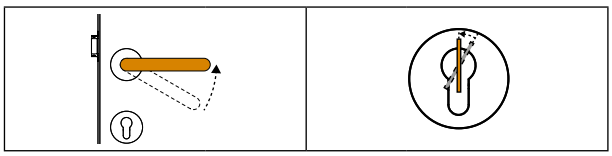

- Release the lever handle or turn the key to the withdrawal position.

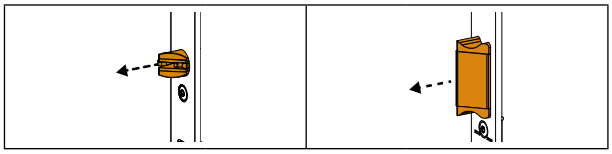

- The falling bolts move to the trigger position.
- The main lock latch extends again.

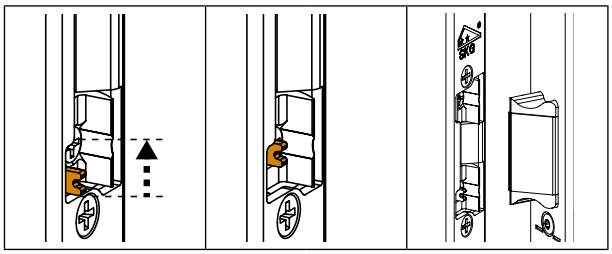

Locking the day latch on the frame side

- Move the sliding handle [1] from the outside to the inside.

The daytime function is deactivated.:

- The falling bolts are in the trigger position. The automatic locking is triggered when the door is closed.
- The day latch is locked. The main lock latch is held by the day latch by pushing against the door in the opening direction.

4.2.3 AS 3600 T4

The AS 3600 T4 automatic multi-point locking system is equipped with a safety lock.

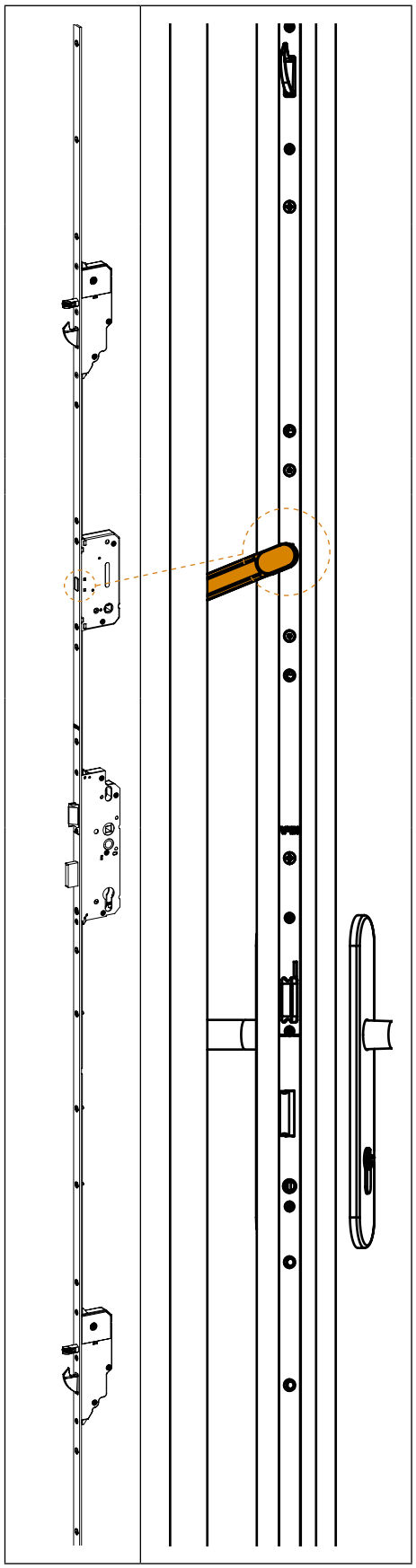

The T4 safety lock restricts the opening gap of the door. The T4 safety lock can be locked and released from the inside via the olive and can be released with the key via the profile cylinder.

In addition, separate frame parts, designed for the respective door system, with a safety catch are required.

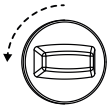

Locking the T4 safety lock

- Close the door.
- Turn the olive 90° in the locking direction.

The deadbolt moves to the locking position and engages into the safety catch.

If the door is opened, the safety catch restricts the opening gap of the door.

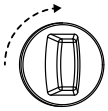

Release the T4 safety lock

- Close the door.
- Turn the olive 90° in the release direction.

The deadbolt moves to the release position and releases the safety catch.

The door can be opened fully once again.

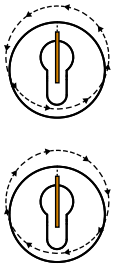

Release the T4 safety lock via the profile cylinder.

The main lock bolt must move to the locking position once to release the T4 safety lock via the profile cylinder.

- If the main lock bolt is in the release position, the key must be turned once in the locking position. The deadbolt of the T4 safety lock will jump in the release position, then turn the key once in the release position. The door can be opened fully once again.
- If the main lock bolt is in the locking position, the key must be turned once in the release position and then once in the locking position.
  The deadbolt of the T4 safety lock will jump in the release position, then turn the key once in the release position.
  The door can be opened fully once again.

4.2.4 Retrofitting components

The AS 3600 automatic multi-point locking system can be retrofitted with further components.

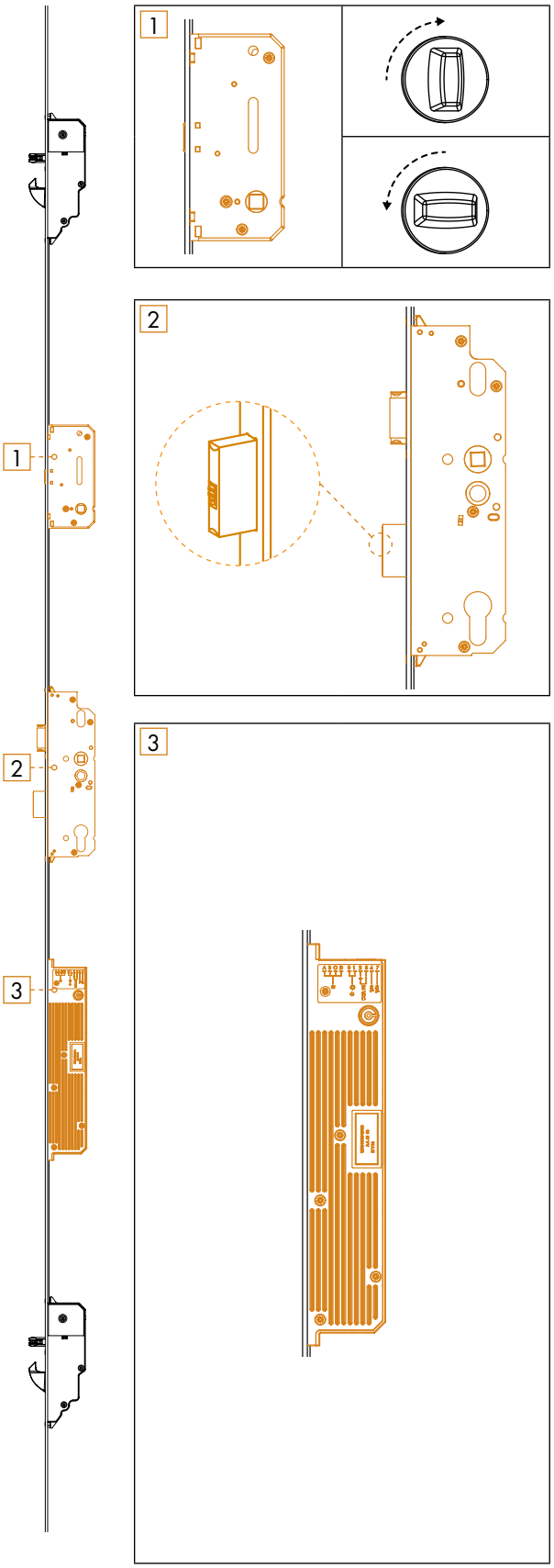

T3 Safety lock:

The retrofittable "T3" safety lock differs from the pre-assembled "T4" safety lock in that it can only be locked and released from the interior side of the door via the olive.

3050 TA main lock

The AS 3600 automatic multi-point locking system can be retrofitted with the TA daytime function.

A separately deliverable 3050 TA main lock is available for this purpose.

A-opener:

The AS 3600 automatic multi-point locking system can be upgraded to an electromechanical multi-point lock with the A-opener motor (available for purchase separately).

Automatic mechanical locking, electromechanical release. The hook bolts and falling bolts of the auxiliary boxes and the latch are retracted into the main lock during electromechanical opening.

Enables connection to an intercom system or access control system. The connection possibilities correspond to the KFV GENIUS Type A. Cable transfers and accessories from the KFV GENIUS programme are compatible, and assembly and connection are the same. The KFV A-opener does not have a magnetic sensor, therefore no magnet is required on the frame side.

NOTE!

The entire multi-point lock is blocked if the main lock bolt is in the locking position. The multi-point lock cannot be opened via the A-opener in this position.

The A-opener can draw the main lock latch,and the falling bolt and hook bolt into the release position only if the main lock latch is in the release position.

4.3 Combination possibilities

The delivery versions AS 3600, AS 3600 TA and AS 3600 T4 can be assembled in the following combinations with the A-opener, the T3 safety lock and the 3050 TA main lock (daytime function):

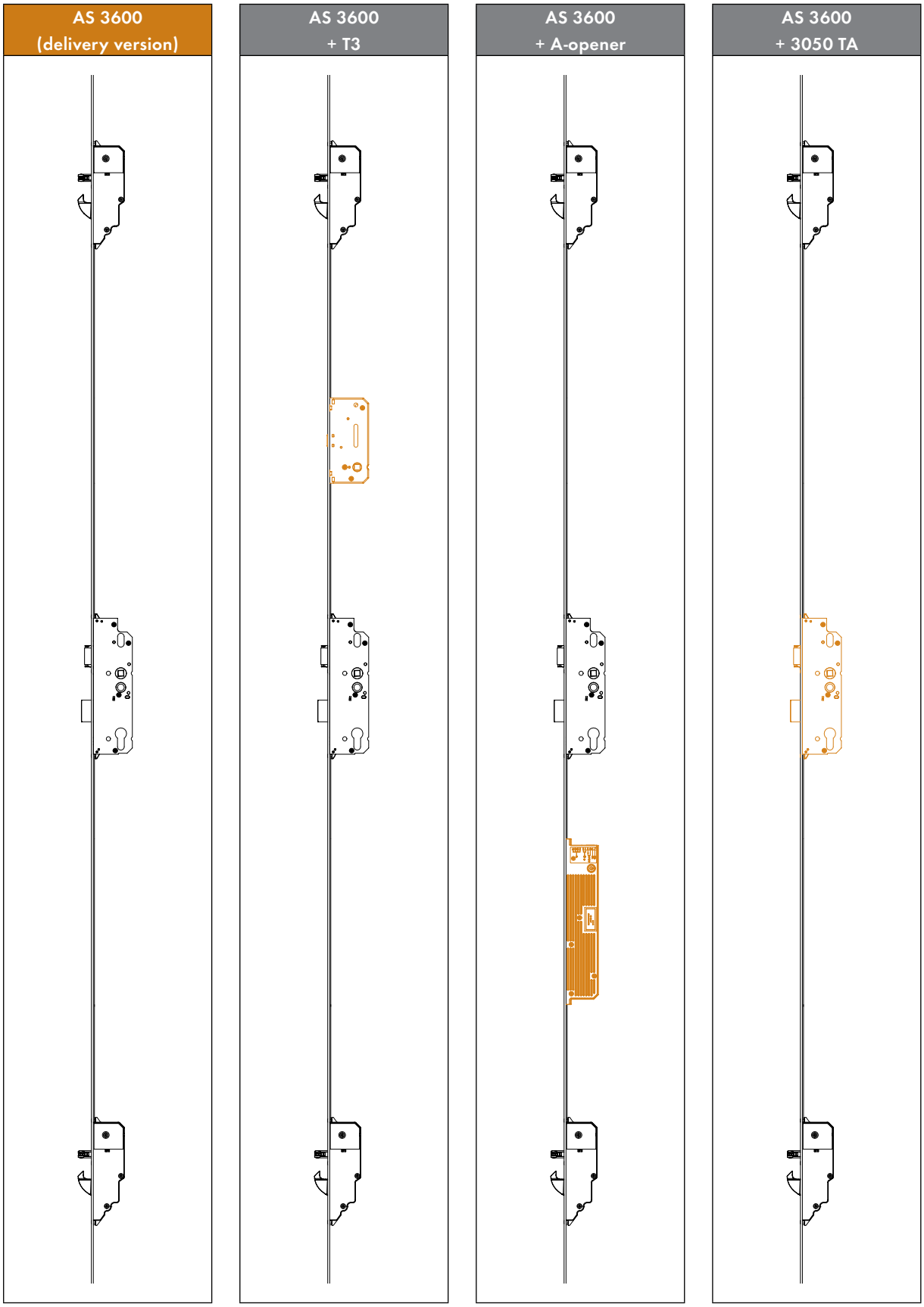

AS 3600 + 3050 TA + T3	AS 3600 TA (delivery version)	AS 3600 TA + T3	AS 3600 T4 (delivery version)
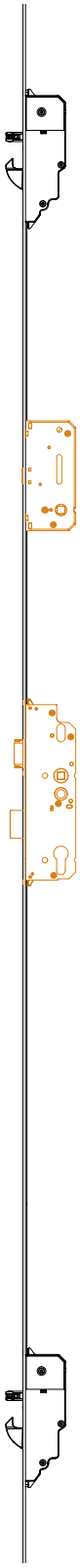	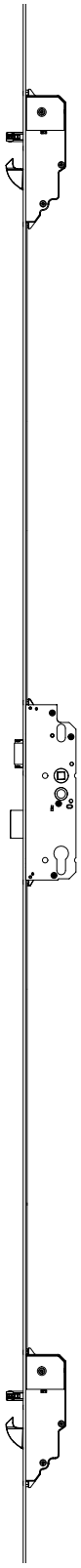	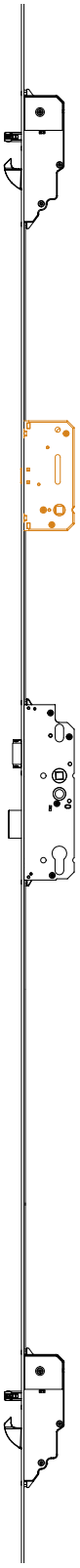	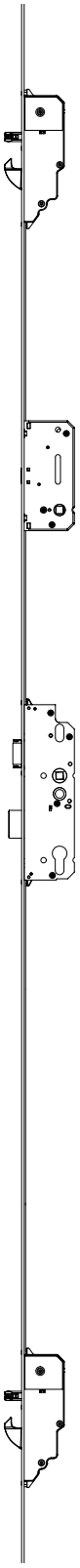

4.4 Size variants

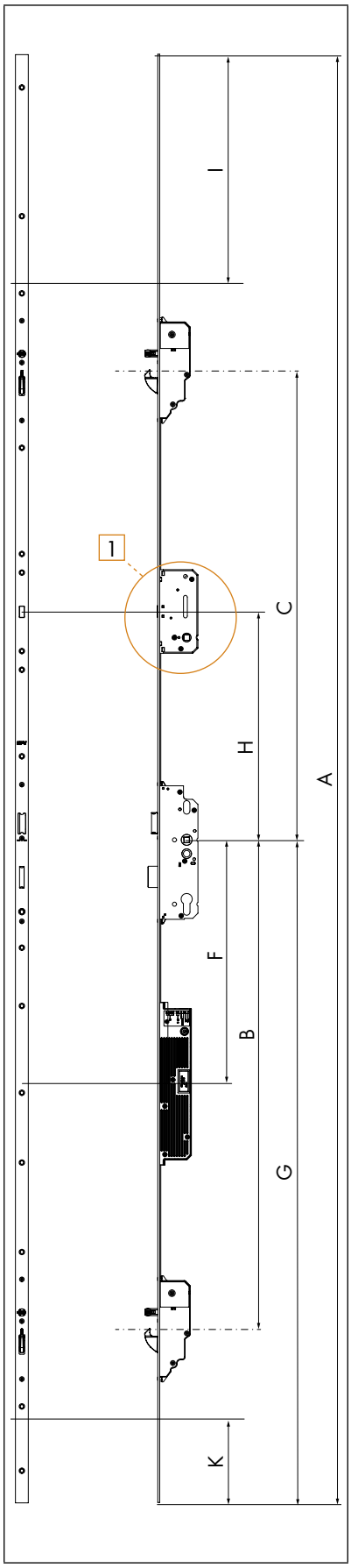

Size variants	A	B	C	F	G	H	I	K	suitable for sash rebate height
B296*	2170	760	355	380	1020	-	665	255	1505 - 1754
B298	2170	760	605	380	1020	355	415	130	1755 - 1880
B001	2170	760	730	380	1020	355	290	130	1881 - 2170
B003	2400	760	980	380	1020	355	270	130	2171 - 2400
B039*	1700	760	355	380	952	-			1505 - 1754
B041	1700	760	605	380	952	355			1755 - 1880
B166	1855	760	730	380	952	355			1755 - 2170
B253	2170	760	980	380	952	355			1881 - 2170
K038	1629	760	605	380	892	355			1755 - 1880
K002	1754	760	730	380	892	355			1755 - 2170
K054	2004	760	980	380	892	355			1881 - 2170

*	= not available with hole group "T0"
Dimensions I + K	= can be shortened

[1] Hole group "T0" for optional "T3" safety lock

4.5 Change DIN orientation of the latches

4.5.1 Change DIN orientation of the main lock latch

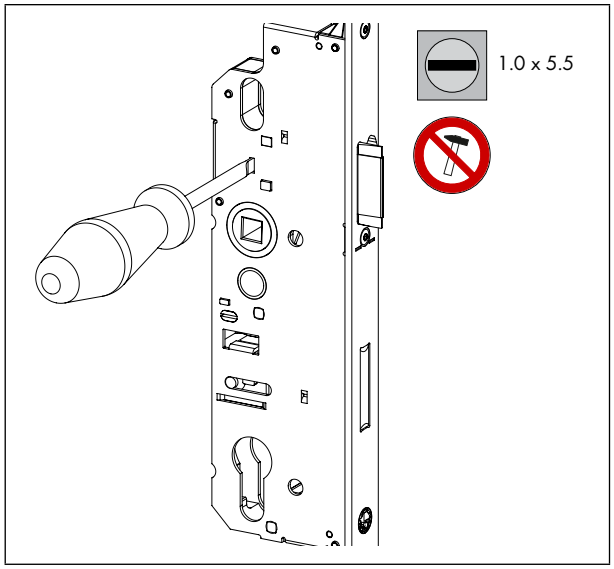

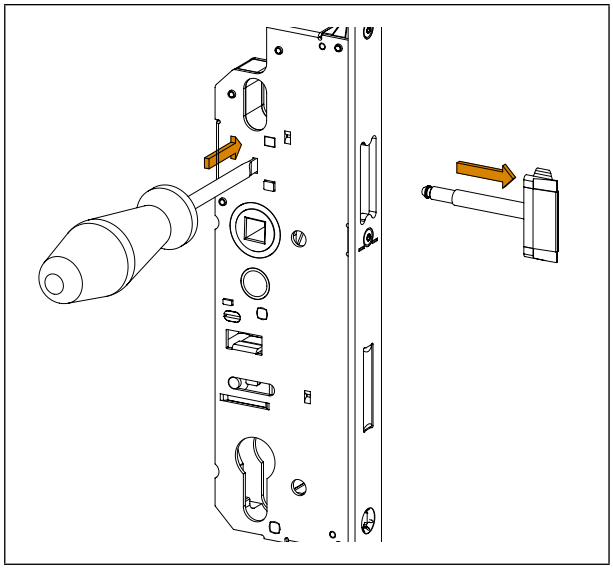

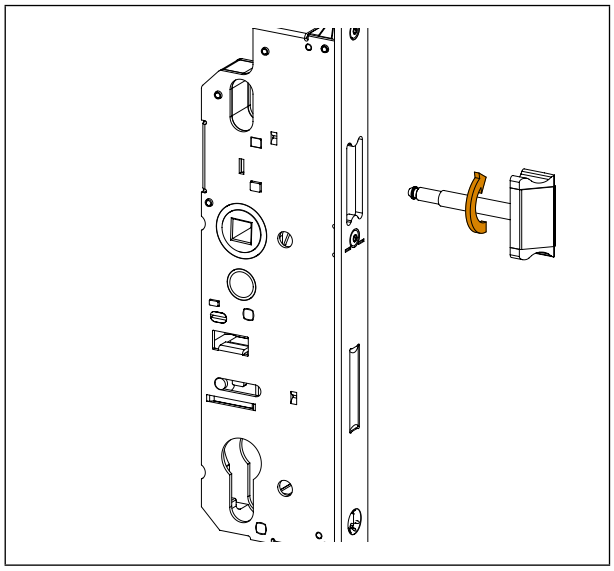

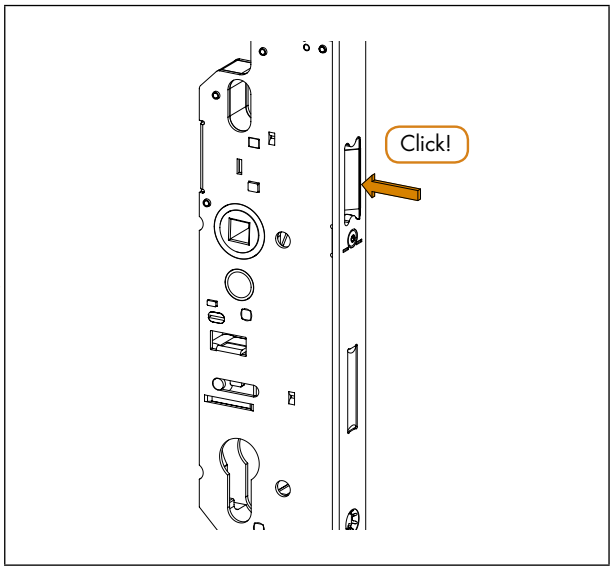

Functional test of the latch

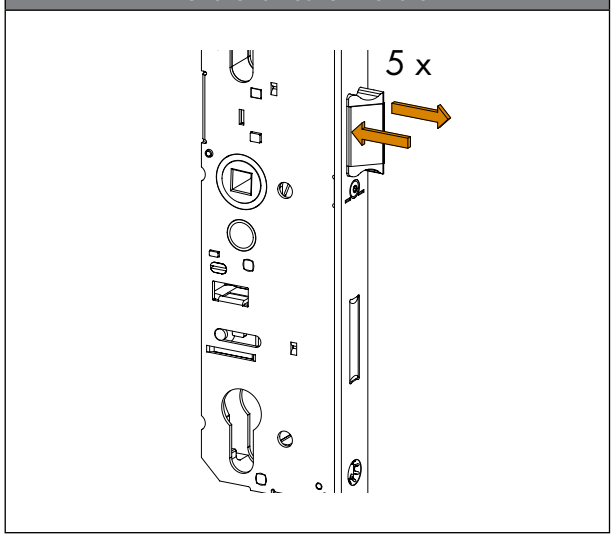

- Press the latch several times (approx. 5x) into the gear box.
- The latch must be able to extend again with ease.

4.5.2 Change DIN orientation of the falling bolt

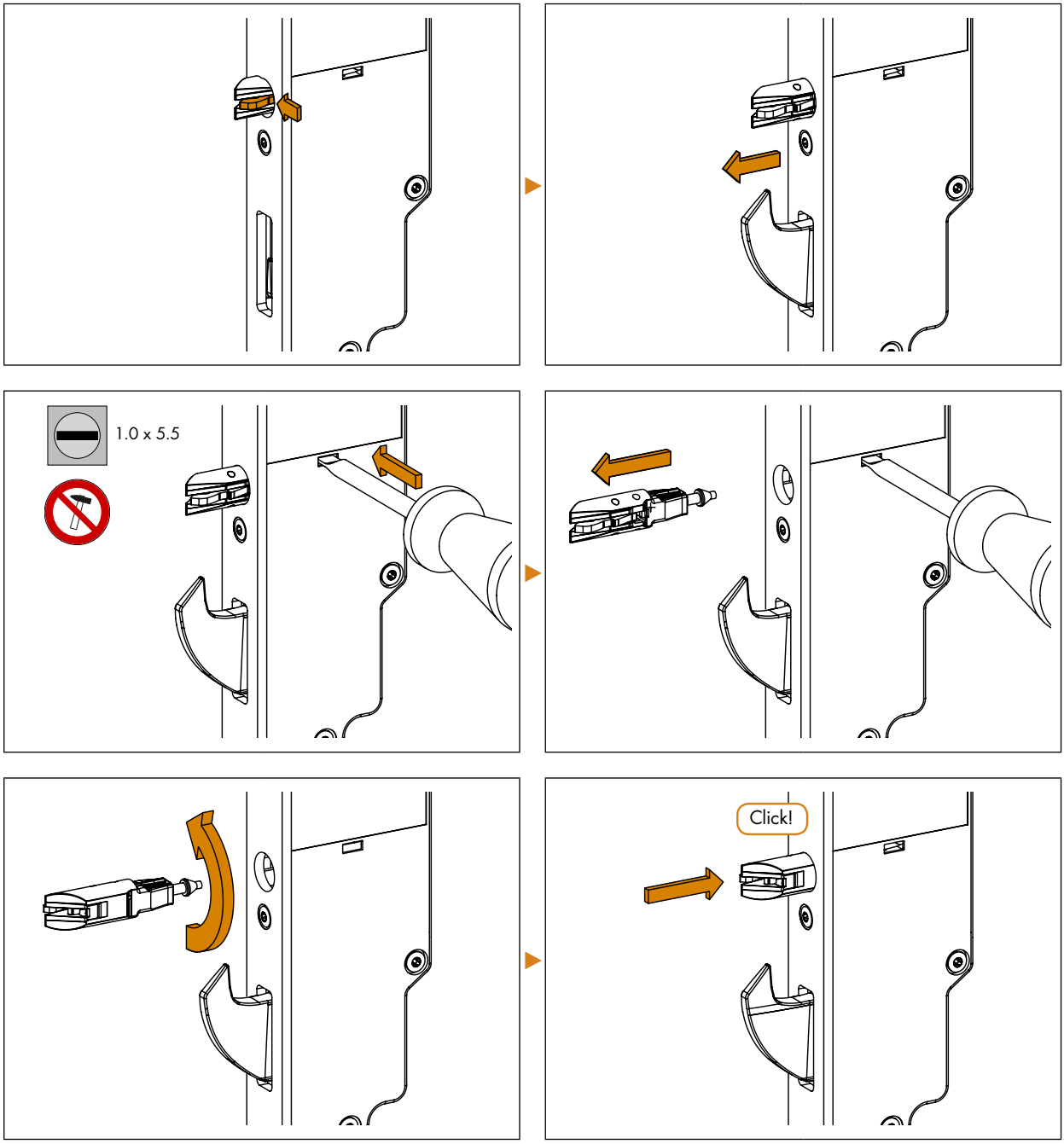

Check the function of the falling bolt via the lever handle and the key

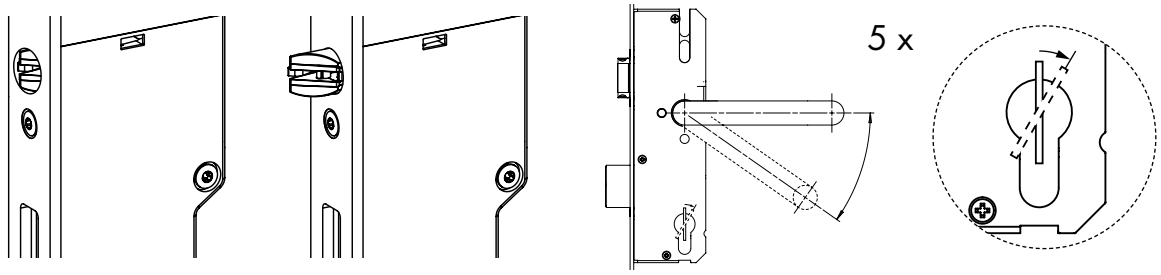

- Activate the lever handle several times (approx. 5x) or turn the key approx. 5x in the unlocking direction.
- The falling bolts must be able to extend again with ease.

5. Installation

5.1 Milling the door leaf for AS 3600 and AS 3600 TA

"4.4 Size variants" on page 19

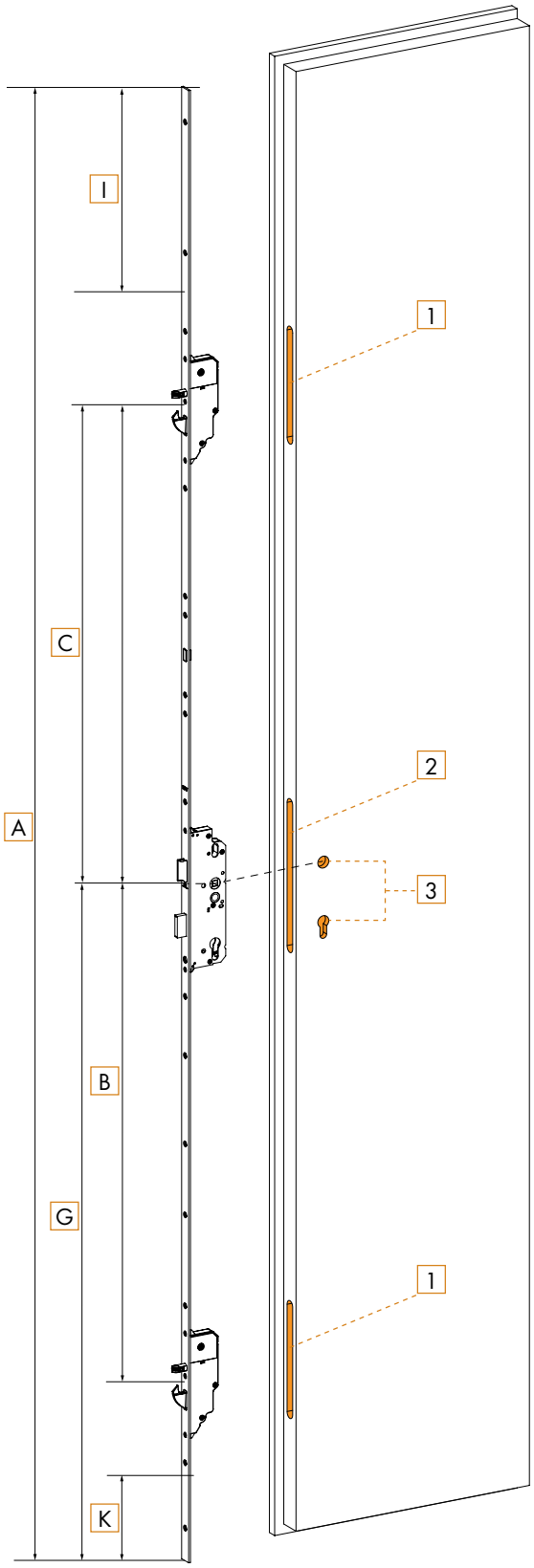

Auxiliary box

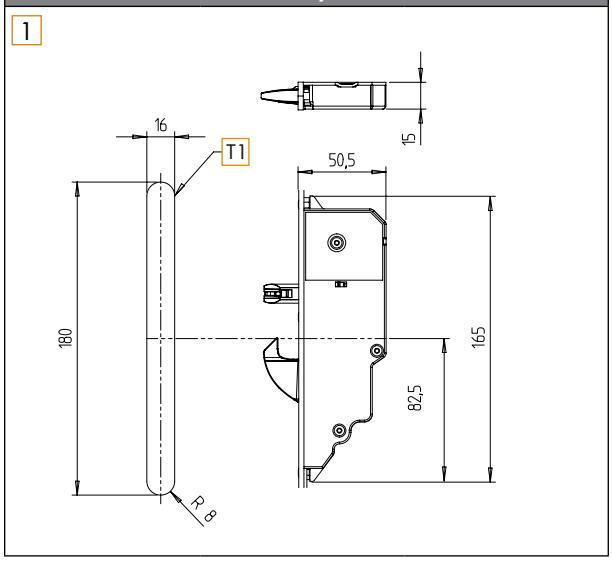

Main lock

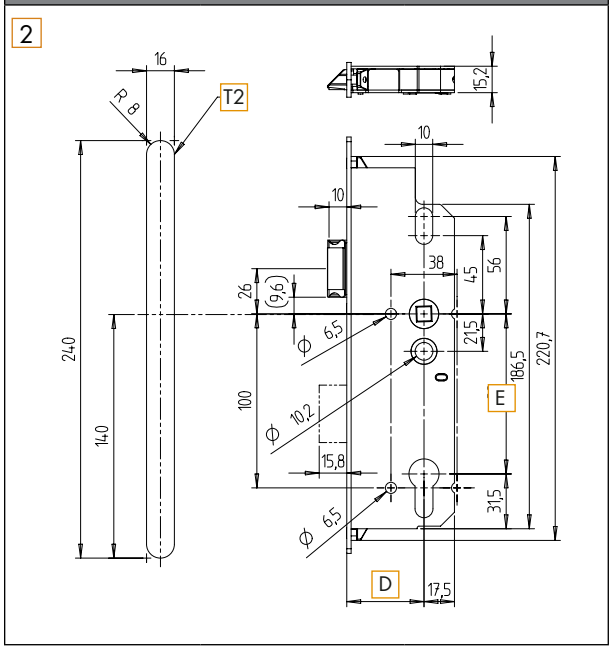

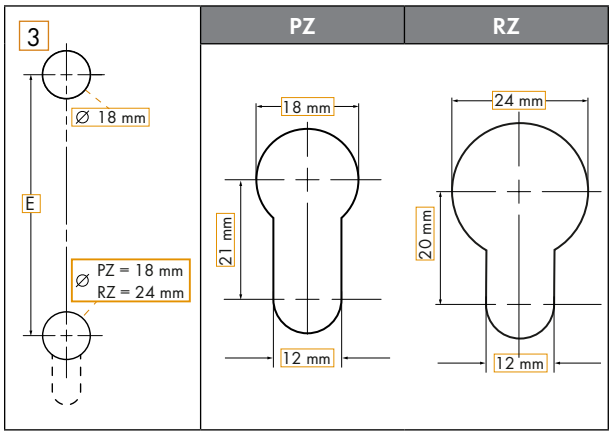

D Backset
T1 Timber route depth = 50.5 mm + 1 mm
T2 Timber route depth = backset + 17.5 mm
E Dimension depends on the version PZ = 92mm / RZ = 94 mm

5.2 Milling the door leaf for AS 3600 T4

"4.4 Size variants" on page 19

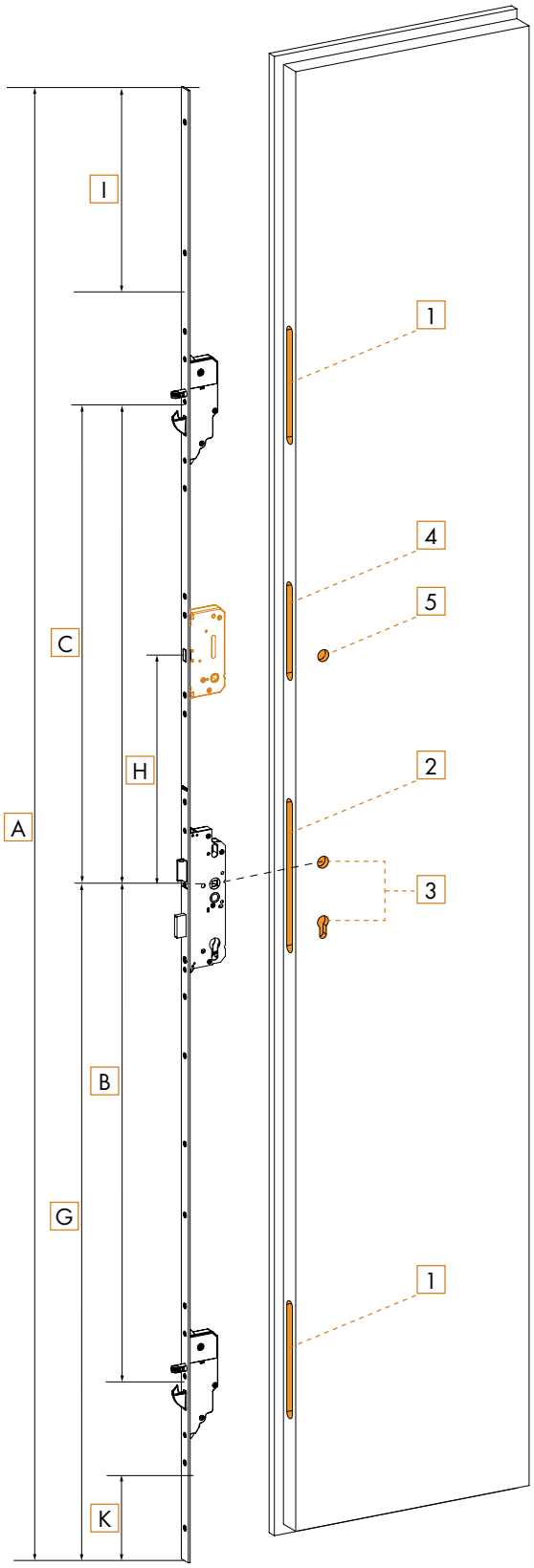

Safety lock T3/T4

4

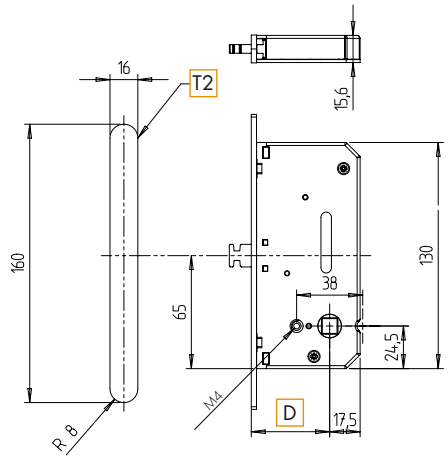

5

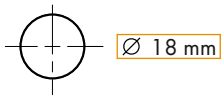

D Backset
T2 Timber route depth = backset + 17.5 mm

5.3 Milling the door leaf for AS 3600 with A-opener

"4.4 Size variants" on page 19

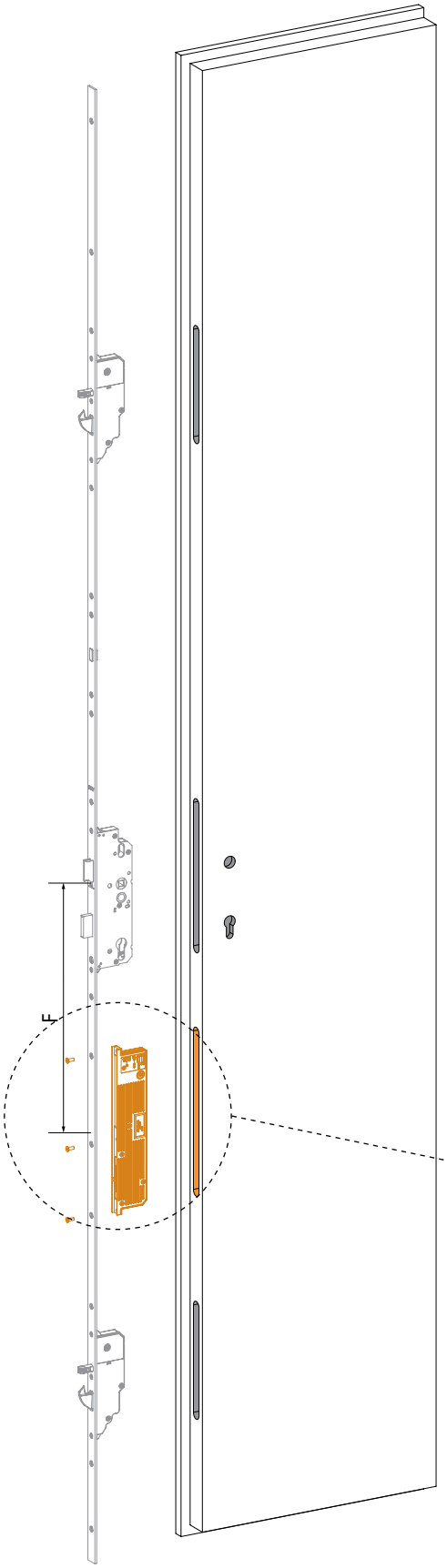

A-opener

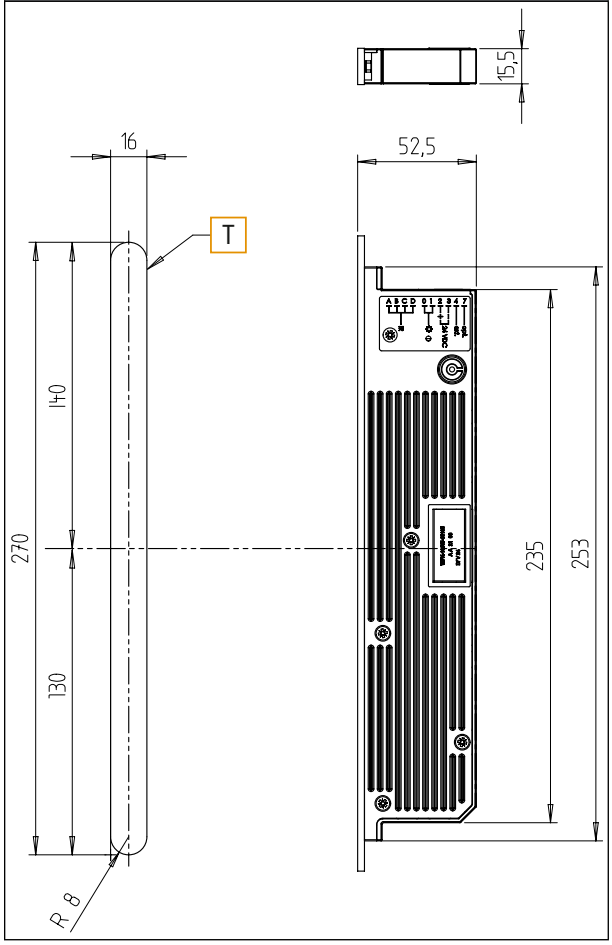

T Recommended timber route depth = 55 mm

Read the "A-opener" assembly instructions for the installation of the optional A-opener

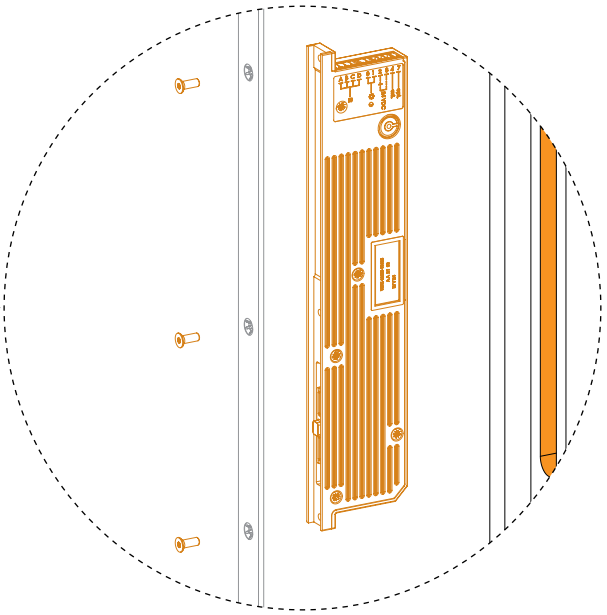

5.4 Milling the door leaf for AS 3600 with T3 safety lock

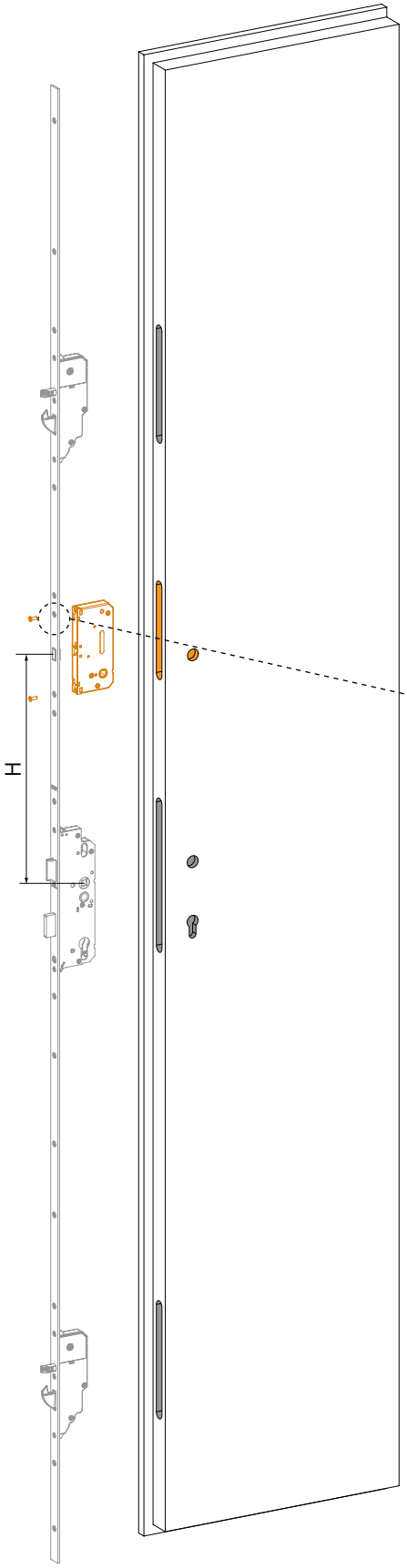

Milling T3 safety lock

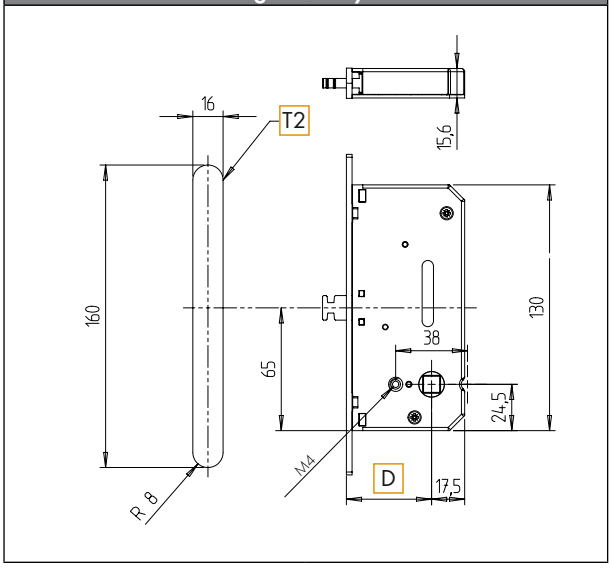

T Timber route depth = backset + rear backset + 1 mm

5.4.1 Installing the T3 safety lock

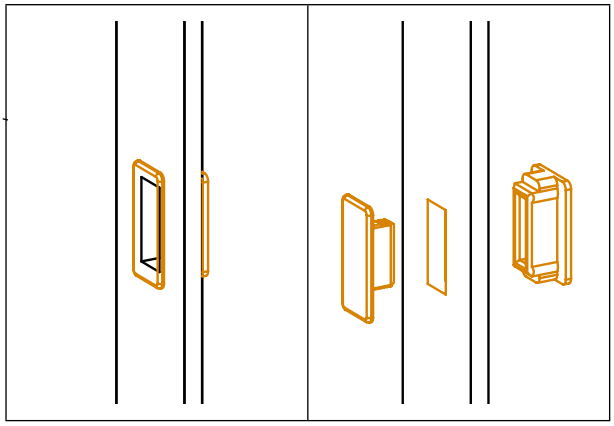

► Remove the cover for the T-break-through

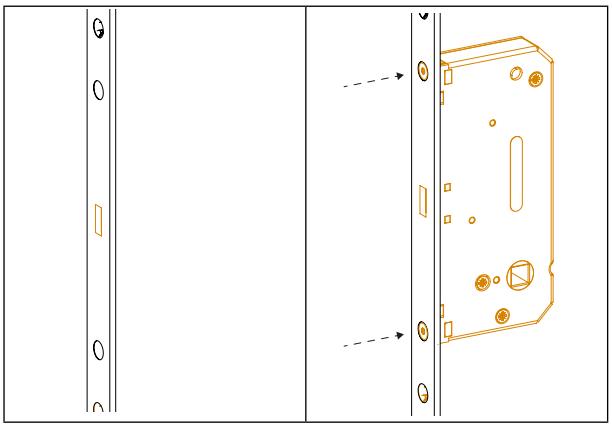

► Install T3 safety lock using the enclosed screws.

M4 x 11	TX10

5.4.2 Required accessories

For the T3 safety lock, separate frame parts with a security catch, especially designed for the relevant door system, are required. See multi-point locks and frame parts product catalogue.

Frame part with safety catch	T3 Safety lock
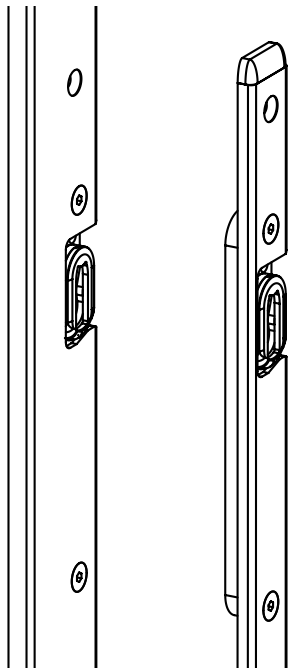	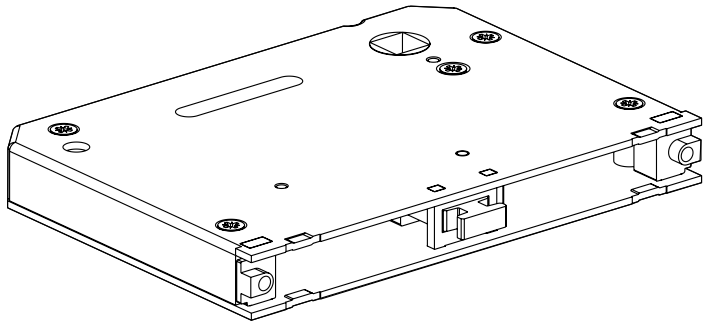

Material number	Material description	Backset	Contents (pieces)
3483983	ZSK 201-T3-8063/VS35—E	35 mm	1
3483984	ZSK 201-T3-8063/VS40—E	40 mm	1
3483985	ZSK 201-T3-8063/VS45—E	45 mm	1
3483986	ZSK 201-T3-8063/VS50—E	50 mm	1
3483987	ZSK 201-T3-8063/VS55—E	55 mm	1
3483988	ZSK 201-T3-8063/VS60—E	60 mm	1
3483989	ZSK 201-T3-8063/VS65—E	65 mm	1
3483990	ZSK 201-T3-8063/VS80—E	80 mm	1

A-opener

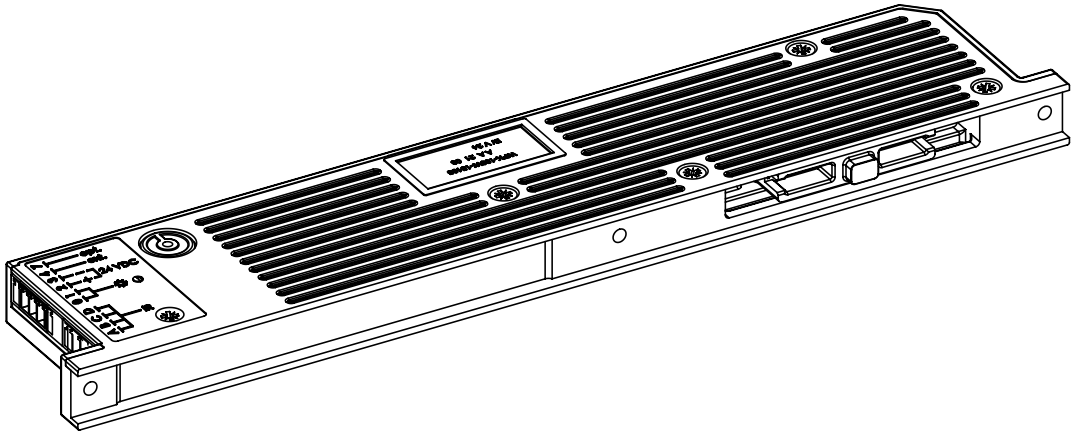

Material number	Material description	Contents (pieces)
3493787	F1060/A-opener 2.0	1

Read the "A-opener" assembly instructions for the installation of the optional A-opener.

An electromechanical opening is not possible if the main locking bar is excluded.

5.5 Screwing on the multi-point lock

The information on the number of screws required refers to the size variants B001.

AS 3600 B001	= 16 screws.
AS 3600 with A-opener	= 13 screws.
AS 3600 with T3/T4	= 14 screws.

Ensure when you insert the A-opener into the routed pocket that the cable is neither damaged nor kinked.

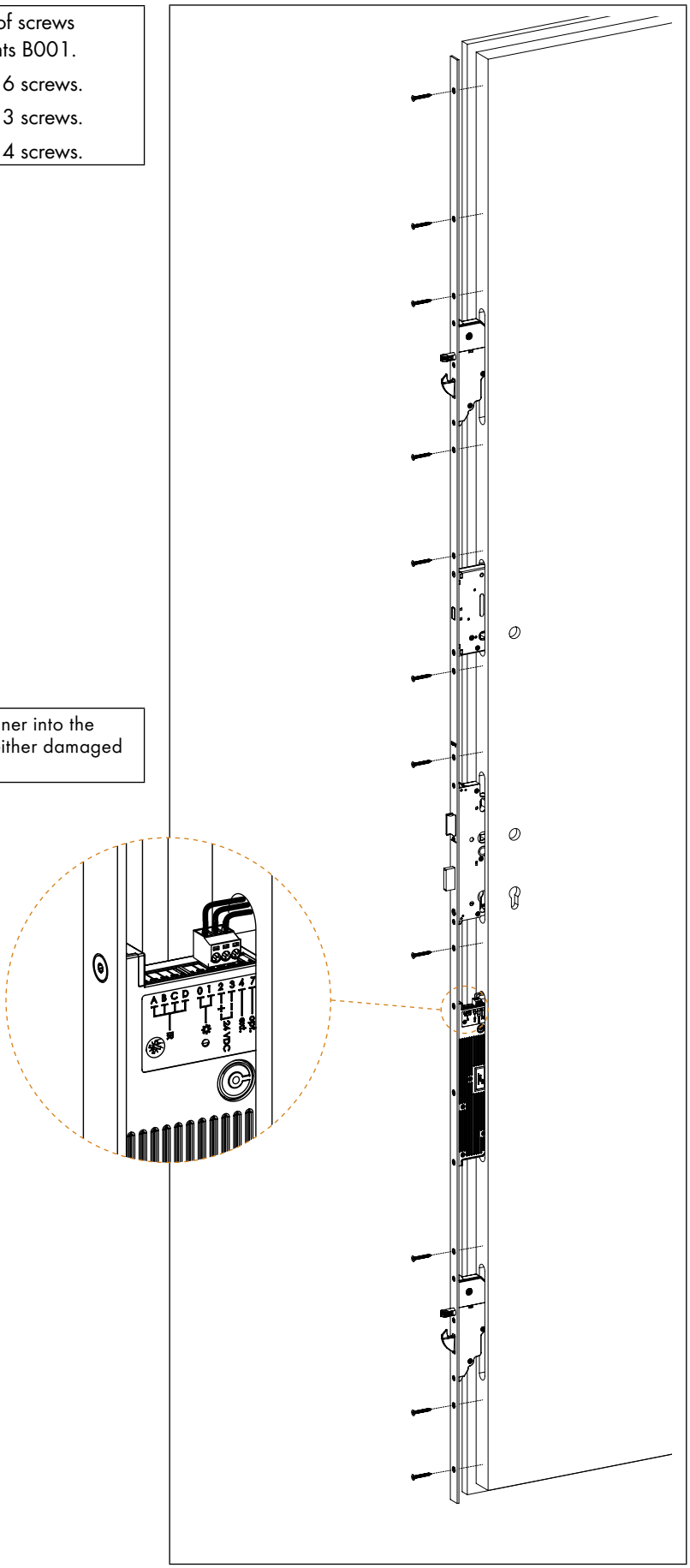

5.6 Milling the door frame

Milling for AS 3600

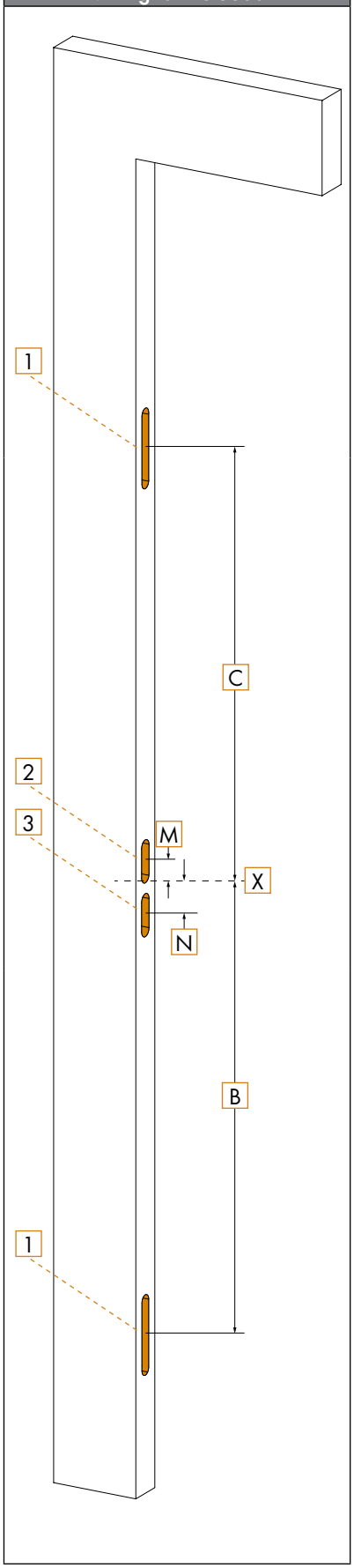

"4.4 Size variants" on page 19

The cutting dimensions given refer to:

ERH striker plate	main lock
Q striker plate	auxiliary box
T2 striker plate	safety lock
ERQT2H	
locking rail	

Contact the KFV customer service to find out the cutting dimensions for other frame parts or locking rails.

	1	2	3	4
	135	72	62 78*	155
	21	23	16 23.5*	21
Ø	16	16	16	16
	Groove depth from component + 1 mm			

* Milling dimensions for the insertion of a day latch

All dimensions from the lever handle height [X] to the centre groove length.

B	C	M	N	L
760	730	27.5	62.5	321

Milling for AS 3600 with T4

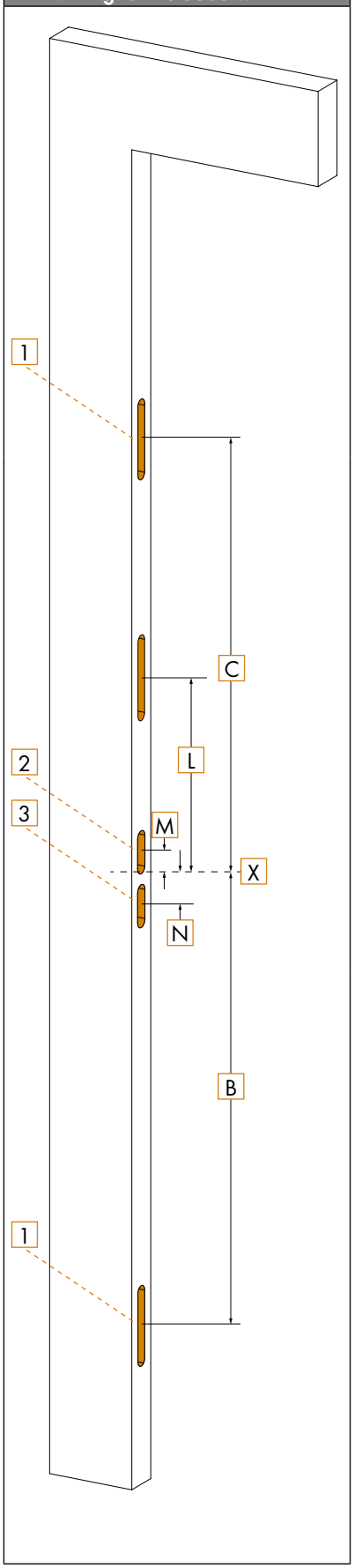

5.7 Assembling the door frame parts

Striker plates for AS 3600/AS 3600 TA

For AS 3600 TA, the AT piece must be exchanged for a day latch.
Milling according to dimensions "5.6 Milling the door frame" on page 28.

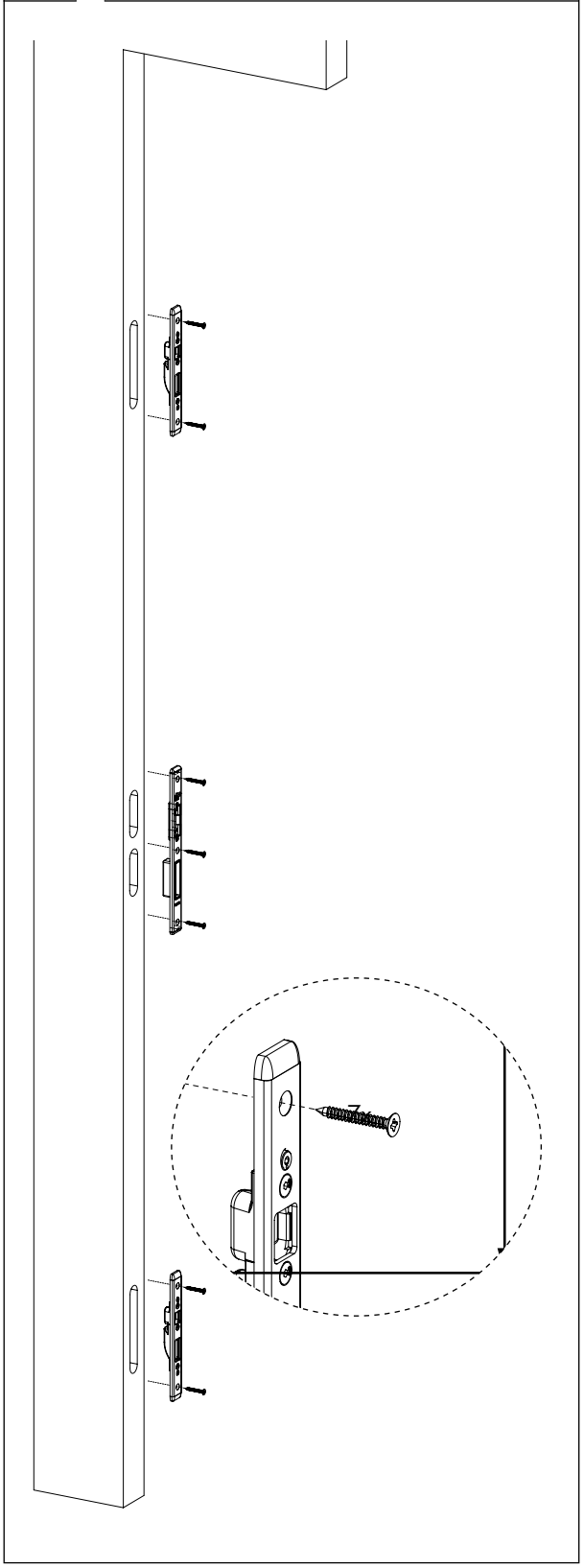

Striker plates for AS 3600 T4/T3

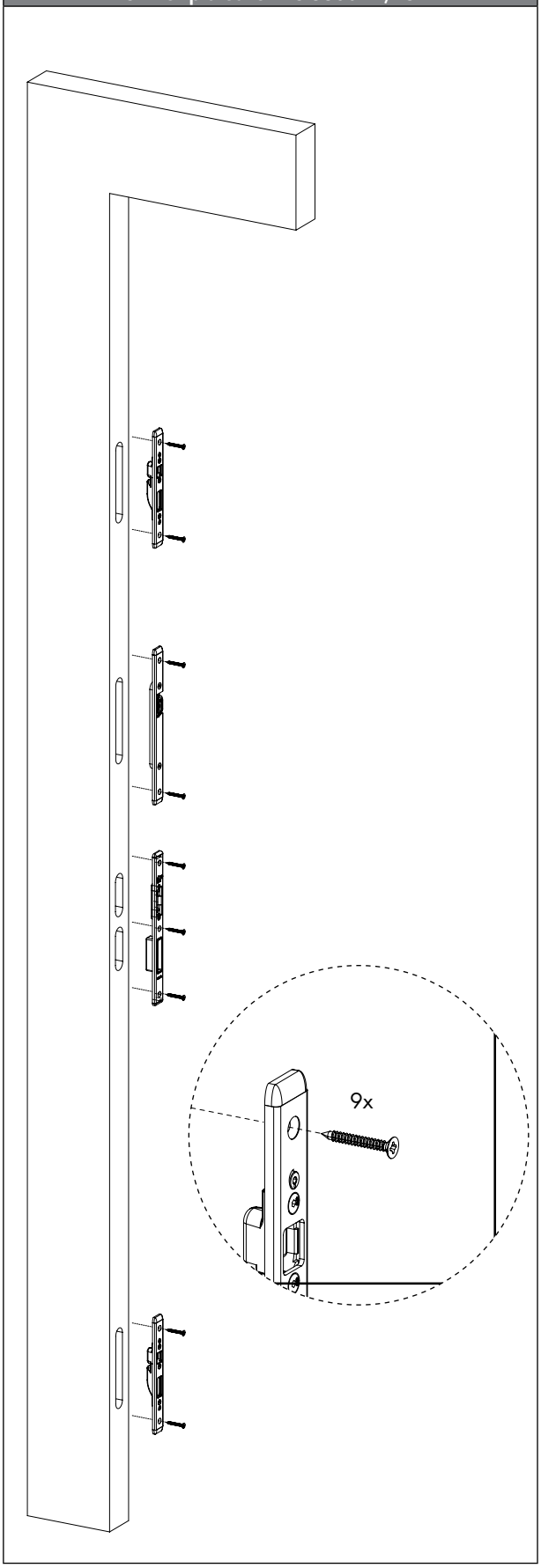

Locking rail AS 3600/AS 3600 TA

For AS 3600 TA, the AT piece must be exchanged for a day latch.
Milling according to dimensions "5.6 Milling the door frame" on page 28.

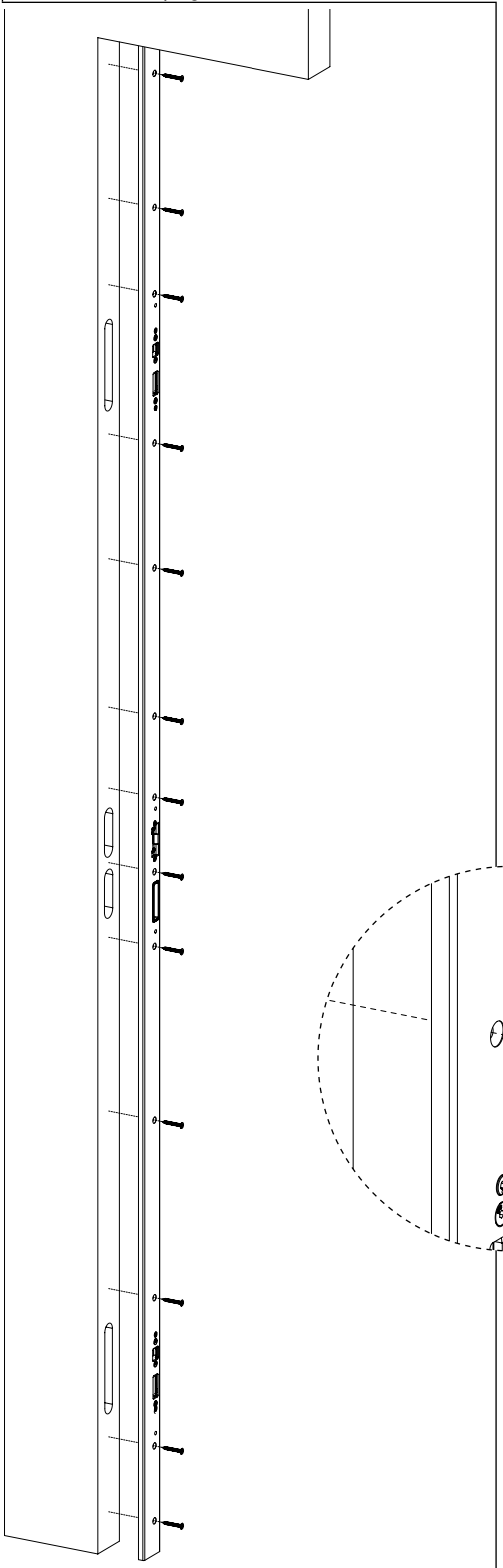

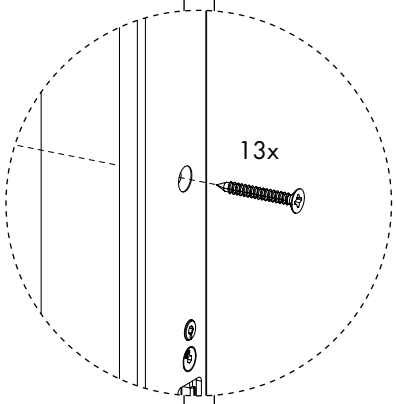

Locking rail for AS 3600 T4/T3

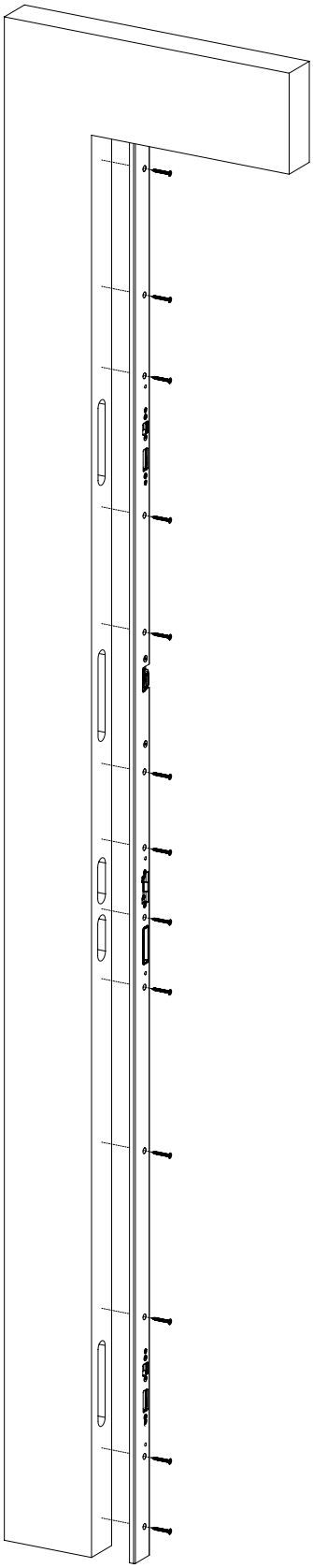

5.8 Adjustment of airgap

Adjust the airgap according to DIN 18251-3:
3.5 mm ± 1.5 mm

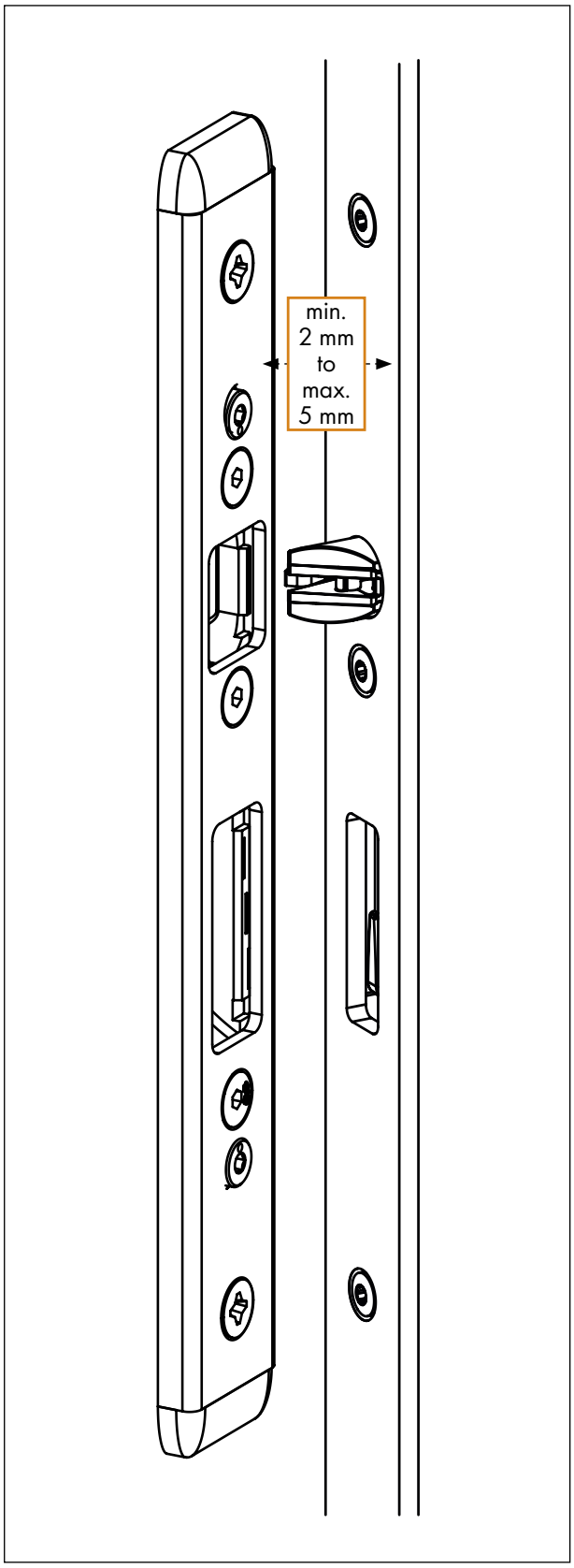

5.9 Adjustment of frame parts

5.9.1 Correct the Q adjustment

(Frame parts and locking rail are not included in the scope of delivery)

If activation via the cylinder lock is sluggish, the AT-piece (main lock latch) must be readjusted in the direction of the frame seal and the Q-adjustments in the opposite direction, see."Side adjustment of top part of AT-piece" on page 33.

Loosen the locking screws

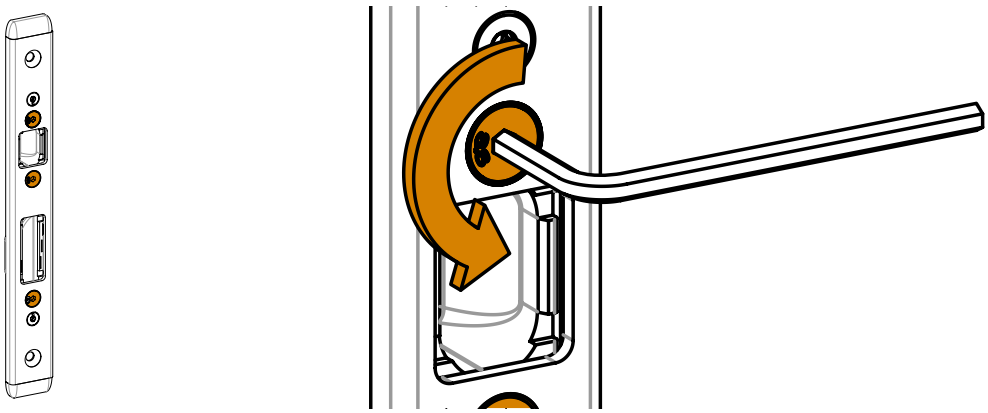

Side adjustment of the backing 2.5 mm in every direction

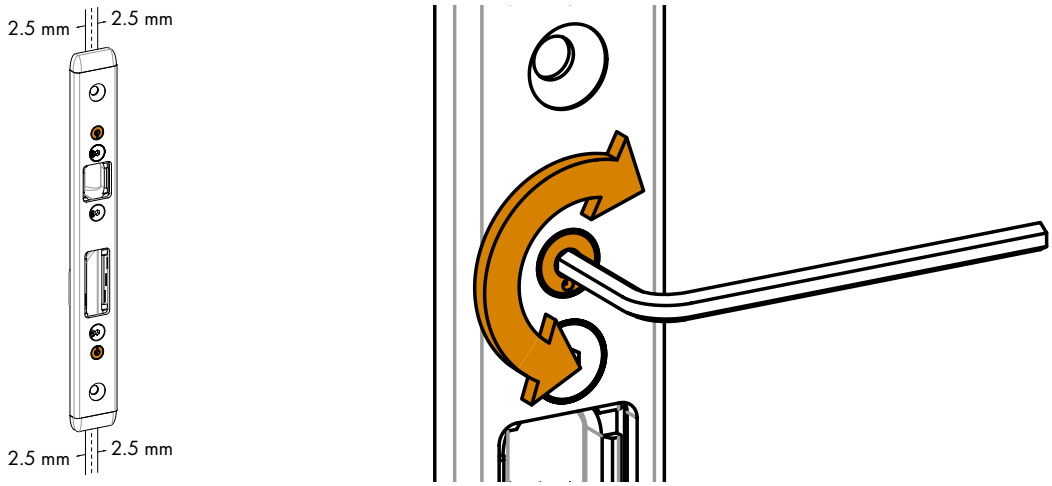

Tighten the locking screws

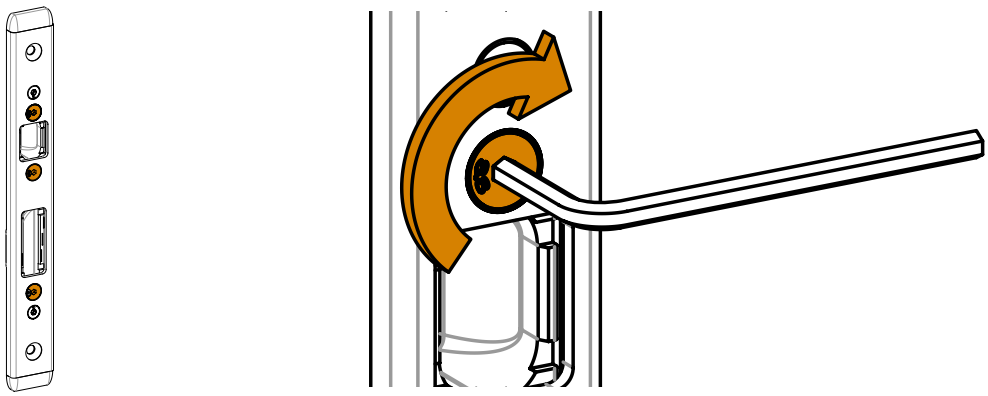

5.9.2 Adjustment of AT-piece

If activation via the cylinder lock is sluggish, the AT-piece [1] (main lock latch) must be readjusted in the direction of the frame seal and the Q-adjustments in the opposite direction.

The use of a KFV day latch e. g. 115A/B or a non energised E-opener is only permissible in combination with a AS 3600 multi-point lock with daytime release!
The daytime function of the day latch may only be activated if the daytime function of the multi-point lock is also activated. It is only then that the locking elements of the auxiliary boxes are in the release position.
The locking elements of the auxiliary boxes would absorb the transverse forces of the door when the daytime function of the day latch is activated and the daytime function of the **AS 3600 TA multi-point lock is deactivated**. This could lead to premature wear and tear and functional failure.

Loosen the locking screws

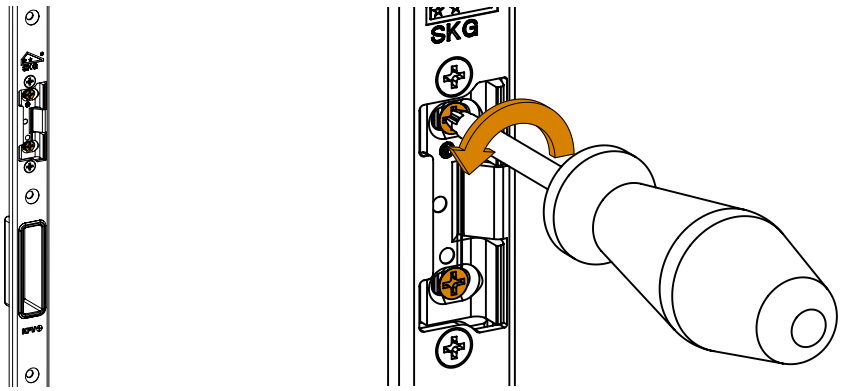

Side adjustment of top part of AT-piece

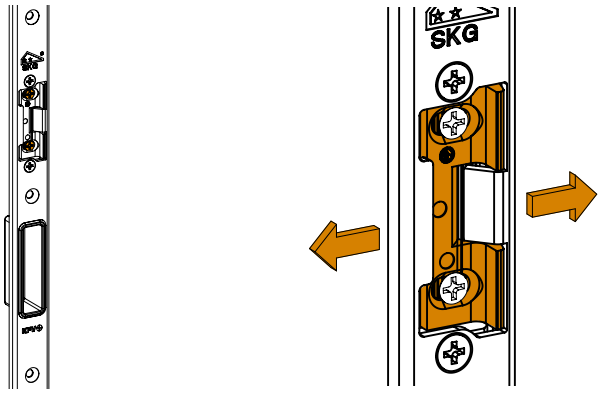

Tighten the locking screws

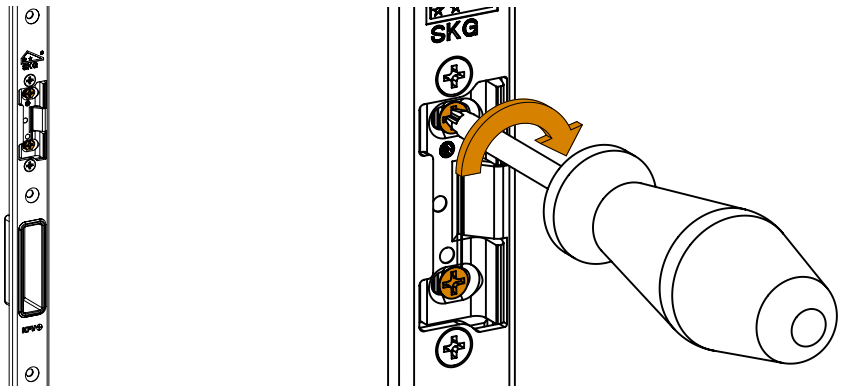

5.10 Transit support

Use the transit supports for transporting a pre-assembled door. These are included in the delivery of every AS 3600 multi-point lock and prevent the unlocking of falling bolts and hook bolts.

We also recommend block setting the door leaf for the transportation.

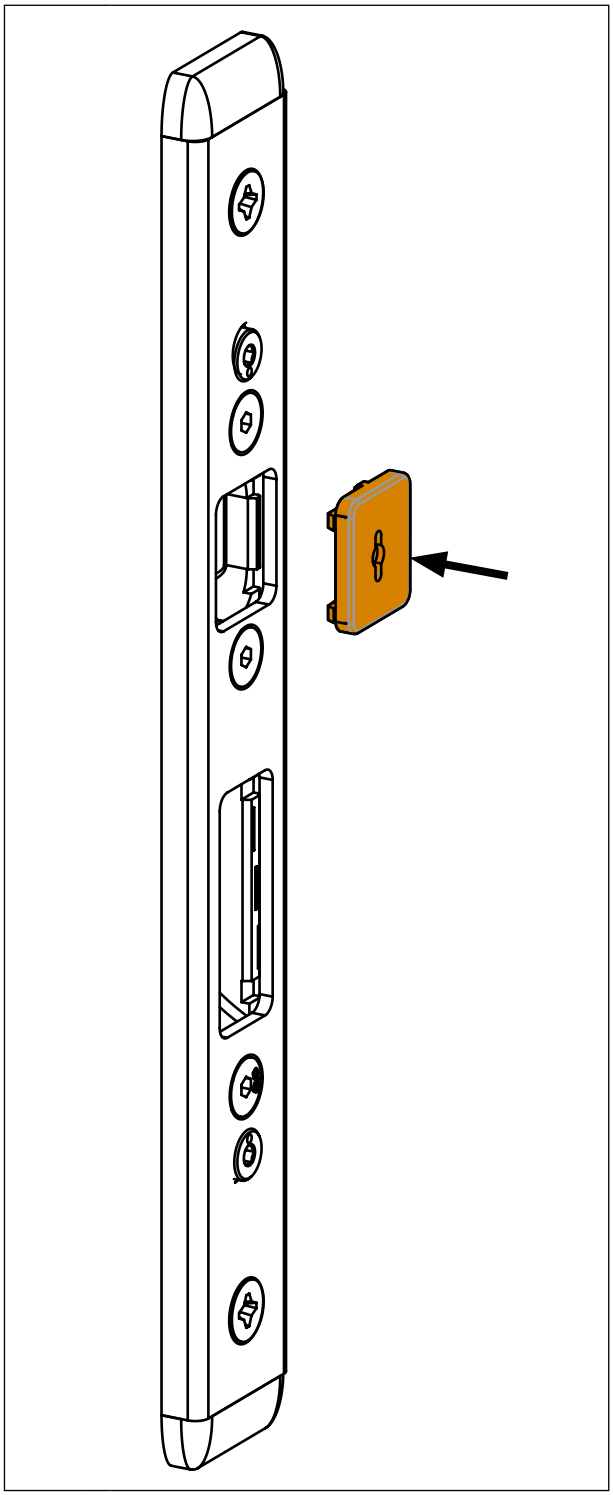

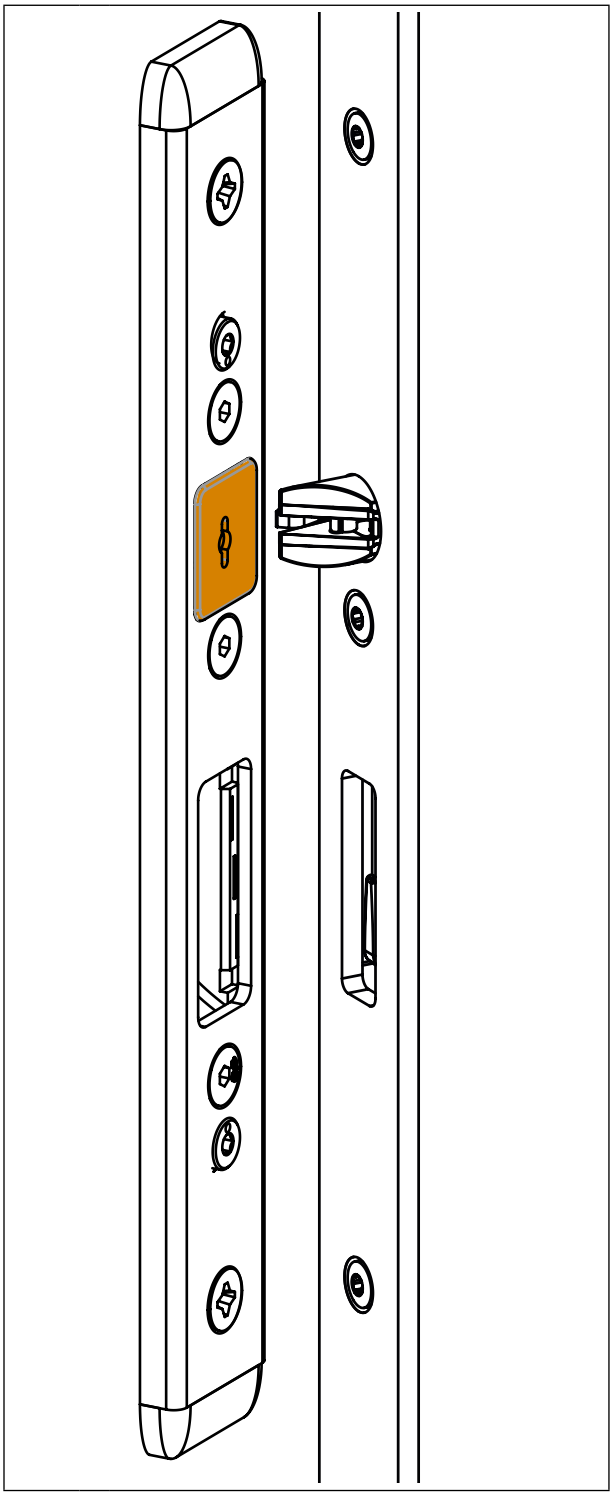

Remove the transit support

► Put a slot head screwdriver into the opening of the transit support and remove the support.

5.11 Functional test

5.11.1 General test for AS 3600, AS 3600 TA, AS 3600 T4

In order to check the functionality, the door and the door frame must be positioned vertically.

Check that all fixing screws are secure:

Adhere to the screw torque specified by the manufacturer.

► Use a screwdriver to ensure that all fixing screws are fully screwed in.

- Screws may not be inserted obliquely, the screw heads may not protrude.

Functional test when the door is open

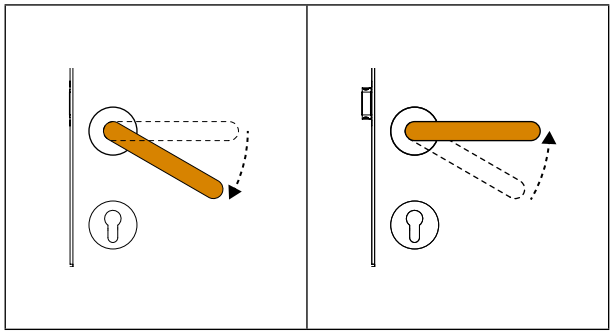

Check the functioning of the lever handle:

► Press the lever handle down fully and then let go.

The lever handle must return to its original position by itself.

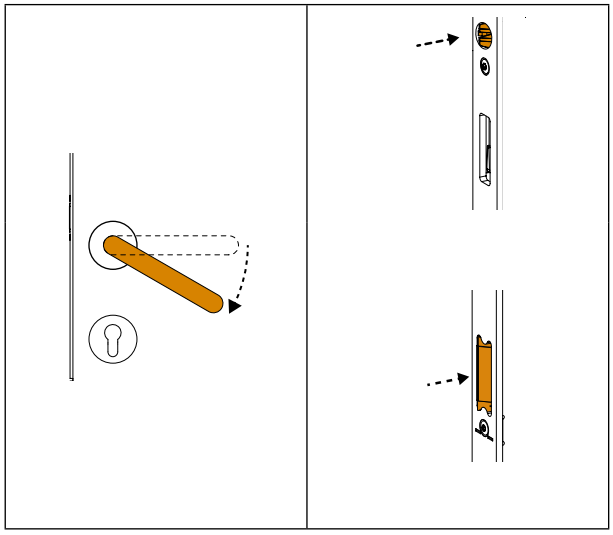

Check the function of the falling bolt and the main lock latch via the lever handle

► Press the lever handle down fully.

The falling bolt and main lock latch must move to the release position.

- When pressed in, the latches of the U-profile faceplate (material thickness 2mm) should only protrude a maximum of 2 mm.
- When pressed in, the latches of the flat face plate (material thickness 3mm) should protrude a maximum of 1 mm.
- When pressed in, the latches of the flat face plate (material thickness 2.5mm) should protrude a maximum of 1.5 mm.

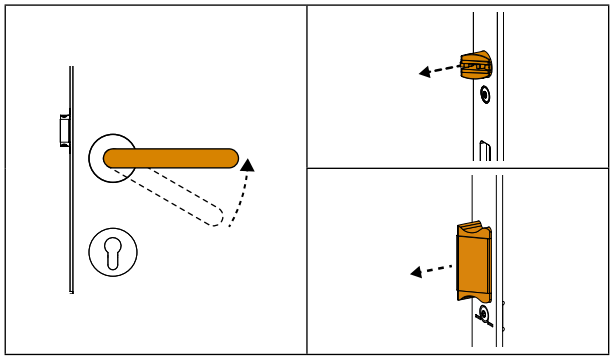

► Let go of the lever handle.

- The falling bolts must move to the trigger position.
- The main lock latch must extend fully.

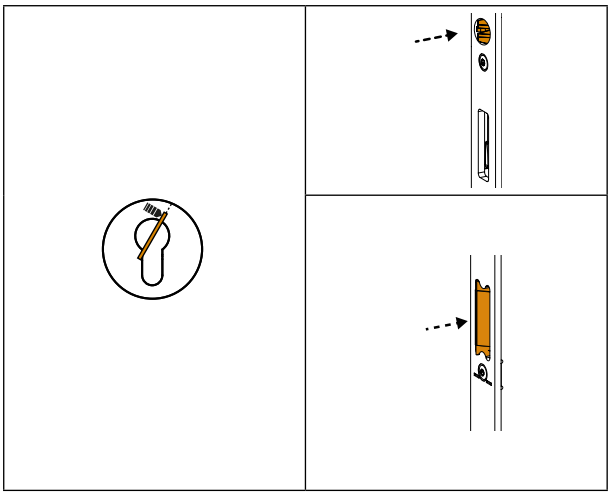

Check the function of the falling bolt and the main lock latch via the key:

► Turn and hold the key in the release position.

The falling bolt and main lock latch must move to the release position.

- When pressed in, the latches of the U-profile faceplate (material thickness 2mm) should only protrude a maximum of 2 mm.
- When pressed in, the latches of the flat face plate (material thickness 3mm) should protrude a maximum of 1 mm.
- When pressed in, the latches of the flat face plate (material thickness 2.5mm) should protrude a maximum of 1.5 mm.

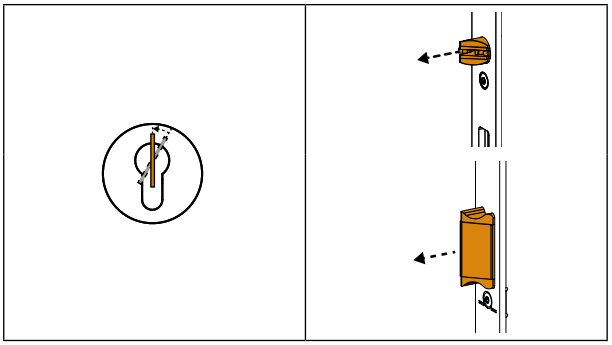

► Let go of the key.

- The falling bolts must move to the trigger position.
- The main lock latch must extend fully.

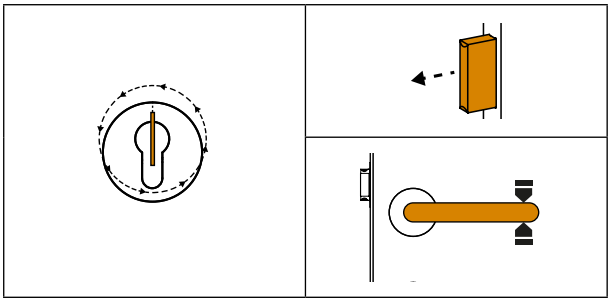

Check the functioning of the main lock bolt with the key:

► Turn the key once in the locking direction.

- The main lock bolt must move to the locking position.
- The lever handle must be blocked when the main lock bolt is extended.
- It must be possible to withdraw the key when the main lock bolt is extended.

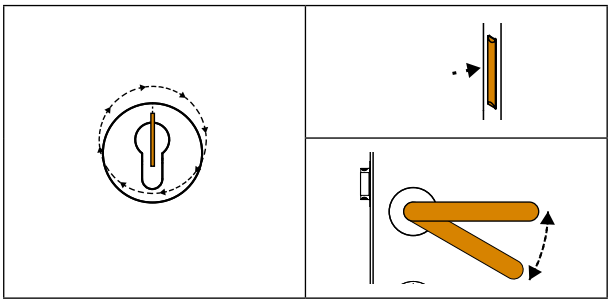

► Turn the key once in the release position.

- The main lock bolt must move to the release position.
- The lever handle must be freely movable when the main lock bolt is retracted.
- It must be possible to withdraw the key when the main lock bolt is retracted.

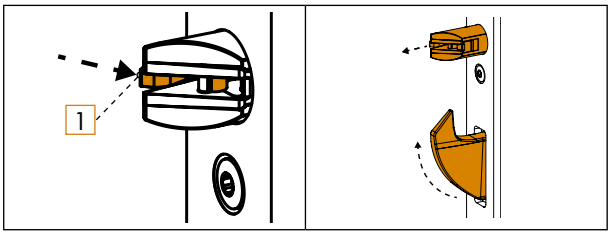

Check the automatic locking

► Release the automatic locking of the auxiliary boxes by hand. To do this, press the trigger [1] inwards.

- The falling bolt and the hook bolt must move fully to the locking position.

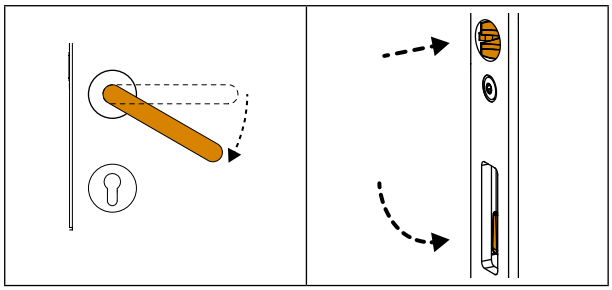

► Activate the lever handle.
- The falling bolt and the hook bolt must retract fully and automatically.

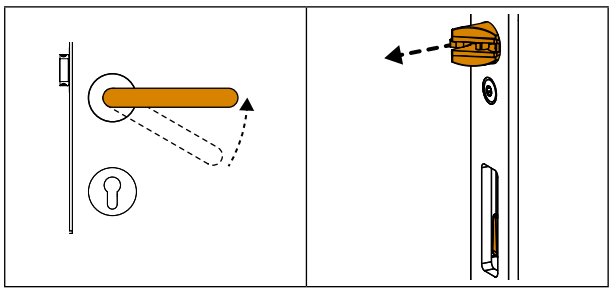

► Let go of the lever handle.
- The falling bolts must move to the trigger position.
- The hook bolt remains retracted.

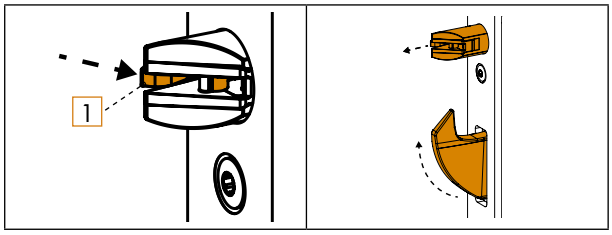

Check the automatic locking using the key

► Release the automatic locking of the auxiliary boxes by hand. To do this, press the trigger [1] inwards.
- The falling bolt and the hook bolt must move fully to the locking position.

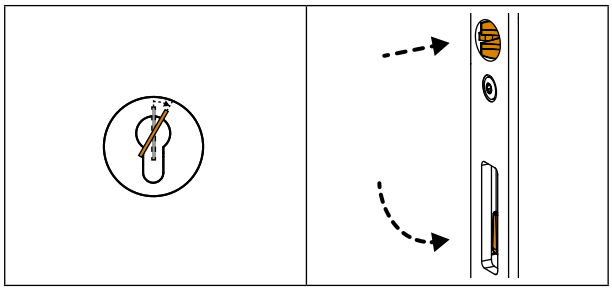

► Turn the key in the release direction.
- The falling bolt and the hook bolt must retract fully and automatically.

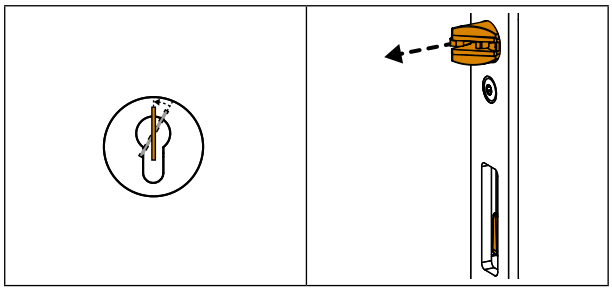

► Let go of the key.
- The falling bolts must move to the trigger position.
- The hook bolt remains retracted.

Functional test when the door is closed

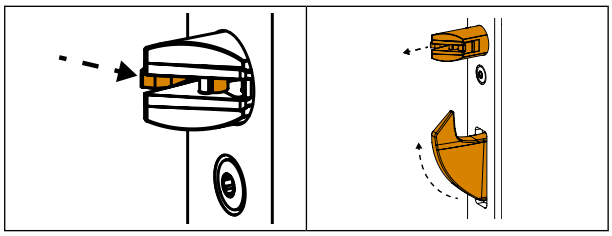

► Shut the door.
- The door must close easily.
- The automatic locking must trigger on contact with the frame part.
- The falling bolt and the hook bolt must extend fully and automatically.

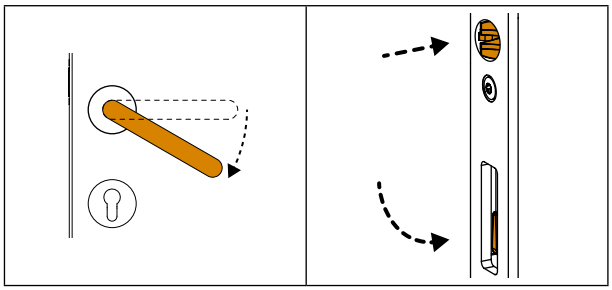

► Activate the lever handle and open the door.
- The falling bolt and the hook bolt must retract fully and automatically.
- The door must open easily.

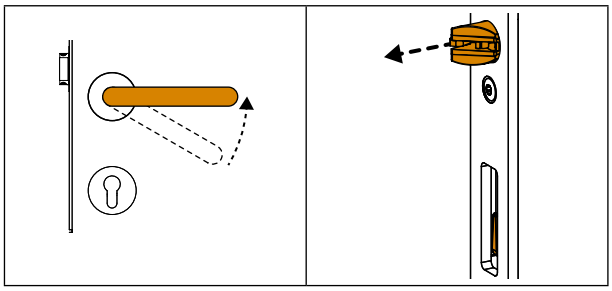

► Let go of the lever handle or the key.
- The falling bolts move to the trigger position.
- The hook bolt remains retracted.

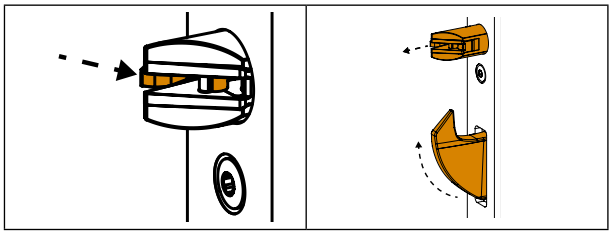

► Shut the door.
- The door must close easily.
- The automatic locking must trigger on contact with the frame part.
- The falling bolt and the hook bolt must extend fully and automatically.

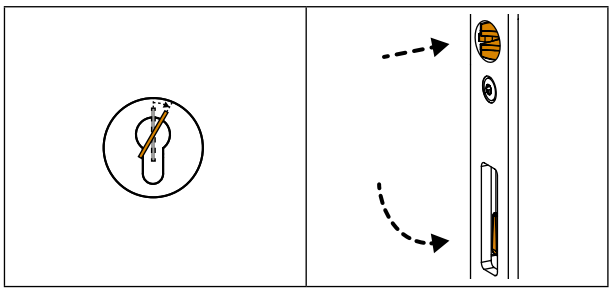

► Turn the key in the release direction.
- The falling bolt and the hook bolt must retract fully and automatically.
- The door must open easily.

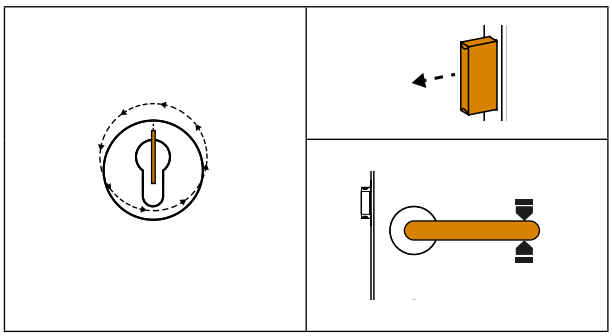

Check the main lock bolt

► Close the door and turn the key once in the locking direction.
- The main lock bolt must move easily to the locking position.
- The lever handle must be blocked when the main lock bolt is extended.
- It must be possible to withdraw the key when the main lock bolt is extended.

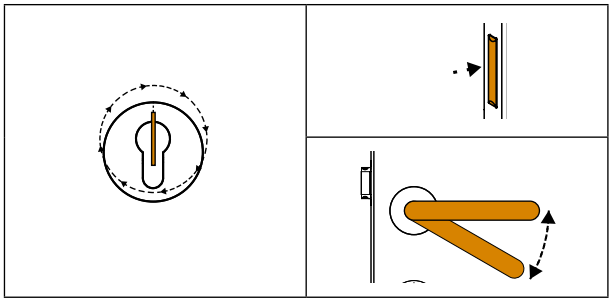

► Turn the key once in the release position.
- The main lock bolt must move to the release position.
- The lever handle must be freely movable when the main lock bolt is retracted.
- It must be possible to withdraw the key when the main lock bolt is retracted.

5.11.2 Checking the AS 3600TA daytime function

NOTE!

There is a risk of being locked out if the daytime release is not activated completely.

- If the door closes accidentally and the daytime release on the day latch is not activated, the main lock latch will engage and keep the door closed.
- If the door closes accidentally and the daytime release on the main lock bolt is not activated, the falling bolts and the hook bolts will move to the locking position.

The door can then only be opened from the outside with a key in both cases!

Both functions must always be activated.

NOTE!

Never close the main lock bolt in the locking position when the daytime function is activated.

- The daytime function will be deactivated in an improper manner if the main lock bolt is closed with the daytime function deactivated in the locking position. This will lead to premature wear and tear.

Before the main lock bolt may be closed in the locking position, The daytime release must be deactivated in accordance with the procedure described below.

Check daytime function activation/deactivation via the lever handle

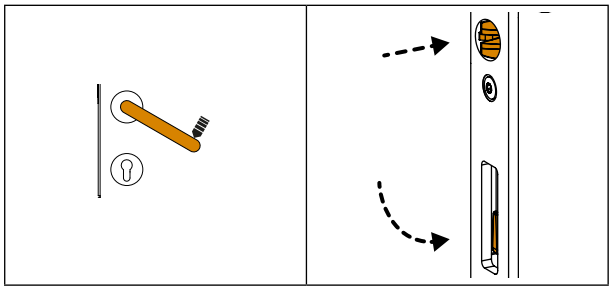

Check activation of the daytime function

► Press and hold down the lever handle.

- The falling bolt and main lock latch move to the release position.

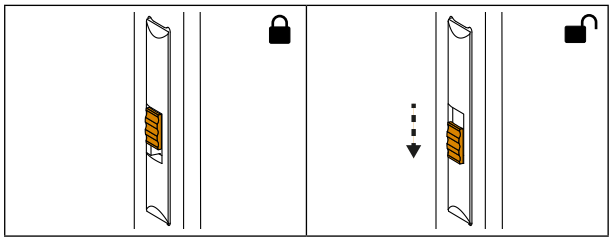

► Move the sliding handle in the main lock bolt downwards.

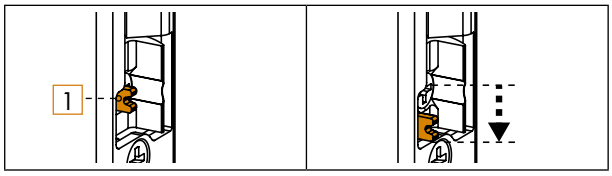

► Move the sliding handle [1] on the day latch from the inside to the outside.

- The day latch can pivot back in the release state.

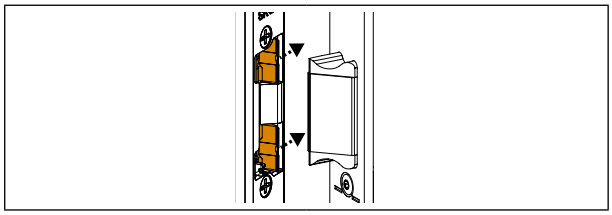

► Shut the door.

- The main lock latch must engage in the day latch.

► Press against the door in the opening direction.

- The day latch must pivot back and release the main lock latch.

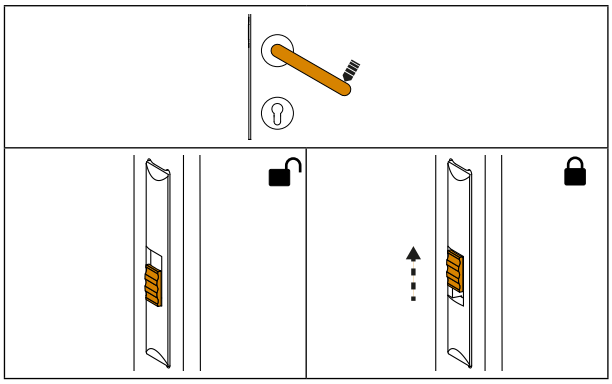

Check the deactivation of the daytime function

► Activate and hold down the lever handle

► Move the sliding handle in the main lock bolt upwards.

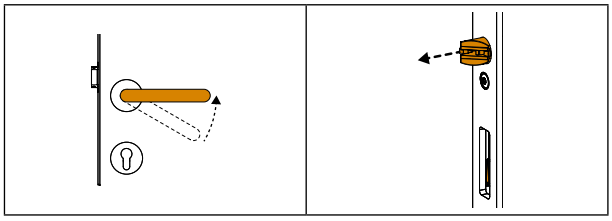

► Let go of the key.

- The falling bolts must move to the trigger position.
- The hook bolts must remain in the release position.

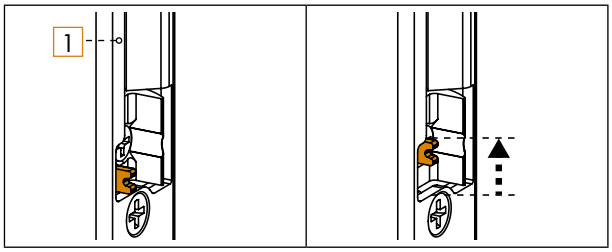

► Move the sliding lever [1] on the day latch from the outside to the inside.

- The day latch must be blocked in the locked state.

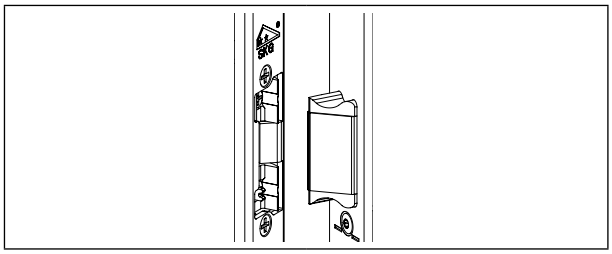

► Shut the door.

- The main lock latch must engage in the day latch.
- Falling bolt and hook bolt must move to the locking position.

Check daytime function activation/deactivation via the key

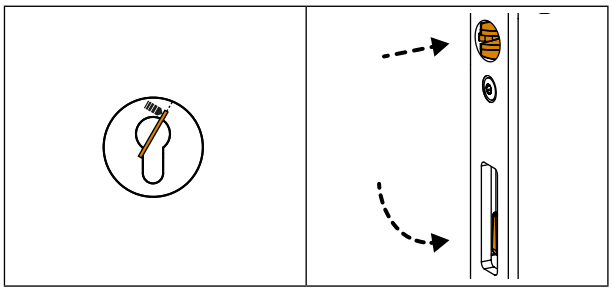

Check activation of the daytime function

► Turn and hold the key in the release position.

- Falling bolt and hook bolt move to the release position.

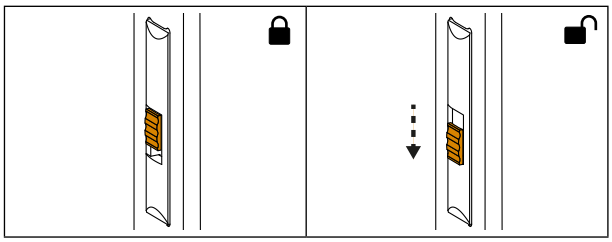

► Move the sliding handle in the main lock bolt downwards.

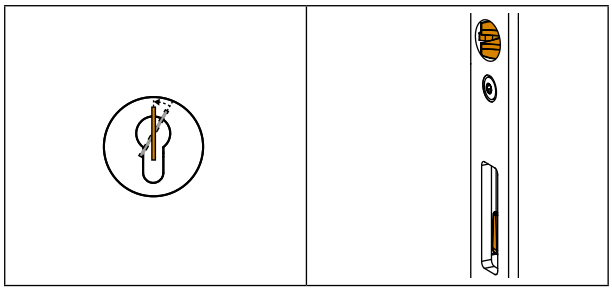

► Let go of the key.
- The falling bolts must remain retracted.
  The automatic locking must not trigger.

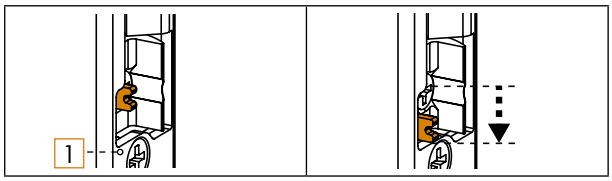

► Move the sliding handle [1] on the day latch from the inside to the outside.
- The day latch can pivot back in the release state.

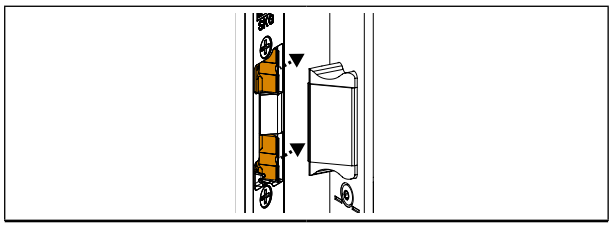

► Shut the door.
- The main lock latch must engage in the day latch.

► Press against the door in the opening direction.
- The day latch must pivot back and release the main lock latch.

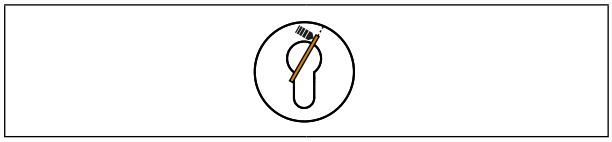

Check the deactivation of the daytime function

► Turn and hold the key in the release position.

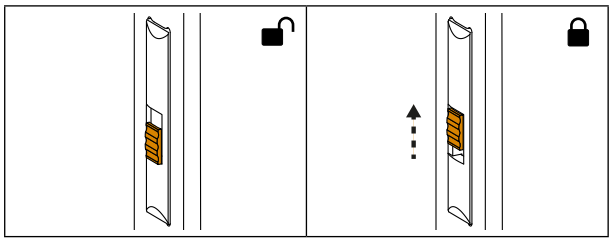

► Move the sliding handle in the main lock bolt upwards.

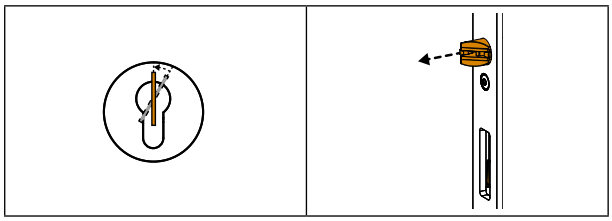

► Turn the key to the withdrawal position.
- The falling bolts must move to the trigger position.
- The hook bolts must remain in the release position.

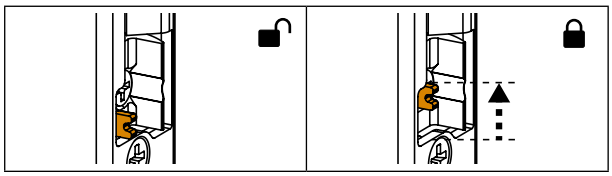

► Move the sliding lever [1] on the day latch from the outside to the inside.
- The day latch must be blocked in the locked state.

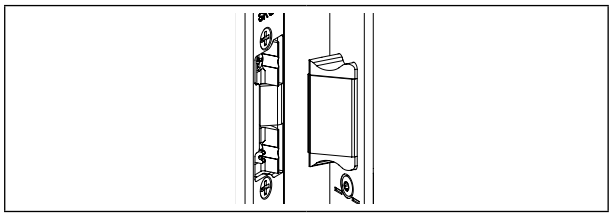

► Shut the door.
- The main lock latch must engage in the day latch.
- Falling bolt and hook bolt must move to the locking position.

5.11.3 Checking the AS 3600 T4/T3 door arrester

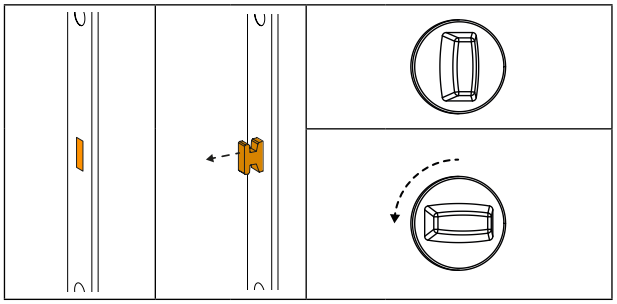

Check deadbolt

► Turn the olive 90° in the locking direction.

- The deadbolt must extend easily.

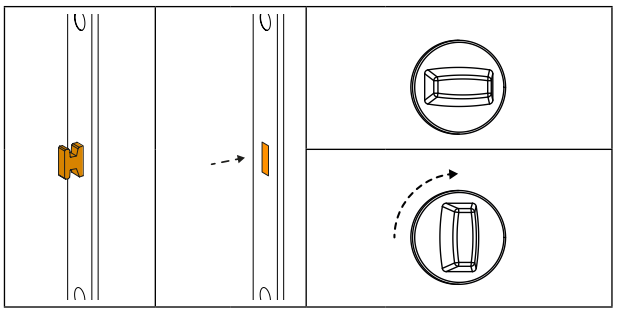

► Turn the olive 90° in the release position.

► The deadbolt must retract easily.

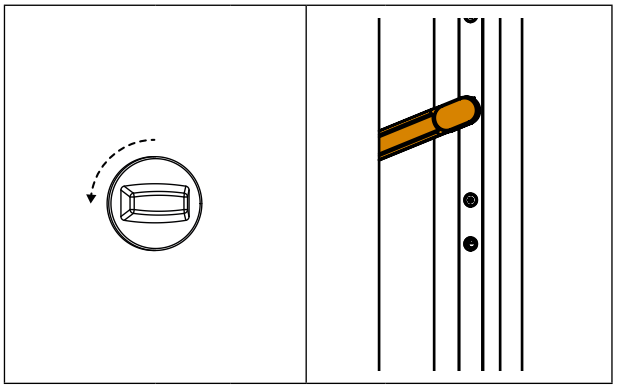

Check the opening and closing with the olive

► Shut the door.

► Turn the olive 90° in the locking direction.

- The deadbolt must grip into the safety catch.

► Open the door.

- The opening gap of the door must be securely restricted by the safety catch.

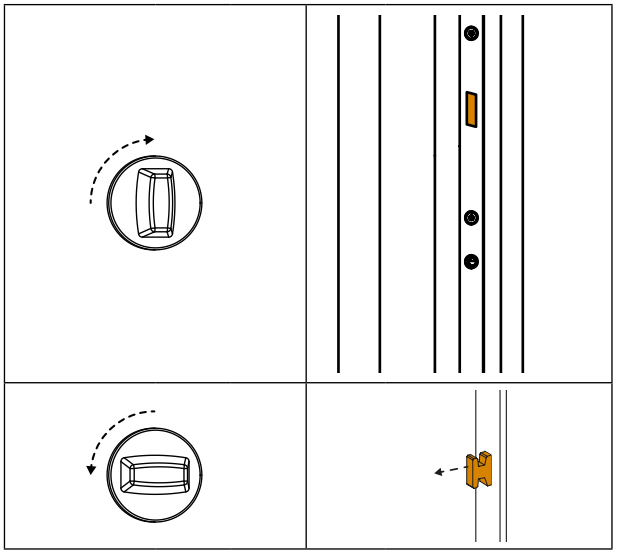

- Shut the door.

► Turn the olive 90° in the release direction.

- The deadbolt must release the safety catch.

► Open the door.

- The door must open easily and fully.

Opening the T4 safety lock with the key.

► Turn the olive 90° in the locking direction.

- The deadbolt must grip into the safety catch.

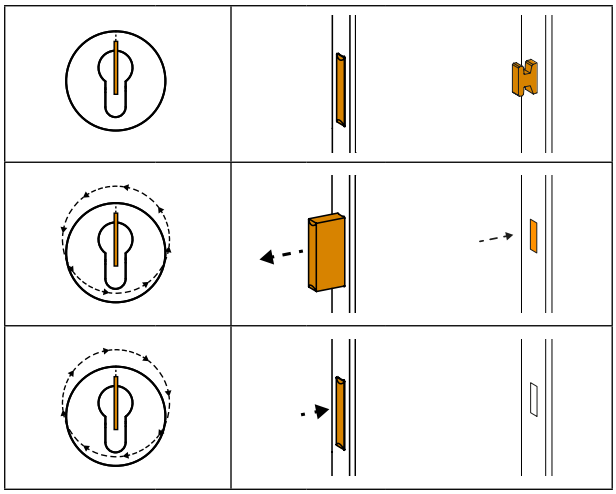

Releasing the T4 safety lock when the main lock bolt is released using the key.

► Turn the key in the locking direction.
- The deadbolt of the safety lock moves to the release position.

► Turn the key in the release direction.
- The door must open easily and fully.

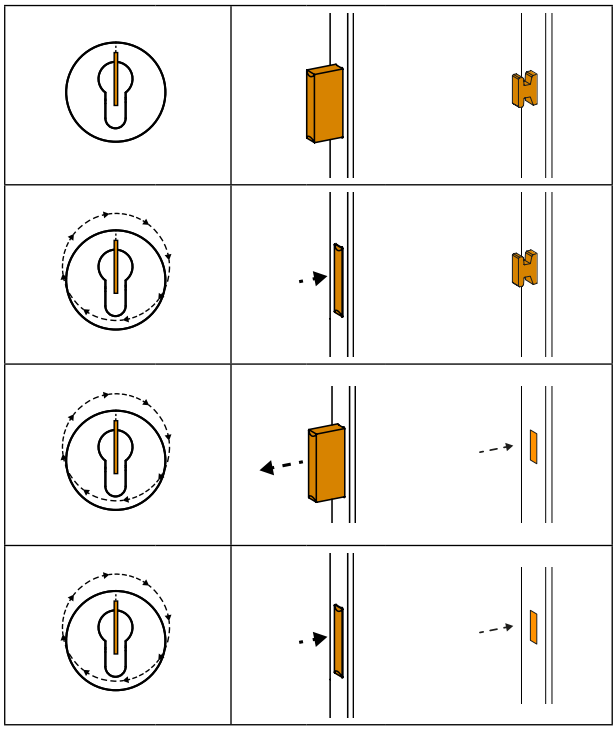

Releasing the T4 safety lock when the main lock bolt is locked using the key.

► Turn the key in the release direction.
- The main lock bolt moves to the release position.

► Turn the key in the locking direction.
- The main lock bolt moves to the locking position.
- The deadbolt of the safety lock moves to the release position.

► Turn the key in the release direction.
- The door must open easily and fully.

5.11.4 Checking the A-opener

► Shut the door.
- The automatic locking is triggered, the falling bolt and hook bolt move to the locking position.

► Activate the button or the installed access control system.
- The A-opener draws the falling bolt, hook bolt and the main lock latch into the release position and the door can be opened.

5.11.5 Troubleshooting

Functional disorder of the lever handle

If the lever handle does not return to its original position by itself, there is a functional disorder.

► Check the routed pocket for dimensional accuracy.
► Check that the lever handle is correctly seated.
► Check that the door hardware is correctly seated.

If the lever handle does not return to its original position by itself, the multi-point lock must be checked by KFV.

Functional disorder of the profile cylinder

► If you cannot remove the key, dismount the profile cylinder and check it for functional disorders.
► If the profile cylinder does not function faultlessly, replace the cylinder and repeat the test step.
► If the profile cylinder functions faultlessly, there is a mechanical disorder in the multi-point lock.

The multi-point lock must be checked by KFV.

Functional disorder of the locking elements of the main lock

There is a functional disorder if the locking elements do not move easily.

► Check the routed pocket for dimensional accuracy.
► Check that the multi-point lock is correctly seated.
► Check that the frame parts are correctly seated.

If this sluggishness persists, the multi-point lock must be checked by KFV.

Functional disorder of the locking elements of the auxiliary boxes

There is a functional disorder if the locking elements do not move easily or do not extend and retract fully.

► Check the routed pocket for dimensional accuracy.
► Check that the multi-point lock is correctly seated.
► Check that the frame parts are correctly seated.
► Check that the drive rods can move freely.

If this sluggishness persists, the multi-point lock must be checked by KFV.

Functional disorder of the A-opener

There is an electrical disorder if the A-opener does not start when the button/access control system is activated.

► Check the the cable connections are correctly routed.
► Check the cable for damage.
• Damaged cables must be replaced.

If the disorder persists, the A-opener must be checked by KFV.

SIEGENIA®
brings spaces to life

A company of the SIEGENIA GROUP
KFV Karl Fliether GmbH & Co. KG
Siemensstraße 10
42551 Velbert
GERMANY

Phone: +49 2051 278-0
Fax: +49 2051 278-167
info@siegenia.com
www.siegenia.com

You can find address details for our international sites at: www.siegenia.com

SIEGENIA worldwide:
Austria Phone: +43 6225 8301
Belarus Phone: +375 17 3143988
Benelux Phone: +31 85 4861080
China Phone: +86 316 5998198
France Phone: +33 3 89618131
Germany Phone: +49 271 39310
Great Britain Phone: +44 2476 622000
Hungary Phone: +36 76 500810
Italy Phone: +39 02 9353601
Poland Phone: +48 77 4477700
Russia Phone: +7 495 7211762
South Korea Phone: +82 31 7985590
Switzerland Phone: +41 33 3461010
Turkey Phone: +90 216 5934151
Ukraine Phone: +38 044 4054969

Contact your dealer:

11.2017
H39.MFVRS002EN-01