# COMPONENTS CATALOGUE

## H12 / H4 / PVC / ALU16

SIEGENIA®
brings spaces to life

# TITAN AF

Window systems

Door systems

Comfort systems

| | | |
|---|---|---|
| Overview | | |
| Hinge parts | Hinge side TITAN PVC/ALU16 | 1.1 |
| | Hinge side TITAN (H) timber | 1.2 |
| | Hinge side Si-line (H) timber | 1.3 |
| | Hinge side axxent 24+ | 1.4 |
| | Hinge side axxent SE | 1.5 |
| Corner parts | Corner drives | 2.1 |
| | Locking bolts / Locking parts | 2.2 |
| Gears | Gear 15 | 3.1 |
| | Gear 7 | 3.2 |
| | Secondary sash gear 16 | 3.3 |
| | Secondary sash gear 8 | 3.4 |
| | Gear OS, OS/PZ | 3.5 |
| | Door gear | 3.6 |
| | Gear DF | 3.7 |
| | Special gear | 3.8 |
| Extension parts | | |
| Stay parts | | |
| Accessories | Accessories | 6.1 |
| | GLOBE handle range | 6.2 |
| | Si-line handle range | 6.3 |
| Frame parts | | |

| | |
|---|---|
| | |
| 1 | |
| 2 | |
| 3 | |
| 4 | |
| 5 | |
| 6 | |
| 7 | |

## Overview


| | | |
|---|---|---|
| Overview | H45.TITA000S002EN | 3 |
| Symbols and abbreviations | H45.TITA000S001EN | 4 |
| Material numbers key | H45.TITM000S001EN | 7 |


## Profile cross-sections


| | | |
|---|---|---|
| Timber 12 mm | H45.TITPH20S001EN | 9 |
| Timber 12 mm Hinge side axxent 24+ | H45.TITPH20S003EN | 13 |
| Timber 4 mm | H45.TITPH40S001EN | 15 |
| PVC | H45.TITPKF0S001EN | 18 |
| Aluminium with 16 mm BAN | H45.TITPALU0S001EN | 19 |

## Directives of the Trade Organisation for Locks and Fittings (Gütegemeinschaft Schlösser und Beschläge e. V.)

The directives of the Trade Organisation for Locks and Fittings provide comprehensive information on the correct operation and maintenance of hardware for windows and portal doors.

Compliance with these guidelines is mandatory

You can find the latest versions of the directives, in a range of languages, at:

guetegemeinschaft-schloss-beschlag.de/Pruefen-Zertifizieren/Richtlinien

**TBDK – Attachment of supporting fitting components for turn-only and tilt & turn fittings**

with definitions for turn-only and tilt & turn fittings and their possible installation positions

**VHBH – Hardware for windows and balcony doors**

Guidelines/advice on the product and on liability

**VHBE – Hardware for windows and balcony doors**

Guidelines/advice for end-users

**FPKF – Restrictor and cleaning stays for tilt-only sashes and tilt-only fanlights**

Use of restrictor and cleaning stays

**FBDF – Casement stoppers for variable rotational position of window sashes**

Casement stoppers that are controlled via the central locking system - definitions and tests

## Further relevant documents

You can find further relevant documents, for example:

- structural design charts
- assembly instructions
- profile spec sheets
- individual component sheets
- maintenance
- operating and care instructions

on our Mediacenter:

downloads.siegenia.com/

## Element materials

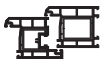

Element material PVC

Element material timber

Element material aluminium

## Opening types

Rectangular turn-tilt element

2-sash rectangular turn-tilt/turn elementt

Rectangular turn element

2-sash rectangular turn/turn element

Rectangular tilt element

Arched-head turn-tilt element

2-sash arched-head turn-tilt/turn element

Rounded-head turn-tilt element

2-sash rounded-head turn-tilt/turn element

Angled turn-tilt element

Triangular turn-tilt element

## Symbols

Height adjustment

Side adjustment

Compression adjustment

## Dimensions

All dimensions are nominal values and include the general tolerances.

All nominal values are given in mm.

## Weights

All weights refer to the maximum sash weight.

| | |
|---|---|
| **70** | locking distance 700 mm |
| **.../A** | croppable component |
| **.../G** | counter |
| **.../K** | consistent component length |
| **...+** | component to slide underneath |
| **16/2** | fitting groove 16 x 2 mm |
| **A0175** | hinge clearance through sash |
| **A0245** | suitable for use with threshold |
| **AB** | start of bow begin arch |
| **ADV** | adjustable compression |
| **AF** | automated manufacturing |
| **AWD** | application diagram |
| **bag** | bag |
| **BAN** | hardware groove |
| **BS** | hinge side |
| **BSO** | hinge side, top |
| **BSU** | hinge side, bottom |
| **BSW** | threshold |
| **CG** | glass deduction dimension |
| **crt.** | carton |
| **D** | turn |
| **DEF** | triangular window |
| **DF** | turning sash |
| **DFB** | turn only hinge |
| **DG** | turning sash, reverse-action |
| **DH** | turn restriction |
| **DK** | turn-tilt element |
| **DS** | turning secondary sash |
| **DS 8** | turning secondary sash (eurogroove) |
| **DS 16** | turning secondary sash (with reverse-action hardware groove) |
| **DSV** | concealed turning lock |
| **DZB** | turn hinge |
| **E** | anti-intruder |
| **EB** | corner hinge |
| **EL** | inserting jig |
| **ELB** | bottom hinge pin |
| **EL O** | bottom hinge top |
| **EL U** | bottom hinge bottom |
| **EL-S U** | bottom hinge |
| **ES** | increased security |
| **ESL** | stainless-steel finish |
| **FA** | sash distance |
| **FAV** | FAVORIT |
| **FB** | sash hinge |
| **FBS** | anti-mishandling device |
| **FEB** | rebate corner hinge |
| **FFA** | sash rebate stop |
| **FFB** | sash rebate width |
| **FFH** | sash rebate height |
| **FFK** | sash rebate edge |
| **FG** | sash lift |
| **FH** | sash lift |
| **FHD** | sash timber thickness |
| **FL** | airgap |
| **FPS** | tilt-only security stay |
| **FT** | rebate depth |
| **FZ** | fixing bolt |
| **G** | handle position |
| **GBA** | straight pin |
| **GG** | glass weight |
| **GK** | Constant handle height |
| **GL** | glazing bead |
| **GM** | centre/variable handle height |
| **GS** | basic security |
| **h** | milling depth |
| **H** | timber |
| **H4** | timber, 4 mm airgap |
| **H12** | timber, 12 mm airgap |
| **HD** | heavy duty hinge side |
| **K** | tilt |
| **KD** | tilt before turn (=TBT) |
| **KFB** | tilt sash hinge |
| **KL** | clamping jig |
| **KR** | shoot bolt |
| **KRB** | tilt-lock element |

| | |
|---|---|
| **KRL** | tilt-lock bearing |
| **KS** | constant secondary sash |
| **KSB** | tilt striker plate |
| **LH** | left |
| **LS** | length of angled section |
| **M** | magnetic cam |
| **MB** | with bolts |
| **MN** | with groove |
| **MSP** | multiple gap ventilation |
| **MV** | centre lock |
| **NA** | groove axis |
| **ON** | without groove |
| **OS** | without lock |
| **OZ** | without cam |
| **PDB** | profile data sheet |
| **PVC** | plastic |
| **PZ** | profile cylinder |
| **PZD** | pozidriv |
| **RAN** | fitting groove |
| **RB** | arched head |
| **RC** | resistant Class |
| **RH** | right |
| **RFA** | frame rebate stop |
| **RFB** | frame rebate width |
| **RFH** | frame rebate height |
| **RFK** | frame rebate edge |
| **RS** | rolling security cam |
| **RSA** | bolt throw |
| **S** | heavy version |
| **SB** | striker plate |
| **SB** | rounded head |
| **SB-RS** | striker plate f. rolling security cam |
| **SE** | flush-closing |
| **S-ES** | mushroom cam |
| **SF** | angled-head window |
| **SL** | top hinge |
| **SP** | gap ventilation |
| **S-RS** | comfort mushroom |
| **SW** | wrench size/opening |
| **t** | drilling depth |
| **TAF** | TITAN AF |
| **TBT** | Tilt-before-turn |
| **Telesk.** | Telescope |
| **TiP** | TITAN iP |
| **TL** | door design |
| **TS** | titanium silver |
| **U** | bottom |
| **ÜB** | rebate width |
| **UE** | monitoring |
| **UEB** | rebate |
| **US** | bottom side |
| **VKE** | sales unit |
| **VL** | extension |
| **VS** | locking side |
| **VSO** | locking side, top |
| **VSU** | locking side, bottom |
| **W** | stay hinge |
| **witho.** | without |
| **Z** | additional stay |
| **ZZ** | toothing/toothing |

The material number is a code for components and consists of eight segments. The material number allows products to be precisely assigned to their corresponding component drawing, surface, colour and other properties.

| T | KEU | 900 | 0 | – | 0 | 38 | 06 | 0 |
|---|---|---|---|---|---|---|---|---|

**Product group**
This code specifies to which product group of the SIEGENIA the product belongs

**Assembly**
The assembly is a reference to the component family (e.g. covers, gears, frame parts, etc.)

**Article counter**
Consecutive component number

**DIN or opening direction**
This code specifies the side of the hinge or opening direction)

**Surface**
Surface treatment of metal components (e.g. zinc-plated)

**Colour**
Colour of surface or material

**Sales unit**
Sales or packaging unit

**Index**
Production index

| T | KEU | 900 | 0 | – | 0 | 38 | 06 | 0 |
|---|---|---|---|---|---|---|---|---|
| 1 | 2 | 3 | 4 | | 5 | 6 | 7 | 8 |

| 1 Product group | | | | | |
|---|---|---|---|---|---|
| A | A300 | G | DRIVE (Building technology) | T | TITAN |
| B | BASICline | K | Small parts | U | SASS |
| C | Casement | L | AERO (Ventilation technology) | V | Packaging |
| D | KFV (Door) | M | ALU | Z | Accessories (general) |
| F | FAVORIT | P | PORTAL | | |

| 2 Assembly | | | | | |
|---|---|---|---|---|---|
| A | Jig | H | Handle | S | Stays |
| B | Hinge side parts | K | Cover caps | U | Monitoring (Aerocontrol/ radio sensor) |
| D | Seal, distance piece | L | Bogie wheels | V | Extension |
| E | Corner drives, lock bolts, locking parts | M | Mixed packages | Z | Linkages / accessories |
| F | Sash components | P | Profiles / profile sets PORTAL | | |
| G | Gear | R | Frame parts | | |
| The abbreviations ONLY apply to the 1st digit. Further digits are assigned individually. | | | | | |

| 3 Article counter |
|---|
| The articles are assigned consecutive numbers from 001 to 999. |

| 4 DIN or opening directions | | | | | |
|---|---|---|---|---|---|
| 0 | Independent of opening | 1 | DIN right | 2 | DIN left |

| 5 Surface | | | | | |
|---|---|---|---|---|---|
| 0 | Neutral (finished surface) e.g. plastic | 2 | E-Look (galvanised) | 6 | Clear - chromated (galvanised) |
| 1 | Titan silver (galvanised) | 5 | Aluminium (suitable for anodising, painting or coating) | L | Painted |

| 6 Colour | | | | | |
|---|---|---|---|---|---|
| 01 | RAL 9001 | 16 | RAL 8001 | H0 | Old gold (EV4) |
| 02 | RAL 9003 | 24 | EV1 Anodised | H4 | F9 Titan bright |
| 11 | RAL 8022 | 38 | Gold shining | I2 | F3 Gold matte |
| For further colours please inquire. | | | | | |

| 7 Packaging unit | | | | | |
|---|---|---|---|---|---|
| 01 | Quantity of 1 | 04 | Quantity of 25 | 07 | Quantity of 250 |
| 02 | Quantity of 10 | 05 | Quantity of 50 | 08 | Quantity of 500 |
| 03 | Quantity of 20 | 06 | Quantity of 100 | | |
| For further packaging units please inquire. | | | | | |

| 8 Processing index |
|---|
| The processing index indicates the processing status and is assigned consecutively. |

## Eurogroove 7/8x4

Airgap: min. 12 mm circumferential

Rebate width: 18/20 mm

Groove axis: 9 mm

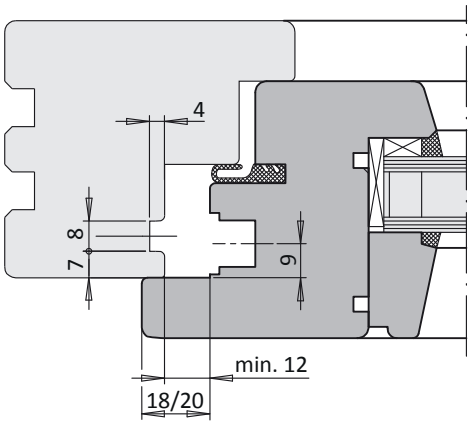


## Eurogroove 11/8x4

Airgap: min. 12mm circumferential

Rebate width: 18/20 mm

Groove axis: 13 mm

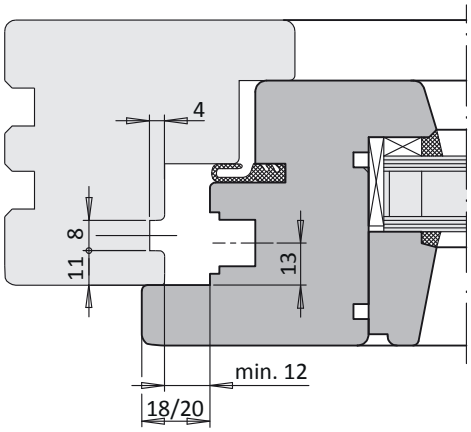


## Eurogroove 18/8 and 20/8

Airgap: min. 12 mm circumferential

Rebate width: 18/20 mm

Groove axis: 9 mm

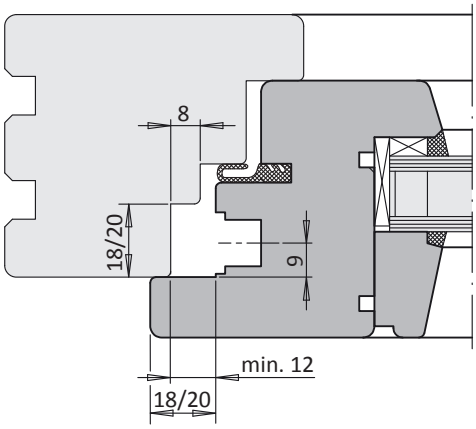

## Eurogroove ../8

Airgap: min. 12 mm circumferential

Rebate width: 18/20 mm

Groove axis: 13 mm

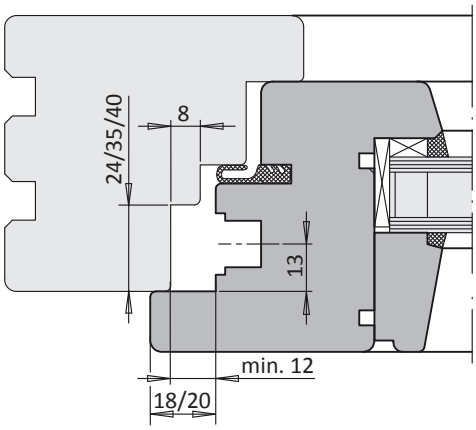


## Eurogroove 30/20

Airgap: min. 12 mm circumferential

Rebate width: 18/20 mm

Groove axis: 13 mm

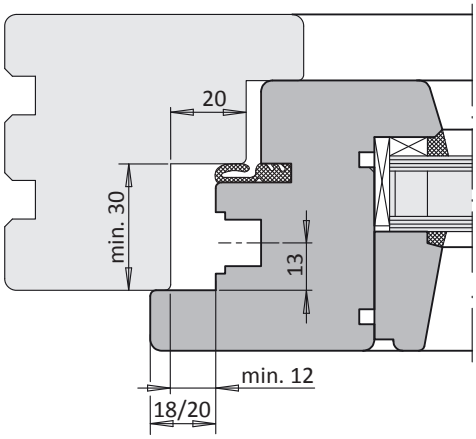

## Secondary sash with Eurogroove 7/8x4 (DS 8)

Airgap: min. 12 mm circumferential

Rebate width: 18/20 mm

Groove axis: 9 mm

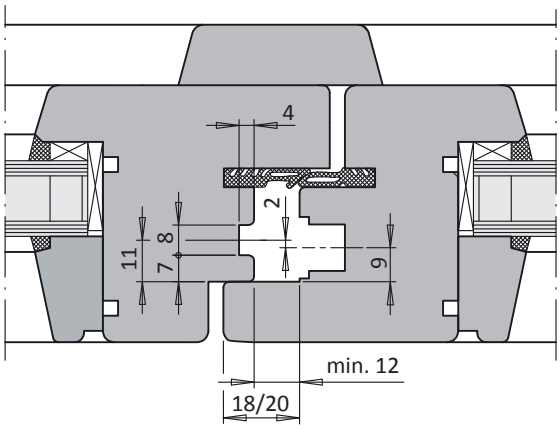


## Secondary sash with Eurogroove 11/8x4 (DS 8)

Airgap: min. 12mm circumferential

Rebate width: 18/20 mm

Groove axis: 13 mm

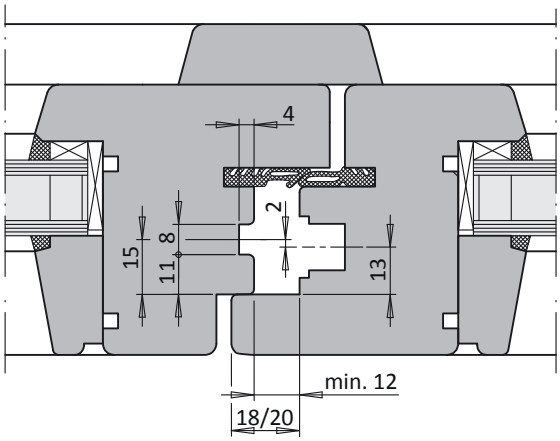

## Secondary sash with opposed fitting groove (DS 16)

Airgap: min. 12 mm circumferential

Rebate width: 18/20 mm

Groove axis: 9 mm

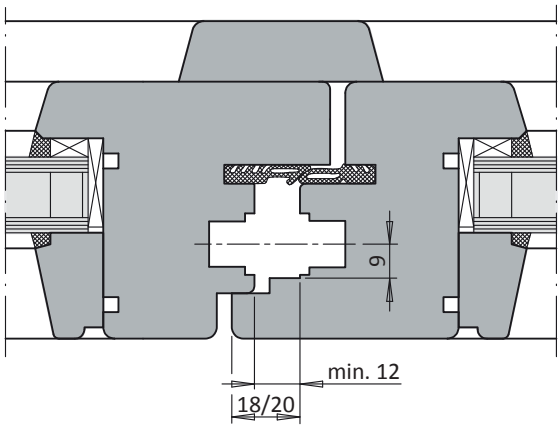


## Secondary sash with opposed fitting groove (DS 16)

Airgap: min. 12mm circumferential

Rebate width: 18/20 mm

Groove axis: 13 mm

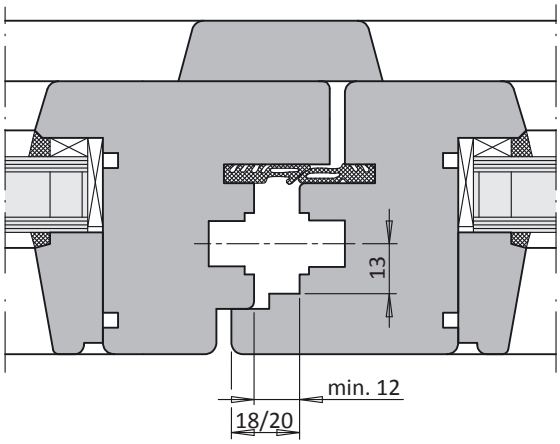


### Note:

For profile-related specifications please refer to the SIEGENIA profile datasheets.

### Attention:

The specifications of DIN 68 121 (timber profiles for windows and portal windows) apply to SIEGENIA fittings.

## Eurogroove 18/8 and 20/8

Airgap: min. 12 mm circumferential

Rebate width: 18/20 mm

Groove axis: 9 mm

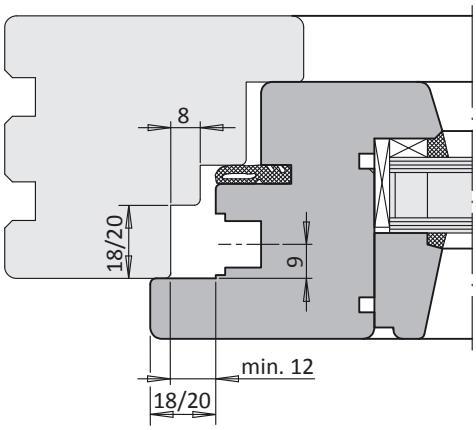


## Eurogroove 24/8

Airgap: min. 12mm circumferential

Rebate width: 18/20 mm

Groove axis: 13 mm

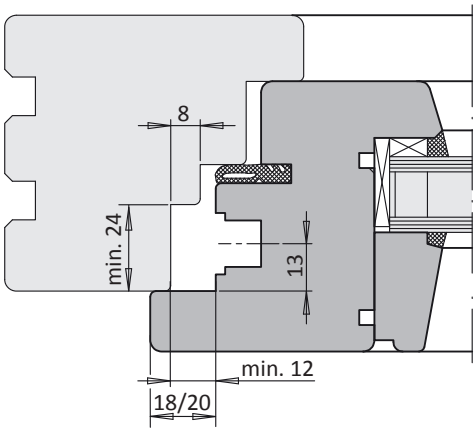


## Eurogroove 30/20

Airgap: min. 12 mm circumferential

Rebate width: 18/20 mm

Groove axis: 13 mm

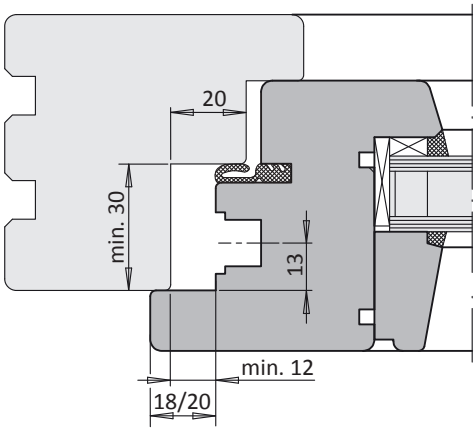

## Secondary sash with opposed fitting groove (DS 16)

Airgap: min. 12 mm circumferential

Rebate width: 18/20 mm

Groove axis: 9 mm

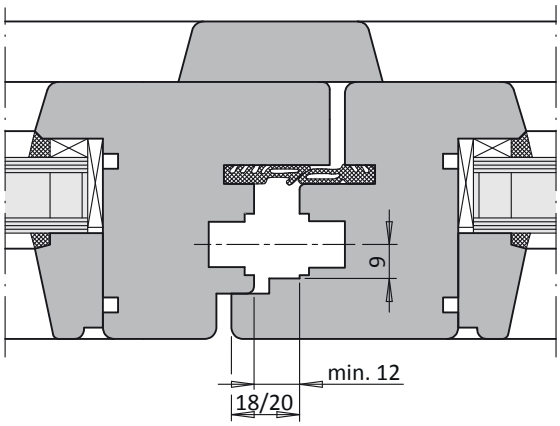


## Secondary sash with opposed fitting groove (DS 16)

Airgap: min. 12mm circumferential

Rebate width: 18/20 mm

Groove axis: 13 mm

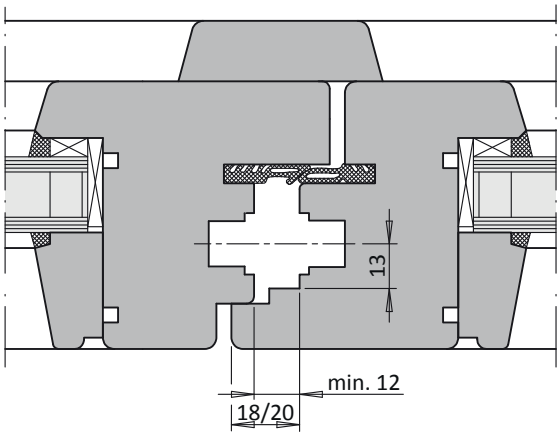


### Note:

For profile-related specifications please refer to the SIEGENIA profile datasheets.

### Attention:

The specifications of DIN 68 121 (timber profiles for windows and portal windows) apply to SIEGENIA fittings.

## 1-sash design

Airgap: min. 4 mm circumferential or min. 12 mm at top, transverse

Rebate width: 15 mm

Groove axis: 9 mm

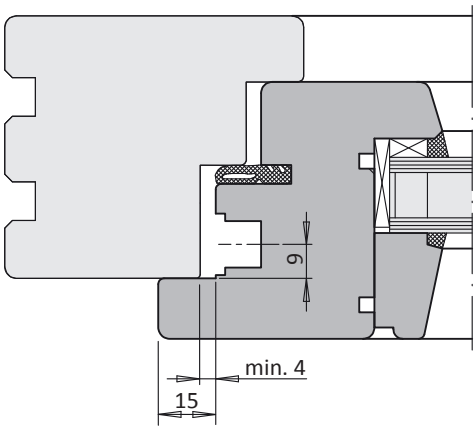


## Secondary sash with groove 7/8x4 (DS8)

Airgap: min. 12mm upright

Rebate width: 15 mm

Groove axis: 9 mm
groove offset 2 mm

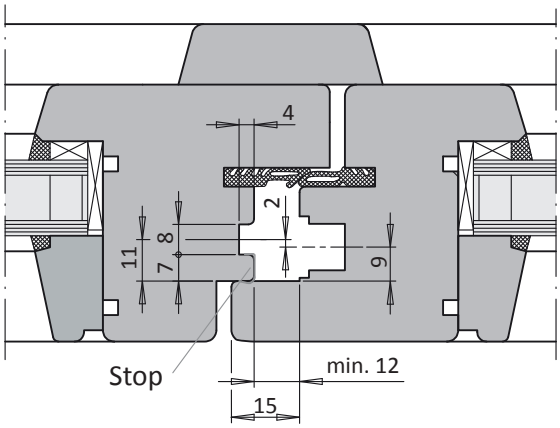


## Secondary sash with opposed fitting groove (DS 16)

Airgap: min. 12 mm upright

Rebate width: 15 mm

Groove axis: 9 mm

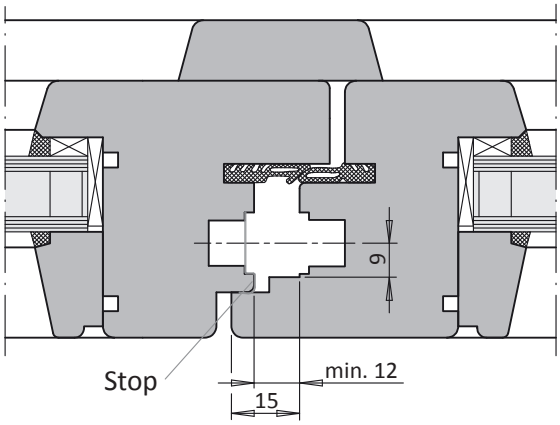

## 1-sash design

Airgap: min. 4 mm circumferential or min. 12 mm at top, transverse

Rebate width: 18 mm

Groove axis: 9 mm

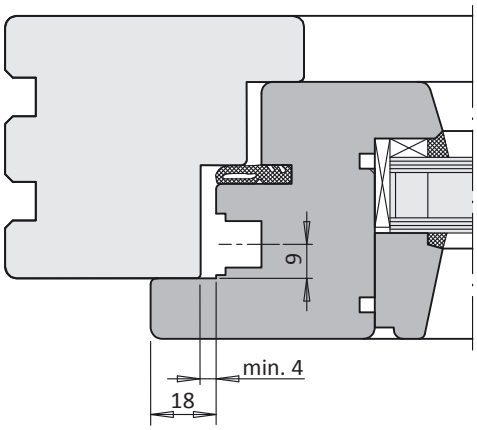


## Secondary sash with groove 7/8x4 (DS 8)

Airgap: min. 12mm upright

Rebate width: 18 mm

Groove axis: 9 mm
groove offset 2 mm

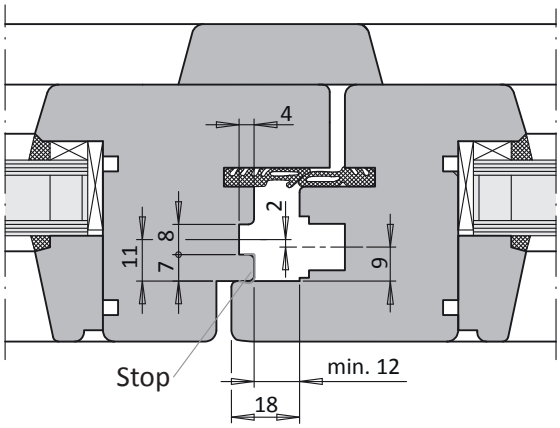


## Secondary sash with opposed fitting groove (DS 16)

Airgap: min. 12 mm upright

Rebate width: 18 mm

Groove axis: 9 mm

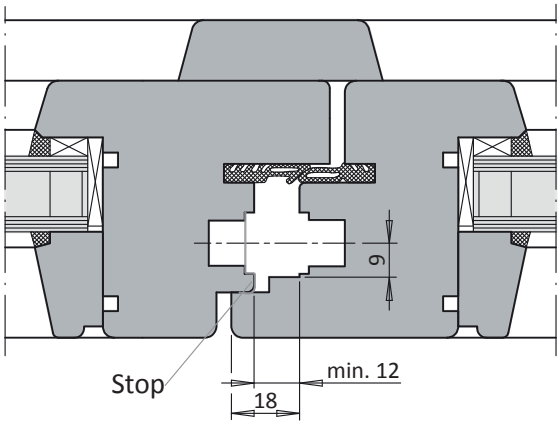

## 1-sash design

Airgap: min. 4 mm circumferential or min. 12 mm at top, transverse

Rebate width: 18 mm

Groove axis: 13 mm

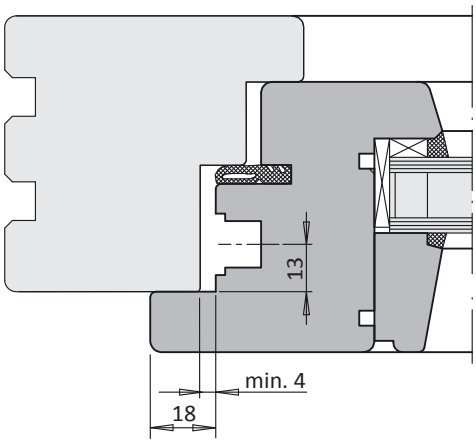


## Secondary sash with groove 7/8x4 (DS 8)

Airgap: min. 12mm upright

Rebate width: 18 mm

Groove axis: 13 mm
groove offset 2 mm

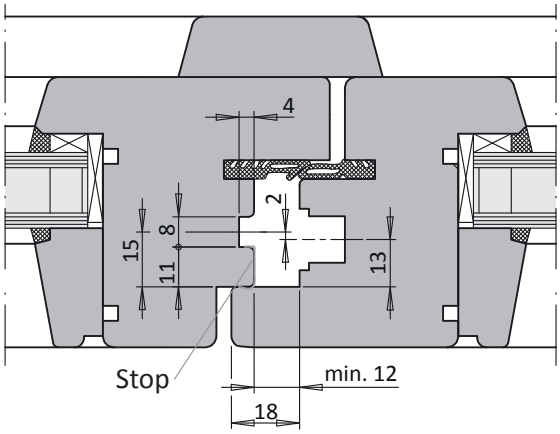


## Secondary sash with opposed fitting groove (DS 16)

Airgap: min. 12 mm upright

Rebate width: 18 mm

Groove axis: 13 mm

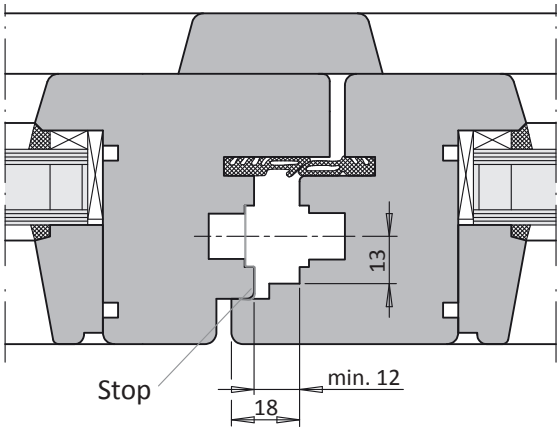


### Note

For profile-related specifications please refer to the SIEGENIA profile datasheets.

### Attention

The specifications of DIN 68 121 (timber profiles for windows and portal windows) apply to SIEGENIA fittings.

## 1-sash design

Cavity: min. 12 mm

Rebate width: 18 to 22 mm

Groove axis: 9/13 mm

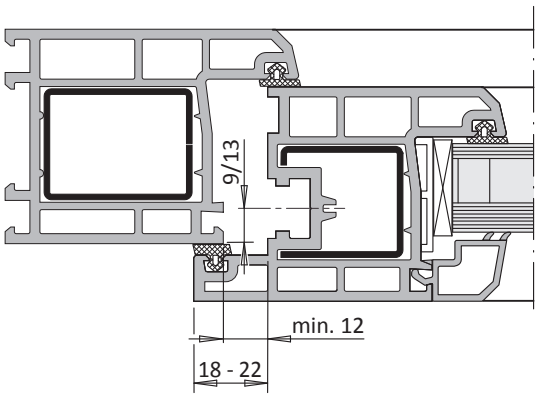


## Secondary sash with opposed fitting groove (DS 16)

Cavity: min. 12 mm

Rebate width: 18 to 22 mm

Groove axis: 9/13 mm

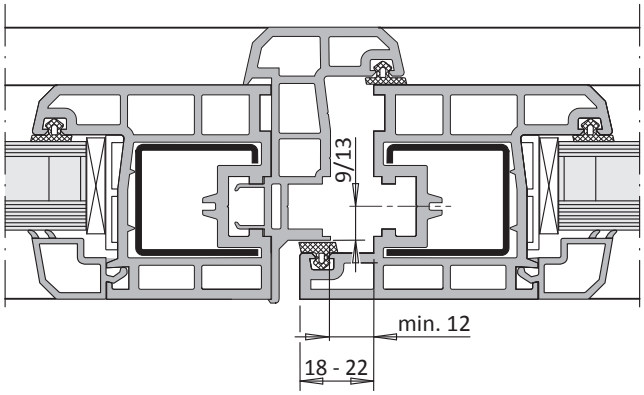


## Secondary sash with opposed fitting groove (DS 16)

Cavity: min. 12 mm

Rebate width: 18 to 22 mm

Groove axis: 9/13 mm

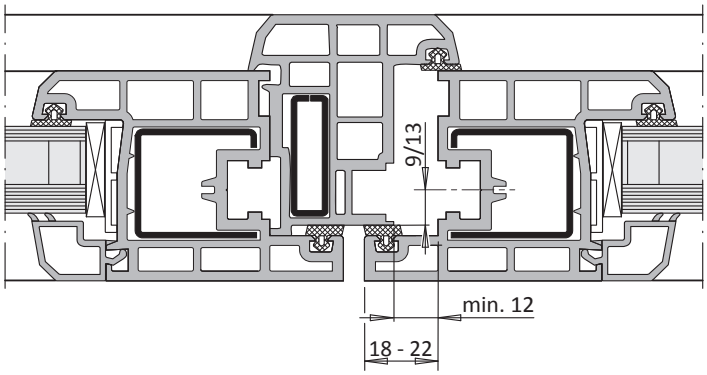


**Note:**

For profile-related specifications please refer to the SIEGENIA profile datasheets.

**Caution:**

The size ranges stated on the set sides apply to SIEGENIA fittings. In addition, the specifications of the profile fabricators or system owners also apply, especially in regard to possible restrictions on sash dimensions, sash weight and lock spacing.

## 1-sash design

Cavity: min. 12 mm

Rebate width: 17 to 21 mm

Groove axis: 9/13 mm

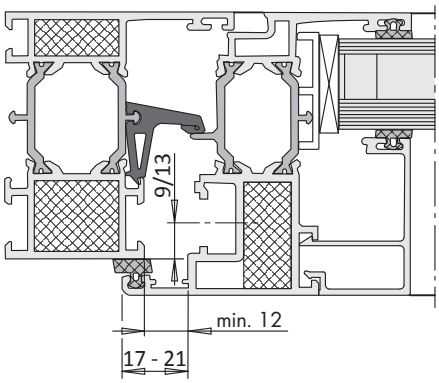


## Secondary sash with opposed fitting groove (DS 16)

Cavity: min. 12 mm

Rebate width: 17 to 21 mm

Groove axis: 9/13 mm

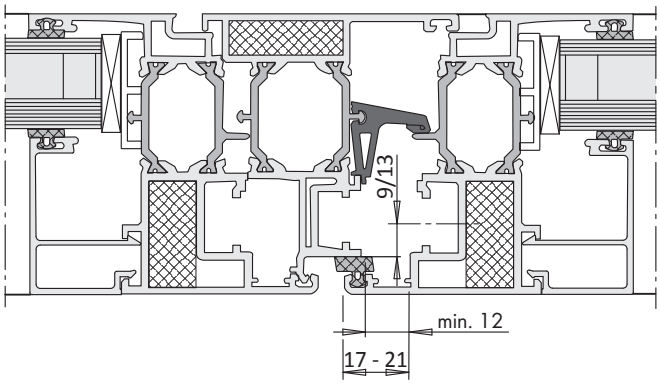


### Note:

For profile-related specifications please refer to the SIEGENIA profile datasheets.

### Caution:

The size ranges stated on the set sides apply to SIEGENIA fittings. In addition, the specifications of the profile fabricators or system owners also apply, especially in regard to possible restrictions on sash dimensions, sash weight and lock spacing.

| Description | Material | Page |
|---|---|---|
| window frame clearance PVC | | 1.1 - 3 |
| corner hinge PVC | TBEB6120, TBEB6130, TKEB0020 | 1.1 - 4 |
| corner hinge PVC Ø 6x12/12 | TBEB6180, TKEB0020 | 1.1 - 6 |
| corner hinge PVC ADV | TBEB6140, TBEB6150, TKEB0020 | 1.1 - 8 |
| rebate corner hinge PVC | TBFE1031, TBFE1032, TBFE1011, TBFE1012, TBFE1021, TBFE1022, TBFE1101, TBFE1102, FKFE0011, FKFE0012 | 1.1 - 10 |
| reb. corner hinge PVC/H A0175 | TBFE7051, TBFE7052, TBFE7071, TBFE7072, TBFE7081, TBFE7082, TBFE7231, TBFE7232, TKFE7011, TKFE7012 | 1.1 - 12 |
| reb.cor.hinge PVC/H A0175/0245 | TBFE7421, TBFE7422, TBFE7441, TBFE7442, TBFE7451, TBFE7452, TKFE7011, TKFE7012 | 1.1 - 14 |
| rebate corner hinge ALU16 | TBFE8031, TBFE8032, TBFE8041, TBFE8042, TBFE8051, TBFE8052, TBFE8061, TBFE8062, TKFE8031, TKFE8032, TBFE8071, TBFE8072 | 1.1 - 16 |
| bottom hinge PVC Ø 3x3/3 | TBEL6110, TKEO0010, TKEU0010 | 1.1 - 18 |
| bottom hinge PVC Ø 6x3/3 | TBEL6130, TKEO0010, TKEU0010 | 1.1 - 20 |
| bottom hinge PVC Ø 6x3/8 | TBEL6140, TKEO0010, TKEU0010 | 1.1 - 22 |
| bottom hinge PVC Ø 6x3/24 | TBEL6120, TKEO0010, TKEU0010 | 1.1 - 24 |
| stay hinge PVC | TBWB6000, TBWB6010, TBWB6020, TBWB6220, TBWB6040, TBWB6050, TBWB6250, TBWB6100, TBWB6200, TBWB6070, TBWB6270, TKWB0010 | 1.1 - 26 |
| stay hinge SF PVC | TBWS6000, TBWS6010, TBWS6020, TBWS6050, TBWS6070, TKWB0010 | 1.1 - 28 |
| top hinge DH PVC Ø 3x3 | TBSL6110, TBSB6020, TKSL0020 | 1.1 - 29 |
| top hinge DH PVC Ø 6x3 | TBSL6120, TBSB6020, TKSL0020 | 1.1 - 31 |
| top hinge DH PVC Ø 6x8 | TBSL6150, TBSB6020, TKSL0020 | 1.1 - 33 |
| top hinge DH PVC Ø 6x24 | TBSL6140, TBSB6020, TKSL0020 | 1.1 - 35 |
| bag FAVORIT-RB PVC | 700006, FKSL0030, FKWB0031, FKWB0032 | 1.1 - 37 |
| sash hinge PVC-12/.. | TBFB6020, TBFB6050, TKWB0010 | 1.1 - 39 |

| Description | Material | Page |
|---|---|---|
| tilt sash hinge PVC-12/.. | TBKF6000, TBKF6010, TBKF6020, TBKF6030, TBKF6050, TBKF6100, TBKF6070, TKWB0010 | 1.1 - 40 |
| turn only hinge RB PVC | TBDF1110, TBDF1130, TBDF1120, TKWB0010 | 1.1 - 42 |
| turn only hinge RB PVC | FBDF1010, FBDF1020, FBDF1040 | 1.1 - 43 |
| turn only hinge timber | TBDF6010, TRUP0050, TRUP7010, TKWB0010,TKDF0010 | 1.1 - 44 |
| pivot hinge PVC | 713563, 713556, FBFB0041, FBFB0042, FBFB0051, FBFB0052, FKDZ1000 | 1.1 - 47 |
| turn/tilt hinge SF PVC | ZBKF1000, ZMKF0020 | 1.1 - 50 |
| security plate | ZSFP0010, ZSFP0020 | 1.1 - 53 |
| cover caps TITAN PVC/ALU16 | TKEB0020, FKFE0011, FKFE0012, TKFE7011, TKFE7012, TKFE8031, TKFE8032, TKEO0010, TKEU0010, TKWB0010, TKSL0020, FKSL0030, FKWB0031, FKWB0032,TKEB0030 | 1.1 - 54 |

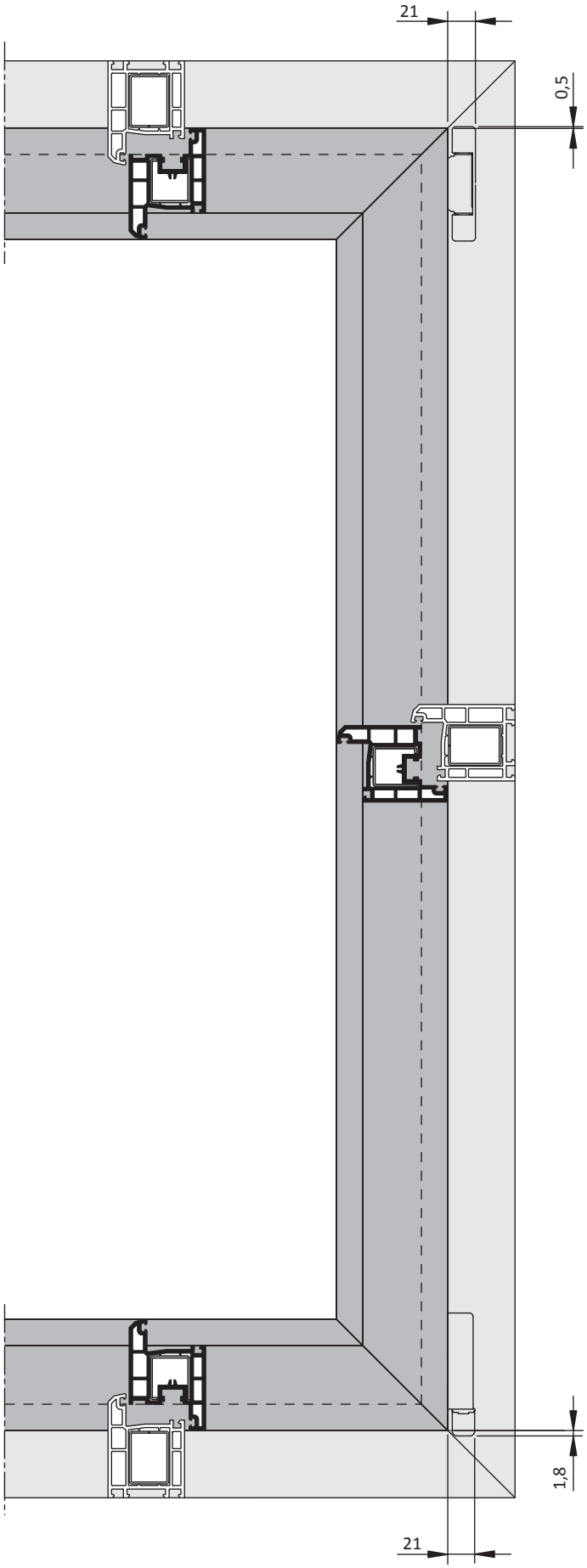
21
0,5
1,8
21

1.1

## Technical information

| Part number | Description | Dimensions (mm) A | sash weight | |
|---|---|---|---|---|
| TBEB6130-... | corner hinge PVC diam.6x16/20 | 20 | 100 kg | 2 |
| TBEB6120-... | corner hinge PVC diam.6x16/36 | 36 | 130 kg | 2 |
| TKEB0020-... | cover cap EB | - | - | - |

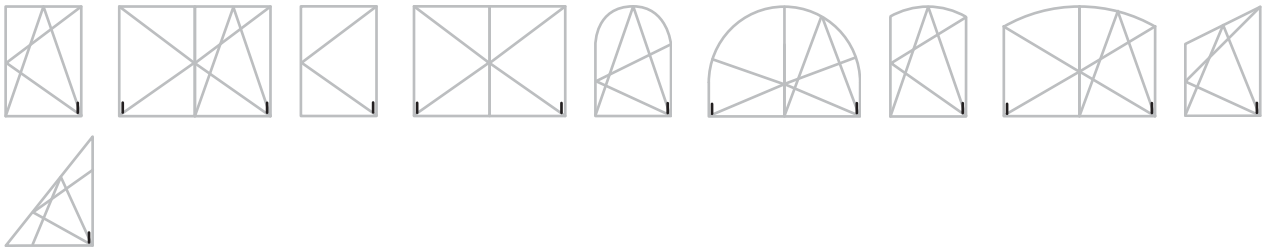

- Applicable on 18-22 mm rebate width
- Jig refer to PDB, line item TABLEB
- The specifications on the groove axis (NA) are theoretical values that may vary depending on profile tolerances and gasket versions.
- For alternative colours of cover caps, see ‘Cover Caps’ page

- **Please observe:**
  Guidelines/notes on the product and on liability (VHBH directive as well as the other applicable documents listed - directive can be downloaded at www.beschlagindustrie.de/ggsb/richtlinien.asp )
  Specifications from the profile manufacturers/system owners (PVC, light metal) or DIN 68 121 “Wooden profiles for windows and portal doors”

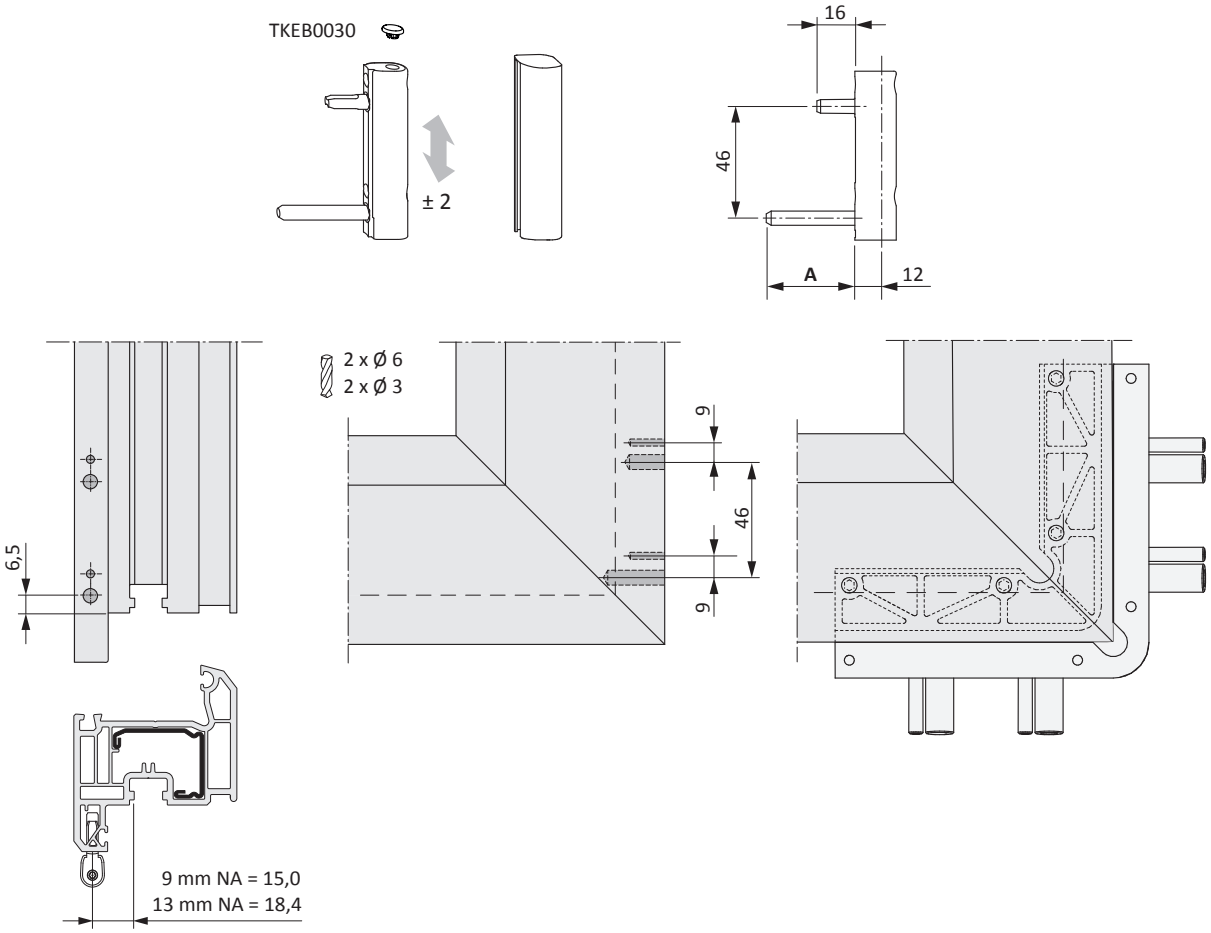

## Sales information

| Description | Part number | Surface | Colour | Box quantity |
|---|---|---|---|---|
| corner hinge PVC diam.6x16/20 | TBEB6130-10001_ | Titan Silver | without | 1 pc |
| | TBEB6130-10006_ | Titan Silver | without | 100 pcs |
| | TBEB6130-10101_ | Titan Silver | RAL9001 | 1 pc |
| | TBEB6130-10106_ | Titan Silver | RAL9001 | 100 pcs |
| | TBEB6130-10401_ | Titan Silver | RAL9016 | 1 pc |
| | TBEB6130-10406_ | Titan Silver | RAL9016 | 100 pcs |
| | TBEB6130-11201_ | Titan Silver | RAL8022 | 1 pc |
| | TBEB6130-11206_ | Titan Silver | RAL8022 | 100 pcs |
| corner hinge PVC diam.6x16/36 | TBEB6120-10001_ | Titan Silver | without | 1 pc |
| | TBEB6120-10006_ | Titan Silver | without | 100 pcs |
| | TBEB6120-10101_ | Titan Silver | RAL9001 | 1 pc |
| | TBEB6120-10106_ | Titan Silver | RAL9001 | 100 pcs |
| | TBEB6120-10401_ | Titan Silver | RAL9016 | 1 pc |
| | TBEB6120-10406_ | Titan Silver | RAL9016 | 100 pcs |
| | TBEB6120-11201_ | Titan Silver | RAL8022 | 1 pc |
| | TBEB6120-11206_ | Titan Silver | RAL8022 | 100 pcs |
| | TBEB6120-1H401_ | Titan Silver | F9 titan m dark | 1 pc |
| | TBEB6120-1H406_ | Titan Silver | F9 titan m dark | 100 pcs |
| cover cap EB | TKEB0020-00401_ | neutral | RAL9016 | 1 pc |
| | TKEB0020-00406_ | neutral | RAL9016 | 100 pcs |
| | TKEB0020-00408_ | neutral | RAL9016 | 500 pcs |

1.1

## Technical information

| Part number | Description | sash weight | |
|---|---|---|---|
| TBEB6180-... | corner hinge PVC diam.6x12/12 | 100 kg | 2 |
| TKEB0020-... | cover cap EB | - | - |

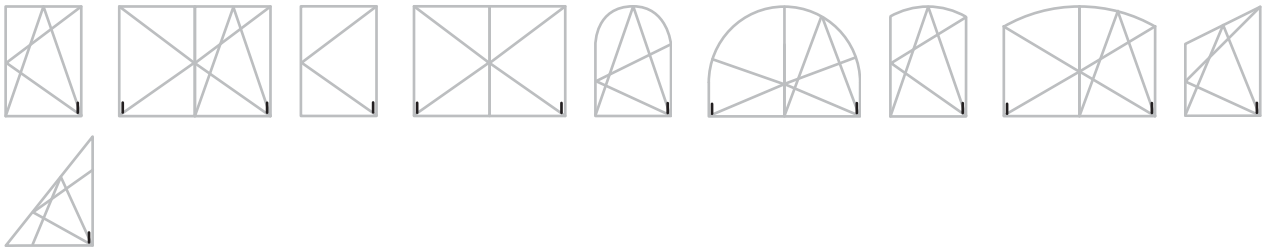

- Applicable on 18-22 mm rebate width
- Jig refer to PDB, line item TABLEB
- The specifications on the groove axis (NA) are theoretical values that may vary depending on profile tolerances and gasket versions.
- For alternative colours of cover caps, see ‘Cover Caps’ page

- **Please observe:**
  Guidelines/notes on the product and on liability (VHBH directive as well as the other applicable documents listed - directive can be downloaded at www.beschlagindustrie.de/ggsb/richtlinien.asp )
  Specifications from the profile manufacturers/system owners (PVC, light metal) or DIN 68 121 “Wooden profiles for windows and portal doors”

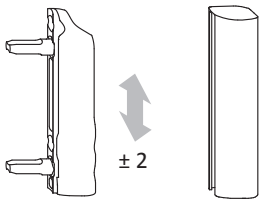


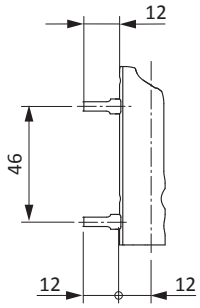


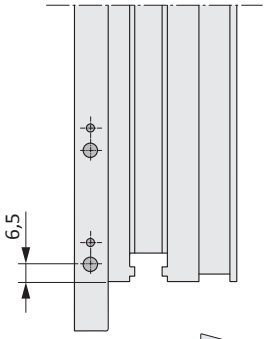


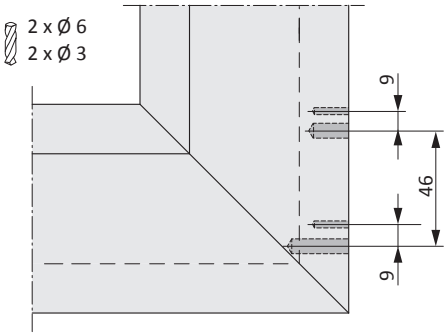


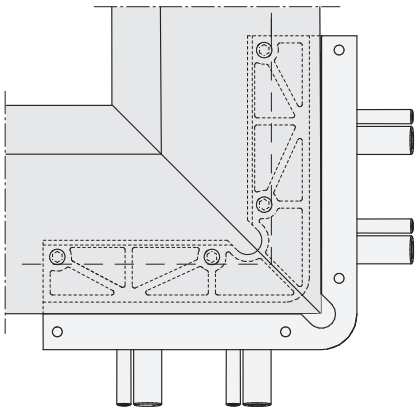

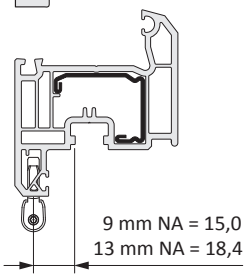

## Sales information

| Description | Part number | Surface | Colour | Box quantity |
|---|---|---|---|---|
| corner hinge PVC diam.6x12/12 | TBEB6180-10001_ | Titan Silver | without | 1 pc |
| | TBEB6180-10006_ | Titan Silver | without | 100 pcs |
| cover cap EB | TKEB0020-00401_ | neutral | RAL9016 | 1 pc |
| | TKEB0020-00406_ | neutral | RAL9016 | 100 pcs |
| | TKEB0020-00408_ | neutral | RAL9016 | 500 pcs |

1.1

## Technical information

| Part number | Description | Dimensions (mm) A | sash weight | |
|---|---|---|---|---|
| TBEB6150-... | corn.hingePVC diam.6x16/20 ADV | 20 | 100 kg | 2 |
| TBEB6140-... | corn.hingePVC diam.6x16/36 ADV | 36 | 130 kg | 2 |
| TKEB0020-... | cover cap EB | - | - | - |

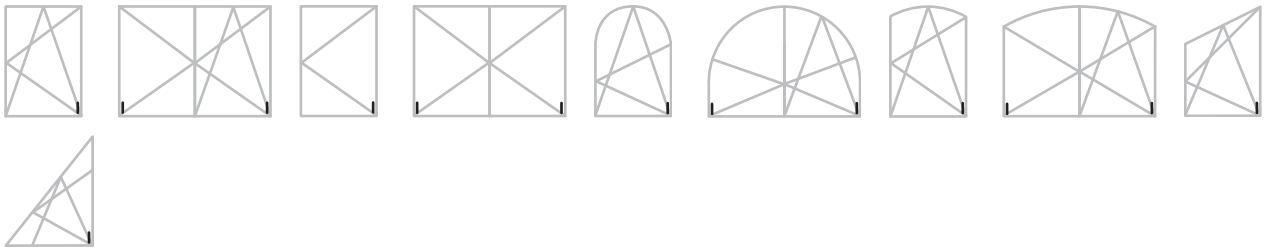

- Applicable on 18-22 mm rebate width
- Jig refer to PDB, line item TABLEB
- Pressure adjustable - adjustment range restricted when using cover caps
- The specifications on the groove axis (NA) are theoretical values that may vary depending on profile tolerances and gasket versions.
- For alternative colours of cover caps, see ‘Cover Caps’ page

- **Please observe:**
  Guidelines/notes on the product and on liability (VHBH directive as well as the other applicable documents listed - directive can be downloaded at www.beschlagindustrie.de/ggsb/richtlinien.asp )
  Specifications from the profile manufacturers/system owners (PVC, light metal) or DIN 68 121 “Wooden profiles for windows and portal doors”

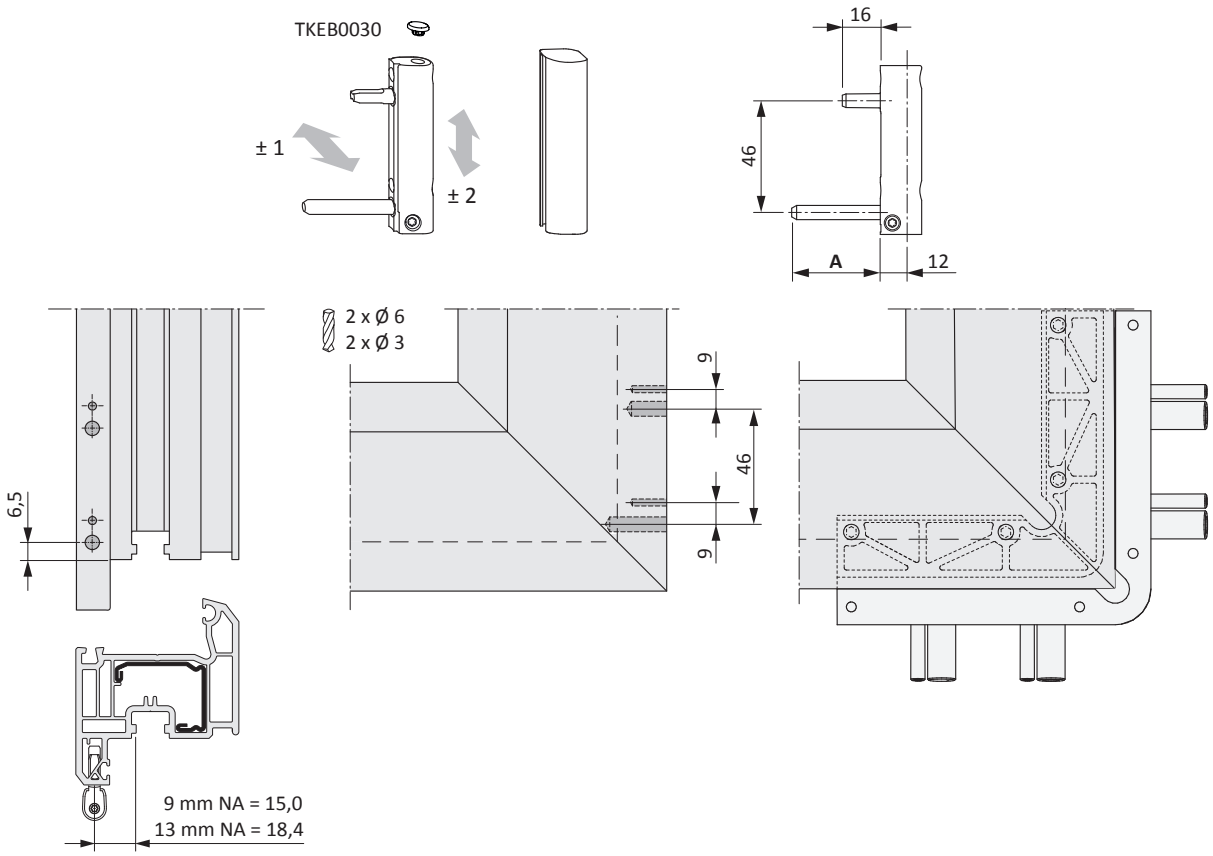

## Sales information

| Description | Part number | Surface | Colour | Box quantity |
|---|---|---|---|---|
| corn.hingePVC diam.6x16/20 ADV | TBEB6150-10001_ | Titan Silver | without | 1 pc |
| | TBEB6150-10006_ | Titan Silver | without | 100 pcs |
| | TBEB6150-10401_ | Titan Silver | RAL9016 | 1 pc |
| | TBEB6150-10406_ | Titan Silver | RAL9016 | 100 pcs |
| | TBEB6150-1H401_ | Titan Silver | F9 titan m dark | 1 pc |
| | TBEB6150-1H406_ | Titan Silver | F9 titan m dark | 100 pcs |
| corn.hingePVC diam.6x16/36 ADV | TBEB6140-10001_ | Titan Silver | without | 1 pc |
| | TBEB6140-10006_ | Titan Silver | without | 100 pcs |
| | TBEB6140-10401_ | Titan Silver | RAL9016 | 1 pc |
| | TBEB6140-10406_ | Titan Silver | RAL9016 | 100 pcs |
| | TBEB6140-1H401_ | Titan Silver | F9 titan m dark | 1 pc |
| | TBEB6140-1H406_ | Titan Silver | F9 titan m dark | 100 pcs |
| cover cap EB | TKEB0020-00401_ | neutral | RAL9016 | 1 pc |
| | TKEB0020-00406_ | neutral | RAL9016 | 100 pcs |
| | TKEB0020-00408_ | neutral | RAL9016 | 500 pcs |

1.1

## Technical information

| Part number | Description | Airgap | rebate width | Groove axis | sash weight | |
|---|---|---|---|---|---|---|
| TBFE1031-... | rebate corner hinge PVC 12/18-9 rh. | 12 | 18 | 9 | 130 kg | 4 |
| TBFE1032-... | rebate corner hinge PVC 12/18-9 lh. | 12 | 18 | 9 | 130 kg | 4 |
| TBFE1011-... | rebate corner hinge PVC 12/20-9 rh. | 12 | 20 | 9 | 130 kg | 4 |
| TBFE1012-... | rebate corner hinge PVC 12/20-9 lh. | 12 | 20 | 9 | 130 kg | 4 |
| TBFE1021-... | rebate corner hinge PVC 12/20-13 rh. | 12 | 20 | 13 | 130 kg | 4 |
| TBFE1022-... | rebate corner hinge PVC 12/20-13 lh. | 12 | 20 | 13 | 130 kg | 4 |
| TBFE1101-... | rebate corner hinge PVC 12/21-13 rh. | 12 | 21 | 13 | 130 kg | 4 |
| TBFE1102-... | rebate corner hinge PVC 12/21-13 lh. | 12 | 21 | 13 | 130 kg | 4 |
| FKFE0011-... | cover cap FEB rh. | - | - | - | - | - |
| FKFE0012-... | cover cap FEB lh. | - | - | - | - | - |

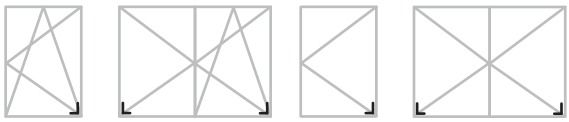

- For alternative colours of cover caps, see ‘Cover Caps’ page

- **Please observe:**
  Guidelines/notes on the product and on liability (VHBH directive as well as the other applicable documents listed - directive can be downloaded at www.beschlagindustrie.de/ggsb/richtlinien.asp )
  Specifications from the profile manufacturers/system owners (PVC, light metal) or DIN 68 121 “Wooden profiles for windows and portal doors”

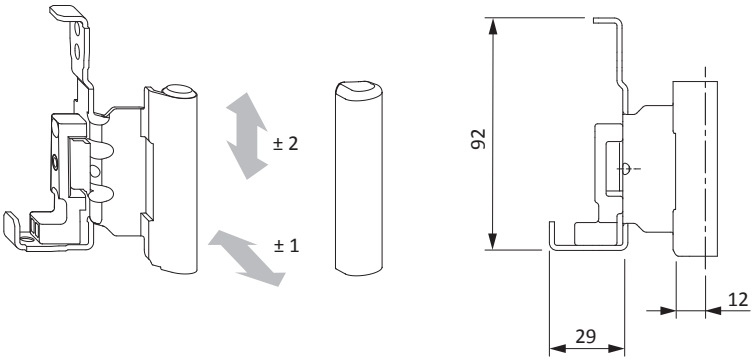

## Sales information

| Description | Part number | Surface | Colour | Box quantity |
|---|---|---|---|---|
| rebate corner hinge PVC 12/18-9 rh. | TBFE1031-10001_ | Titan Silver | without | 1 pc |
| | TBFE1031-10005_ | Titan Silver | without | 50 pcs |
| rebate corner hinge PVC 12/18-9 lh. | TBFE1032-10001_ | Titan Silver | without | 1 pc |
| | TBFE1032-10005_ | Titan Silver | without | 50 pcs |
| rebate corner hinge PVC 12/20-9 rh. | TBFE1011-10001_ | Titan Silver | without | 1 pc |
| | TBFE1011-10005_ | Titan Silver | without | 50 pcs |
| rebate corner hinge PVC 12/20-9 lh. | TBFE1012-10001_ | Titan Silver | without | 1 pc |
| | TBFE1012-10005_ | Titan Silver | without | 50 pcs |
| rebate corner hinge PVC 12/20-13 rh. | TBFE1021-10001_ | Titan Silver | without | 1 pc |
| | TBFE1021-10005_ | Titan Silver | without | 50 pcs |
| | TBFE1021-10101_ | Titan Silver | RAL9001 | 1 pc |
| | TBFE1021-10104_ | Titan Silver | RAL9001 | 25 pcs |
| | TBFE1021-10401_ | Titan Silver | RAL9016 | 1 pc |
| | TBFE1021-10404_ | Titan Silver | RAL9016 | 25 pcs |
| rebate corner hinge PVC 12/20-13 lh. | TBFE1022-10001_ | Titan Silver | without | 1 pc |
| | TBFE1022-10005_ | Titan Silver | without | 50 pcs |
| | TBFE1022-10101_ | Titan Silver | RAL9001 | 1 pc |
| | TBFE1022-10104_ | Titan Silver | RAL9001 | 25 pcs |
| | TBFE1022-10401_ | Titan Silver | RAL9016 | 1 pc |
| | TBFE1022-10404_ | Titan Silver | RAL9016 | 25 pcs |
| rebate corner hinge PVC 12/21-13 rh. | TBFE1101-10001_ | Titan Silver | without | 1 pc |
| | TBFE1101-10005_ | Titan Silver | without | 50 pcs |
| rebate corner hinge PVC 12/21-13 lh. | TBFE1102-10001_ | Titan Silver | without | 1 pc |
| | TBFE1102-10005_ | Titan Silver | without | 50 pcs |
| cover cap FEB rh. | FKFE0011-00401_ | neutral | RAL9016 | 1 pc |
| | FKFE0011-00408_ | neutral | RAL9016 | 500 pcs |
| cover cap FEB lh. | FKFE0012-00401_ | neutral | RAL9016 | 1 pc |
| | FKFE0012-00408_ | neutral | RAL9016 | 500 pcs |

1.1

## Technical information

| Part number | Description | Airgap | rebate width | Groove axis | sash weight | |
|---|---|---|---|---|---|---|
| TBFE7051-... | reb. corn. hinge KF/H 18-9 A0175 rh. | 12/4 | 18 | 9 | 130 kg | 7 |
| TBFE7052-... | reb. corn. hinge KF/H 18-9 A0175 lh. | 12/4 | 18 | 9 | 130 kg | 7 |
| TBFE7071-... | reb. corn. hinge KF/H 18-13 A0175 rh. | 12/4 | 18 | 13 | 130 kg | 7 |
| TBFE7072-... | reb. corn. hinge KF/H 18-13 A0175 lh. | 12/4 | 18 | 13 | 130 kg | 7 |
| TBFE7081-... | reb. corn. hinge KF/H 20-13 A0175 rh. | 12/4 | 20 | 13 | 130 kg | 7 |
| TBFE7082-... | reb. corn. hinge KF/H 20-13 A0175 lh. | 12/4 | 20 | 13 | 130 kg | 7 |
| TBFE7231-... | reb. corn. hinge KF/H 21-13 A0175 rh. | 12/4 | 21 | 13 | 130 kg | 7 |
| TBFE7232-... | reb. corn. hinge KF/H 21-13 A0175 lh. | 12/4 | 21 | 13 | 130 kg | 7 |
| TKFE7011-... | cover cap FEB rh. | - | - | - | - | - |
| TKFE7012-... | cover cap FEB lh. | - | - | - | - | - |

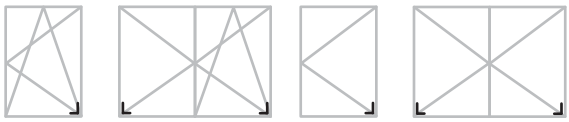

- Hinge clearance in the over rebate
- When assembling the rebate corner hinges TITAN, the rebate height must be min. 15 mm
- For alternative colours of cover caps, see ‘Cover Caps’ page

- **Please observe:**
  Guidelines/notes on the product and on liability (VHBH directive as well as the other applicable documents listed - directive can be downloaded at www.beschlagindustrie.de/ggsb/richtlinien.asp )
  Specifications from the profile manufacturers/system owners (PVC, light metal) or DIN 68 121 “Wooden profiles for windows and portal doors”

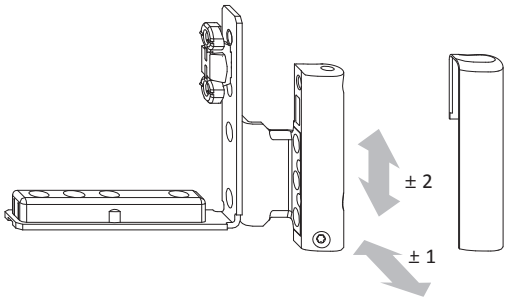


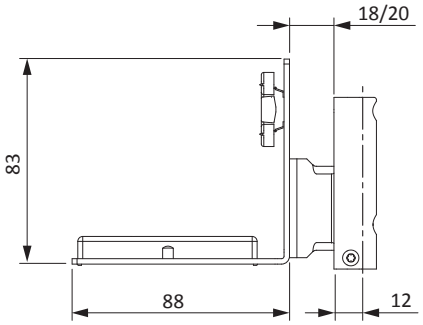

## Sales information

| Description | Part number | Surface | Colour | Box quantity |
|---|---|---|---|---|
| reb. corn. hinge KF/H 18-9 A0175 rh. | TBFE7051-10001_ | Titan Silver | without | 1 pc |
| | TBFE7051-10005_ | Titan Silver | without | 50 pcs |
| reb. corn. hinge KF/H 18-9 A0175 lh. | TBFE7052-10001_ | Titan Silver | without | 1 pc |
| | TBFE7052-10005_ | Titan Silver | without | 50 pcs |
| reb. corn. hinge KF/H 18-13 A0175 rh. | TBFE7071-10001_ | Titan Silver | without | 1 pc |
| | TBFE7071-10005_ | Titan Silver | without | 50 pcs |
| reb. corn. hinge KF/H 18-13 A0175 lh. | TBFE7072-10001_ | Titan Silver | without | 1 pc |
| | TBFE7072-10005_ | Titan Silver | without | 50 pcs |
| reb. corn. hinge KF/H 20-13 A0175 rh. | TBFE7081-10001_ | Titan Silver | without | 1 pc |
| | TBFE7081-10005_ | Titan Silver | without | 50 pcs |
| | TBFE7081-10405_ | Titan Silver | RAL9016 | 50 pcs |
| | TBFE7081-10401_ | Titan Silver | RAL9016 | 50 pcs |
| reb. corn. hinge KF/H 20-13 A0175 lh. | TBFE7082-10001_ | Titan Silver | without | 1 pc |
| | TBFE7082-10005_ | Titan Silver | without | 50 pcs |
| | TBFE7082-10405_ | Titan Silver | RAL9016 | 50 pcs |
| | TBFE7082-10401_ | Titan Silver | RAL9016 | 50 pcs |
| reb. corn. hinge KF/H 21-13 A0175 rh. | TBFE7231-10001_ | Titan Silver | without | 1 pc |
| | TBFE7231-10005_ | Titan Silver | without | 50 pcs |
| | TBFE7231-10405_ | Titan Silver | RAL9016 | 50 pcs |
| | TBFE7231-10401_ | Titan Silver | RAL9016 | 50 pcs |
| reb. corn. hinge KF/H 21-13 A0175 lh. | TBFE7232-10001_ | Titan Silver | without | 1 pc |
| | TBFE7232-10005_ | Titan Silver | without | 50 pcs |
| | TBFE7232-10405_ | Titan Silver | RAL9016 | 50 pcs |
| | TBFE7232-10401_ | Titan Silver | RAL9016 | 50 pcs |
| cover cap FEB rh. | TKFE7011-00401_ | neutral | RAL9016 | 1 pc |
| | TKFE7011-00406_ | neutral | RAL9016 | 100 pcs |
| | TKFE7011-00408_ | neutral | RAL9016 | 500 pcs |
| cover cap FEB lh. | TKFE7012-00401_ | neutral | RAL9016 | 1 pc |
| | TKFE7012-00406_ | neutral | RAL9016 | 100 pcs |
| | TKFE7012-00408_ | neutral | RAL9016 | 500 pcs |

1.1

## Technical information

| Part number | Description | Airgap | rebate width | Groove axis | sash weight | |
|---|---|---|---|---|---|---|
| TBFE7421-... | reb. corn. hinge KF/H 18-9 A0175 A0245 rh. | 12/4 | 18 | 9 | 130 kg | 7 |
| TBFE7422-... | reb. corn. hinge KF/H 18-9 A0175 A0245 lh. | 12/4 | 18 | 9 | 130 kg | 7 |
| TBFE7441-... | reb. corn. hinge KF/H 18-13 A0175 A0245 rh. | 12/4 | 18 | 13 | 130 kg | 7 |
| TBFE7442-... | reb. corn. hinge KF/H 18-13 A0175 A0245 lh. | 12/4 | 18 | 13 | 130 kg | 7 |
| TBFE7451-... | reb. corn. hinge KF/H 20-13 A0175 A0245 rh. | 12/4 | 20 | 13 | 130 kg | 7 |
| TBFE7452-... | reb. corn. hinge KF/H 20-13 A0175 A0245 lh. | 12/4 | 20 | 13 | 130 kg | 7 |
| TKFE7011-... | cover cap FEB rh. | - | - | - | - | - |
| TKFE7012-... | cover cap FEB lh. | - | - | - | - | - |

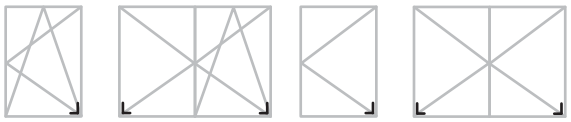

- Hinge clearance in the over rebate
- Suitable for use with threshold
- Hinge knuckle set 20 mm higher
- When assembling the rebate corner hinges TITAN, the rebate height must be min. 15 mm
- For alternative colours of cover caps, see ‘Cover Caps’ page

- **Please observe:**
  Guidelines/notes on the product and on liability (VHBH directive as well as the other applicable documents listed - directive can be downloaded at www.beschlagindustrie.de/ggsb/richtlinien.asp )
  Specifications from the profile manufacturers/system owners (PVC, light metal) or DIN 68 121 “Wooden profiles for windows and portal doors”

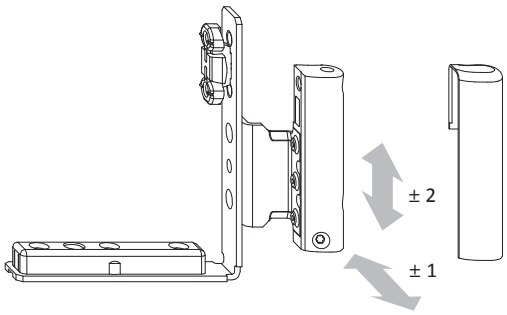


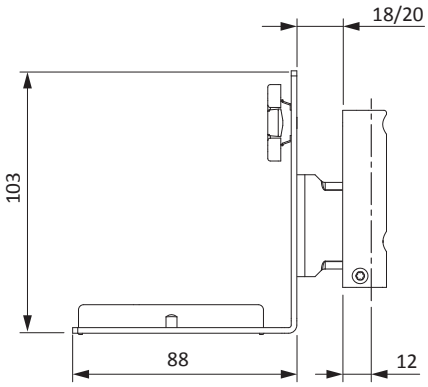

## Sales information

| Description | Part number | Surface | Colour | Box quantity |
|---|---|---|---|---|
| reb. corn. hinge KF/H 18-9 A0175 A0245 rh. | TBFE7421-10001_ | Titan Silver | without | 1 pc |
| | TBFE7421-10005_ | Titan Silver | without | 50 pcs |
| reb. corn. hinge KF/H 18-9 A0175 A0245 lh. | TBFE7422-10001_ | Titan Silver | without | 1 pc |
| | TBFE7422-10005_ | Titan Silver | without | 50 pcs |
| reb. corn. hinge KF/H 18-13 A0175 A0245 rh. | TBFE7441-10001_ | Titan Silver | without | 1 pc |
| | TBFE7441-10005_ | Titan Silver | without | 50 pcs |
| reb. corn. hinge KF/H 18-13 A0175 A0245 lh. | TBFE7442-10001_ | Titan Silver | without | 1 pc |
| | TBFE7442-10005_ | Titan Silver | without | 50 pcs |
| reb. corn. hinge KF/H 20-13 A0175 A0245 rh. | TBFE7451-10001_ | Titan Silver | without | 1 pc |
| | TBFE7451-10005_ | Titan Silver | without | 50 pcs |
| reb. corn. hinge KF/H 20-13 A0175 A0245 lh. | TBFE7452-10001_ | Titan Silver | without | 1 pc |
| | TBFE7452-10005_ | Titan Silver | without | 50 pcs |
| cover cap FEB rh. | TKFE7011-00401_ | neutral | RAL9016 | 1 pc |
| | TKFE7011-00406_ | neutral | RAL9016 | 100 pcs |
| | TKFE7011-00408_ | neutral | RAL9016 | 500 pcs |
| cover cap FEB lh. | TKFE7012-00401_ | neutral | RAL9016 | 1 pc |
| | TKFE7012-00406_ | neutral | RAL9016 | 100 pcs |
| | TKFE7012-00408_ | neutral | RAL9016 | 500 pcs |

1.1

## Technical information

| Part number | Description | Airgap | rebate width | Groove axis | sash weight | |
|---|---|---|---|---|---|---|
| TBFE8031-... | rebate corner hinge ALU16 12/18-9 rh. | 12 | 18 | 9 | 130 kg | 4 |
| TBFE8032-... | rebate corner hinge ALU16 12/18-9 lh. | 12 | 18 | 9 | 130 kg | 4 |
| TBFE8041-... | rebate corner hinge ALU16 12/18-13 rh. | 12 | 18 | 13 | 130 kg | 4 |
| TBFE8042-... | rebate corner hinge ALU16 12/18-13 lh. | 12 | 18 | 13 | 130 kg | 4 |
| TBFE8051-... | rebate corner hinge ALU16 12/20-9 rh. | 12 | 20 | 9 | 130 kg | 4 |
| TBFE8052-... | rebate corner hinge ALU16 12/20-9 lh. | 12 | 20 | 9 | 130 kg | 4 |
| TBFE8061-... | rebate corner hinge ALU16 12/20-13 rh. | 12 | 20 | 13 | 130 kg | 4 |
| TBFE8062-... | rebate corner hinge ALU16 12/20-13 lh. | 12 | 20 | 13 | 130 kg | 4 |
| TBFE8071-... | rebate corner hinge ALU16 12/18-10 rh. | 12 | 18 | 10 | 130 kg | 4 |
| TBFE8072-... | rebate corner hinge ALU16 12/18-10 lh. | 12 | 18 | 10 | 130 kg | 4 |
| TKFE8031-... | cover cap FEB ALU16 rh. | - | - | - | - | - |
| TKFE8032-... | cover cap FEB ALU16 lh. | - | - | - | - | - |

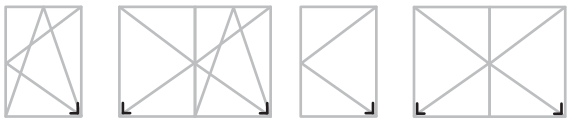

- For alternative colours of cover caps, see ‘Cover Caps’ page

- **Please observe:**
  Guidelines/notes on the product and on liability (VHBH directive as well as the other applicable documents listed - directive can be downloaded at www.beschlagindustrie.de/ggsb/richtlinien.asp )
  Specifications from the profile manufacturers/system owners (PVC, light metal) or DIN 68 121 “Wooden profiles for windows and portal doors”

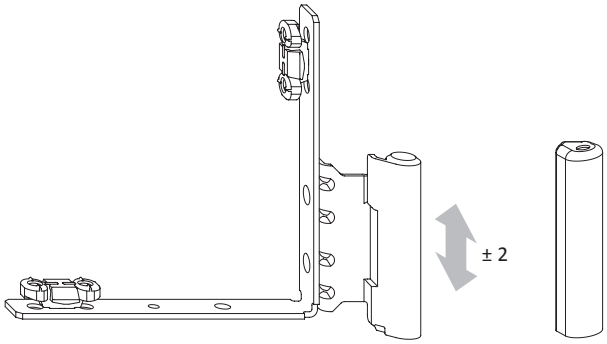


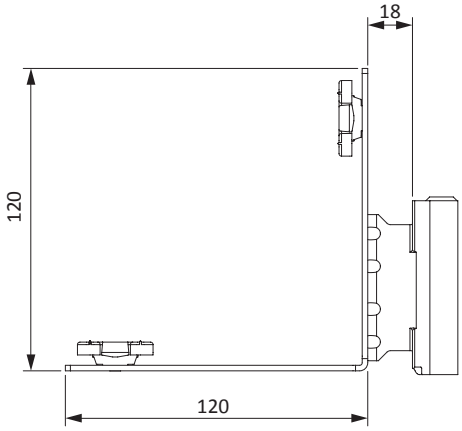

## Sales information

| Description | Part number | Surface | Colour | Box quantity |
|---|---|---|---|---|
| rebate corner hinge ALU16 12/18-9 rh. | TBFE8031-10001_ | Titan Silver | without | 1 pc |
| | TBFE8031-10005_ | Titan Silver | without | 50 pcs |
| rebate corner hinge ALU16 12/18-9 lh. | TBFE8032-10001_ | Titan Silver | without | 1 pc |
| | TBFE8032-10005_ | Titan Silver | without | 50 pcs |
| rebate corner hinge ALU16 12/18-13 rh. | TBFE8041-10001_ | Titan Silver | without | 1 pc |
| | TBFE8041-10005_ | Titan Silver | without | 50 pcs |
| rebate corner hinge ALU16 12/18-13 lh. | TBFE8042-10001_ | Titan Silver | without | 1 pc |
| | TBFE8042-10005_ | Titan Silver | without | 50 pcs |
| rebate corner hinge ALU16 12/20-9 rh. | TBFE8051-10001_ | Titan Silver | without | 1 pc |
| | TBFE8051-10005_ | Titan Silver | without | 50 pcs |
| rebate corner hinge ALU16 12/20-9 lh. | TBFE8052-10001_ | Titan Silver | without | 1 pc |
| | TBFE8052-10005_ | Titan Silver | without | 50 pcs |
| rebate corner hinge ALU16 12/20-13 rh. | TBFE8061-10001_ | Titan Silver | without | 1 pc |
| | TBFE8061-10005_ | Titan Silver | without | 50 pcs |
| rebate corner hinge ALU16 12/20-13 lh. | TBFE8062-10001_ | Titan Silver | without | 1 pc |
| | TBFE8062-10005_ | Titan Silver | without | 50 pcs |
| rebate corner hinge ALU16 12/18-10 rh. | TBFE8071-10001_ | Titan Silver | without | 1 pc |
| | TBFE8071-10005_ | Titan Silver | without | 50 pcs |
| rebate corner hinge ALU16 12/18-10 lh. | TBFE8072-10001_ | Titan Silver | without | 1 pc |
| | TBFE8072-10005_ | Titan Silver | without | 50 pcs |
| cover cap FEB ALU16 rh. | TKFE8031-00401_ | neutral | RAL9016 | 1 pc |
| | TKFE8031-00406_ | neutral | RAL9016 | 100 pcs |
| cover cap FEB ALU16 lh. | TKFE8032-00401_ | neutral | RAL9016 | 1 pc |
| | TKFE8032-00406_ | neutral | RAL9016 | 100 pcs |

1.1

## Technical information

| Part number | Description | sash weight | |
|---|---|---|---|
| TBEL6110-... | bottom hinge PVC diam. 3x3/3 | 100 kg | 4 |
| TKEO0010-... | cover cap EL O MB | - | - |
| TKEU0010-... | cover cap EL U | - | - |

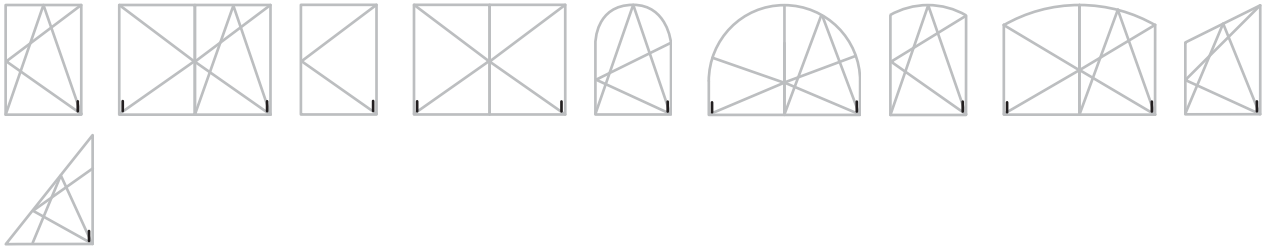

- For Dimension S refer to PDB
- Jig refer to PDB, line item TABLSE; FABBBB
- For alternative colours of cover caps, see ‘Cover Caps’ page

- **Please observe:**
  Guidelines/notes on the product and on liability (VHBH directive as well as the other applicable documents listed - directive can be downloaded at www.beschlagindustrie.de/ggsb/richtlinien.asp )
  Specifications from the profile manufacturers/system owners (PVC, light metal) or DIN 68 121 “Wooden profiles for windows and portal doors”

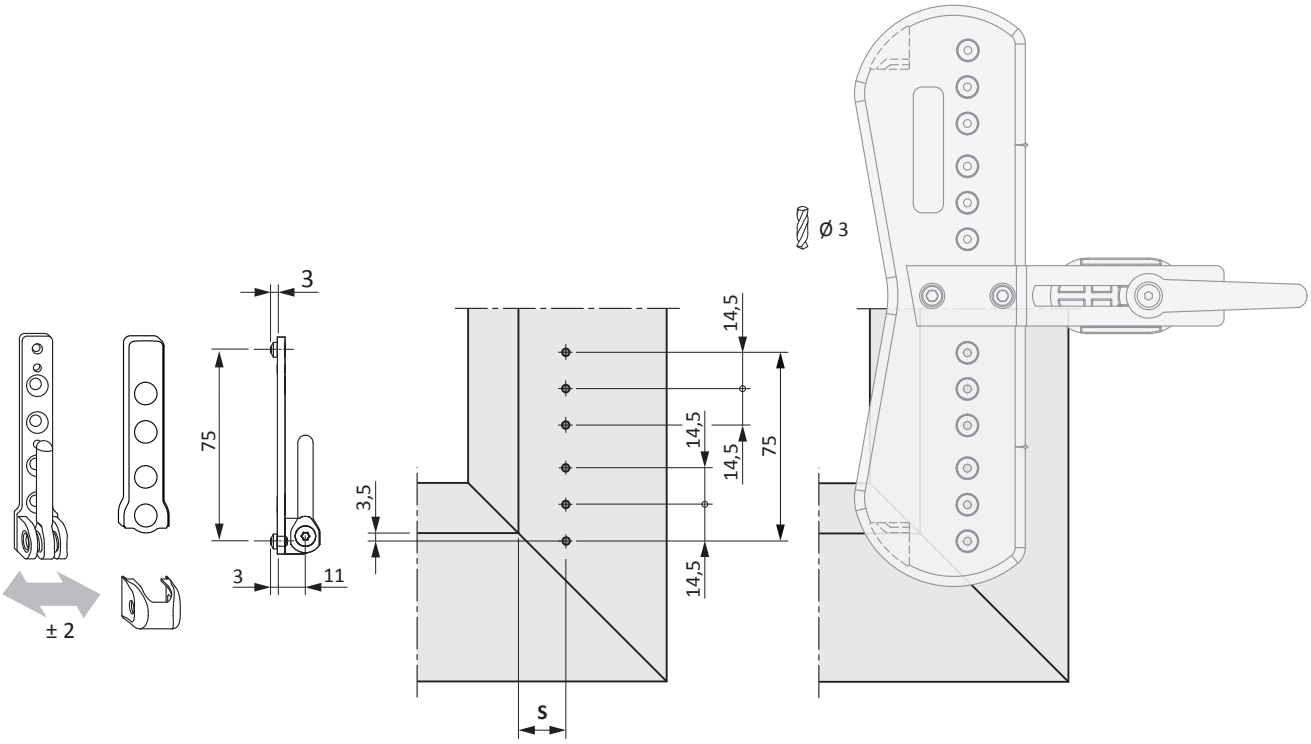

## Sales information

| Description | Part number | Surface | Colour | Box quantity |
|---|---|---|---|---|
| bottom hinge PVC diam. 3x3/3 | TBEL6110-10001_ | Titan Silver | without | 1 pc |
| | TBEL6110-10007_ | Titan Silver | without | 250 pcs |
| | TBEL6110-10101_ | Titan Silver | RAL9001 | 1 pc |
| | TBEL6110-10106_ | Titan Silver | RAL9001 | 100 pcs |
| | TBEL6110-10401_ | Titan Silver | RAL9016 | 1 pc |
| | TBEL6110-10406_ | Titan Silver | RAL9016 | 100 pcs |
| | TBEL6110-11201_ | Titan Silver | RAL8022 | 1 pc |
| | TBEL6110-11206_ | Titan Silver | RAL8022 | 100 pcs |
| | TBEL6110-1H401_ | Titan Silver | F9 titan m dark | 1 pc |
| | TBEL6110-1H406_ | Titan Silver | F9 titan m dark | 100 pcs |
| cover cap EL O MB | TKEO0010-00401_ | neutral | RAL9016 | 1 pc |
| | TKEO0010-00406_ | neutral | RAL9016 | 100 pcs |
| | TKEO0010-00408_ | neutral | RAL9016 | 500 pcs |
| cover cap EL U | TKEU0010-00401_ | neutral | RAL9016 | 1 pc |
| | TKEU0010-00406_ | neutral | RAL9016 | 100 pcs |
| | TKEU0010-00408_ | neutral | RAL9016 | 500 pcs |

1.1

## Technical information

| Part number | Description | sash weight | |
|---|---|---|---|
| TBEL6130-... | bottom hinge PVC diam.6x3/3 | 100 kg | 4 |
| TKEO0010-... | cover cap EL O MB | - | - |
| TKEU0010-... | cover cap EL U | - | - |

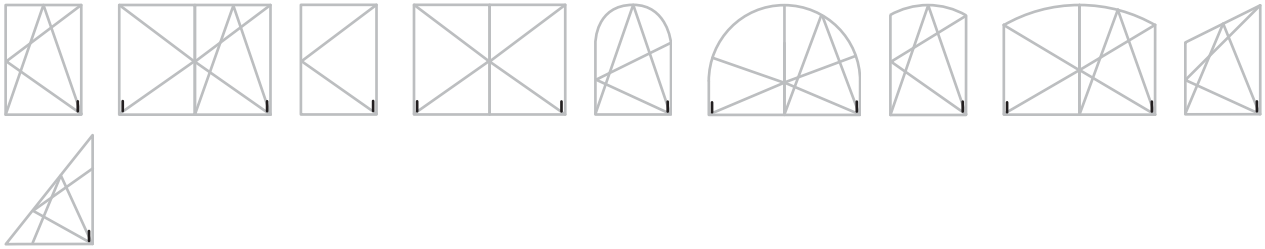

- For Dimension S refer to PDB
- Jig refer to PDB, line item TABLSE
- For alternative colours of cover caps, see ‘Cover Caps’ page

- **Please observe:**
  Guidelines/notes on the product and on liability (VHBH directive as well as the other applicable documents listed - directive can be downloaded at www.beschlagindustrie.de/ggsb/richtlinien.asp )
  Specifications from the profile manufacturers/system owners (PVC, light metal) or DIN 68 121 “Wooden profiles for windows and portal doors”

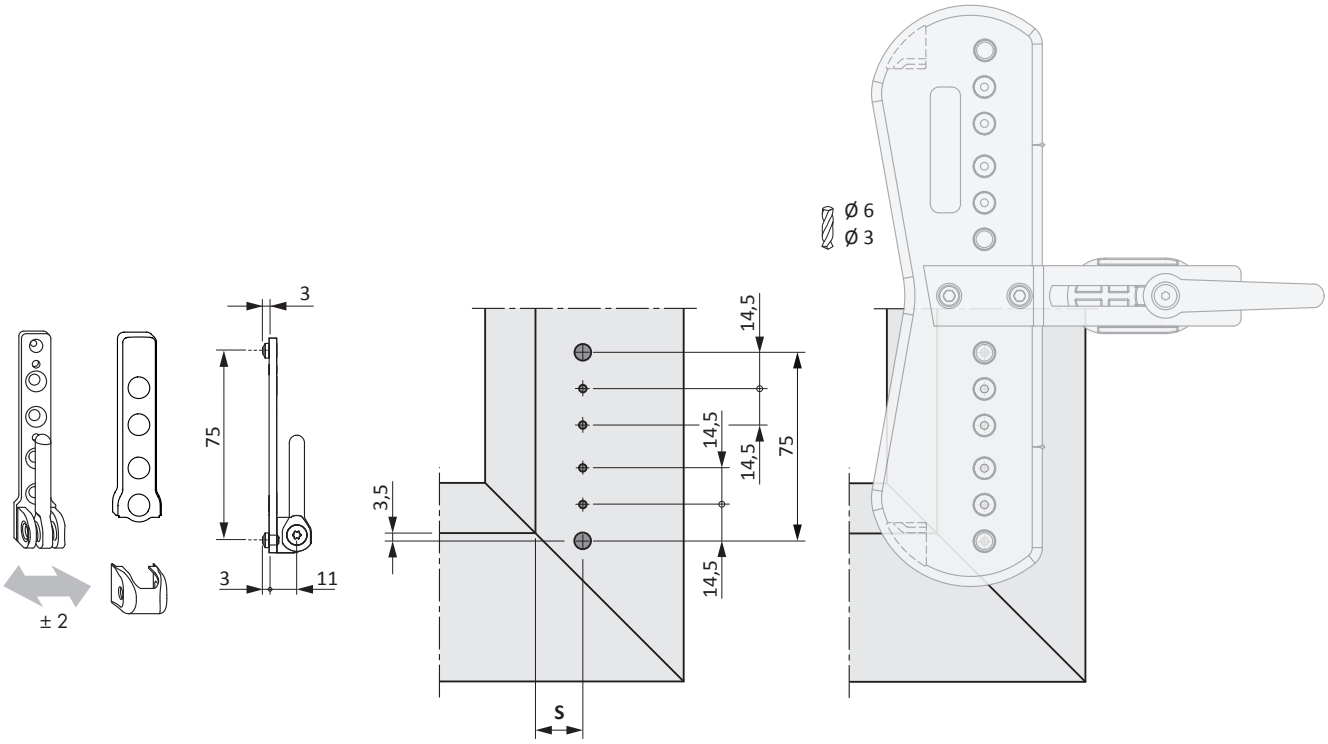

## Sales information

| Description | Part number | Surface | Colour | Box quantity |
|---|---|---|---|---|
| bottom hinge PVC diam.6x3/3 | TBEL6130-10001_ | Titan Silver | without | 1 pc |
| | TBEL6130-10007_ | Titan Silver | without | 250 pcs |
| | TBEL6130-10401_ | Titan Silver | RAL9016 | 1 pc |
| | TBEL6130-10406_ | Titan Silver | RAL9016 | 100 pcs |
| | TBEL6130-1H401_ | Titan Silver | F9 titan m dark | 1 pc |
| | TBEL6130-1H406_ | Titan Silver | F9 titan m dark | 100 pcs |
| cover cap EL O MB | TKEO0010-00401_ | neutral | RAL9016 | 1 pc |
| | TKEO0010-00406_ | neutral | RAL9016 | 100 pcs |
| | TKEO0010-00408_ | neutral | RAL9016 | 500 pcs |
| cover cap EL U | TKEU0010-00401_ | neutral | RAL9016 | 1 pc |
| | TKEU0010-00406_ | neutral | RAL9016 | 100 pcs |
| | TKEU0010-00408_ | neutral | RAL9016 | 500 pcs |

1.1

## Technical information

| Part number | Description | sash weight | |
|---|---|---|---|
| TBEL6140-... | bottom hinge PVC diam.6x3/8 | 100 kg | 4 |
| TKEO0010-... | cover cap EL O MB | - | - |
| TKEU0010-... | cover cap EL U | - | - |

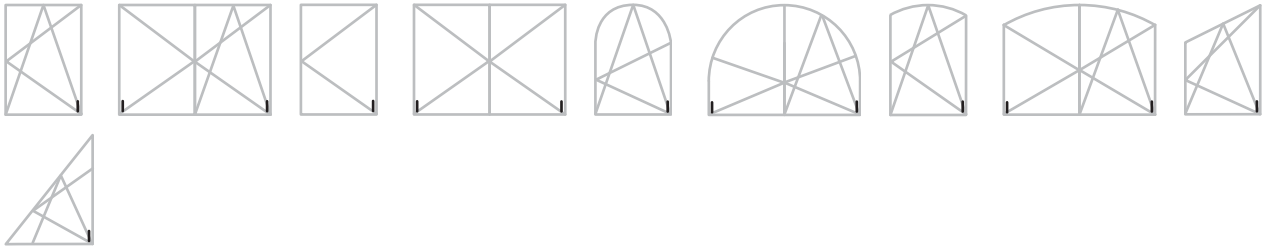

- For Dimension S refer to PDB
- Jig refer to PDB, line item TABLSE
- For alternative colours of cover caps, see ‘Cover Caps’ page

- **Please observe:**
  Guidelines/notes on the product and on liability (VHBH directive as well as the other applicable documents listed - directive can be downloaded at www.beschlagindustrie.de/ggsb/richtlinien.asp )
  Specifications from the profile manufacturers/system owners (PVC, light metal) or DIN 68 121 “Wooden profiles for windows and portal doors”

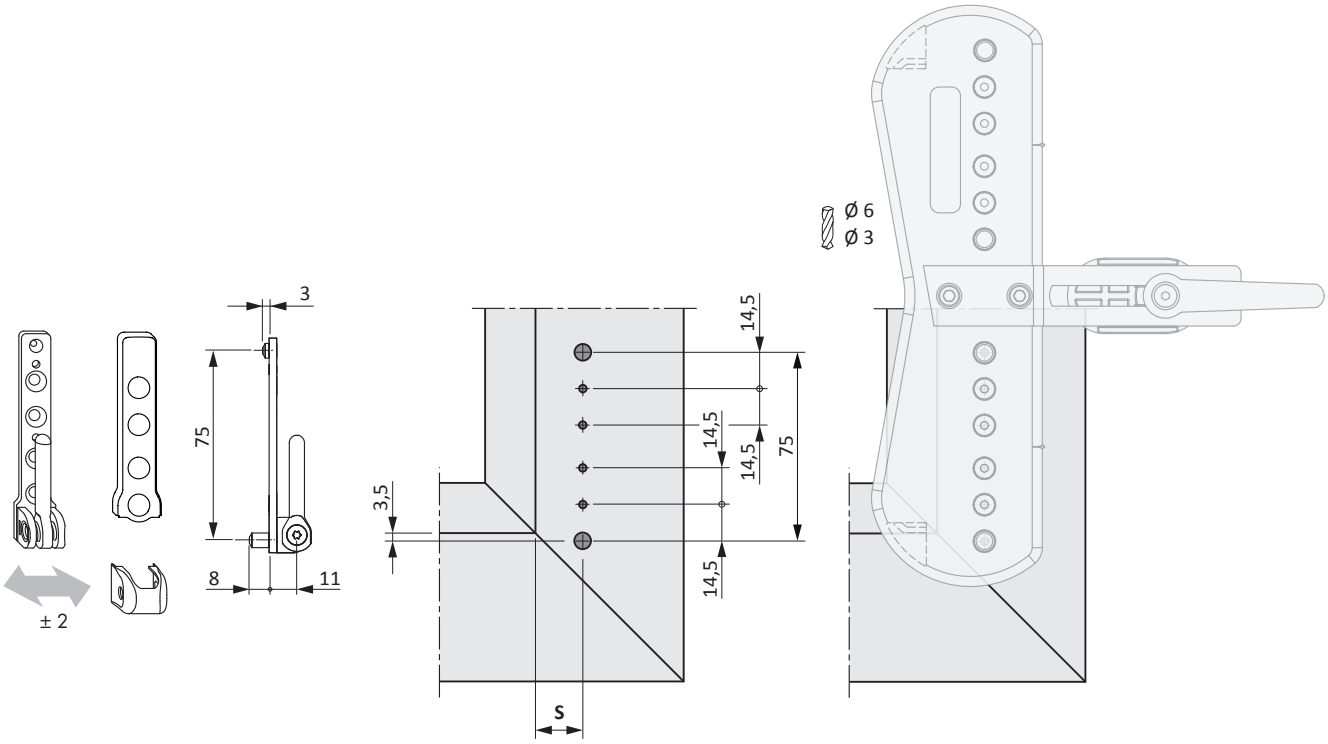

## Sales information

| Description | Part number | Surface | Colour | Box quantity |
|---|---|---|---|---|
| bottom hinge PVC diam.6x3/8 | TBEL6140-10001_ | Titan Silver | without | 1 pc |
| | TBEL6140-10007_ | Titan Silver | without | 250 pcs |
| | TBEL6140-10401_ | Titan Silver | RAL9016 | 1 pc |
| | TBEL6140-10406_ | Titan Silver | RAL9016 | 100 pcs |
| | TBEL6140-1H401_ | Titan Silver | F9 titan m dark | 1 pc |
| | TBEL6140-1H406_ | Titan Silver | F9 titan m dark | 100 pcs |
| cover cap EL O MB | TKEO0010-00401_ | neutral | RAL9016 | 1 pc |
| | TKEO0010-00406_ | neutral | RAL9016 | 100 pcs |
| | TKEO0010-00408_ | neutral | RAL9016 | 500 pcs |
| cover cap EL U | TKEU0010-00401_ | neutral | RAL9016 | 1 pc |
| | TKEU0010-00406_ | neutral | RAL9016 | 100 pcs |
| | TKEU0010-00408_ | neutral | RAL9016 | 500 pcs |

1.1

## Technical information

| Part number | Description | Dimensions (mm) A | sash weight | |
|---|---|---|---|---|
| TBEL6120-... | bottom hinge PVC diam.6x3/24 | 24 | 130 kg | 4 |
| TKEO0010-... | cover cap EL O MB | - | - | - |
| TKEU0010-... | cover cap EL U | - | - | - |

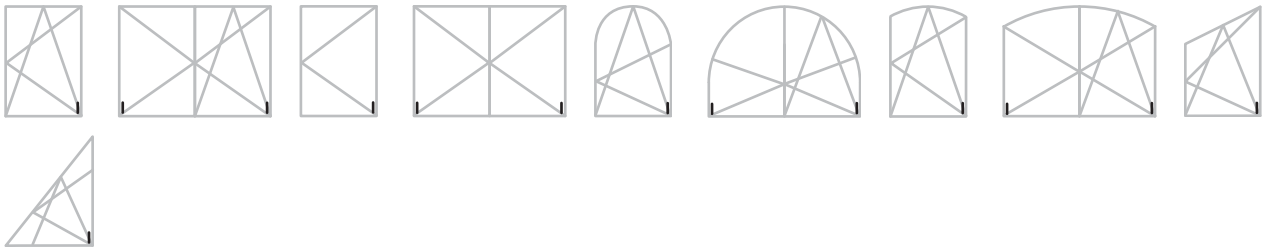

- For Dimension S refer to PDB
- Jig refer to PDB, line item TABLSE
- For alternative colours of cover caps, see ‘Cover Caps’ page

- **Please observe:**
  Guidelines/notes on the product and on liability (VHBH directive as well as the other applicable documents listed - directive can be downloaded at www.beschlagindustrie.de/ggsb/richtlinien.asp )
  Specifications from the profile manufacturers/system owners (PVC, light metal) or DIN 68 121 “Wooden profiles for windows and portal doors”

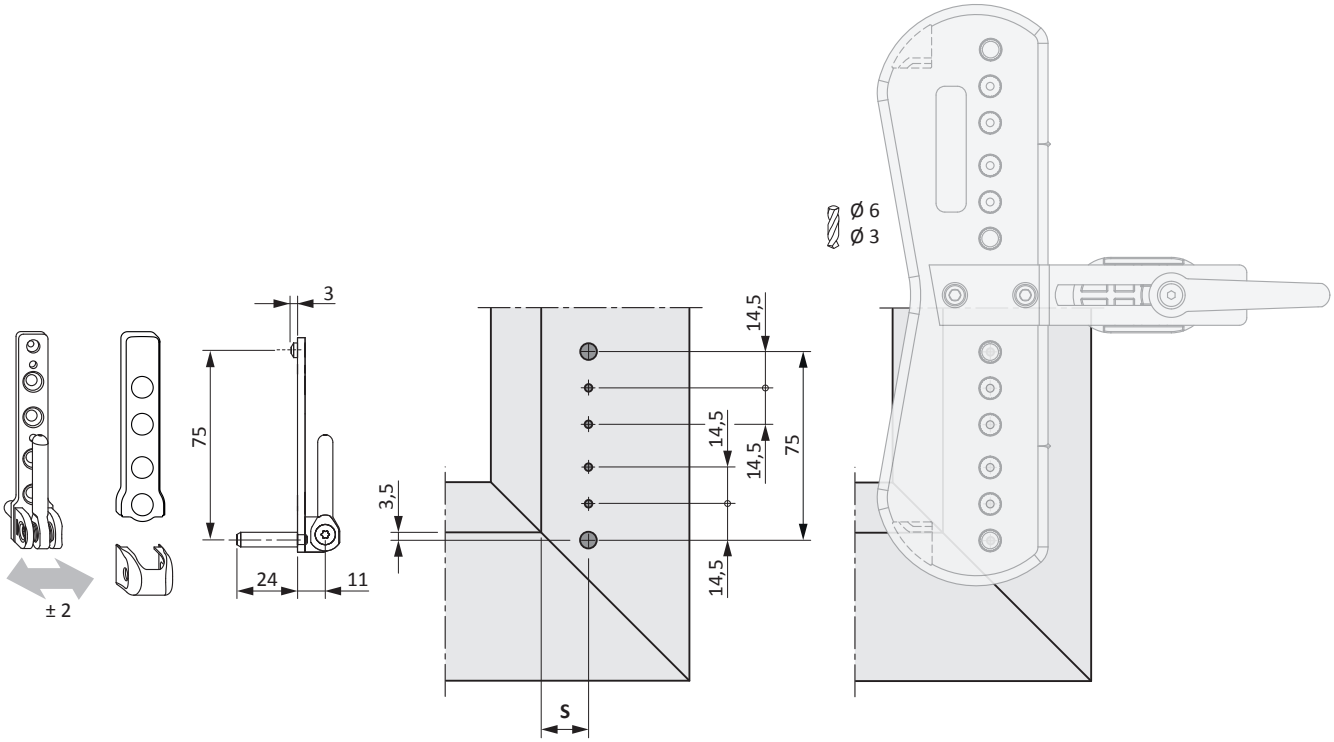

## Sales information

| Description | Part number | Surface | Colour | Box quantity |
|---|---|---|---|---|
| bottom hinge PVC diam.6x3/24 | TBEL6120-10001_ | Titan Silver | without | 1 pc |
| | TBEL6120-10007_ | Titan Silver | without | 250 pcs |
| | TBEL6120-10101_ | Titan Silver | RAL9001 | 1 pc |
| | TBEL6120-10106_ | Titan Silver | RAL9001 | 100 pcs |
| | TBEL6120-10401_ | Titan Silver | RAL9016 | 1 pc |
| | TBEL6120-10406_ | Titan Silver | RAL9016 | 100 pcs |
| | TBEL6120-11201_ | Titan Silver | RAL8022 | 1 pc |
| | TBEL6120-11206_ | Titan Silver | RAL8022 | 100 pcs |
| | TBEL6120-1H401_ | Titan Silver | F9 titan m dark | 1 pc |
| | TBEL6120-1H406_ | Titan Silver | F9 titan m dark | 100 pcs |
| cover cap EL O MB | TKEO0010-00401_ | neutral | RAL9016 | 1 pc |
| | TKEO0010-00406_ | neutral | RAL9016 | 100 pcs |
| | TKEO0010-00408_ | neutral | RAL9016 | 500 pcs |
| cover cap EL U | TKEU0010-00401_ | neutral | RAL9016 | 1 pc |
| | TKEU0010-00406_ | neutral | RAL9016 | 100 pcs |
| | TKEU0010-00408_ | neutral | RAL9016 | 500 pcs |

1.1

## Technical information

| Part number | Description | Airgap | rebate width | Groove axis | sash weight |
|---|---|---|---|---|---|
| TBWB6000-... | stay hinge DH PVC 12/18-9 | 12 | 18 | 9 | 130 kg |
| TBWB6010-... | stay hinge DH PVC 12/18-13 | 12 | 18 | 13 | 130 kg |
| TBWB6020-... | stay hinge DH PVC 12/20-9 | 12 | 20 | 9 | 130 kg |
| TBWB6220-... | stay hinge DH PVC 12/20-9 A7700 | 12 | 20 | 9 | 130 kg |
| TBWB6040-... | stay hinge DH PVC 12/20-12,3 | 12 | 20 | 12,30 | 130 kg |
| TBWB6050-... | stay hinge DH PVC 12/20-13 | 12 | 20 | 13 | 130 kg |
| TBWB6250-... | stay hinge DH PVC 12/20-13 A7700 | 12 | 20 | 13 | 130 kg |
| TBWB6100-... | stay hinge DH PVC 12/20-14 | 12 | 20 | 14 | 130 kg |
| TBWB6200-... | stay hinge DH PVC 12/20-14 A7700 | 12 | 20 | 14 | 130 kg |
| TBWB6070-... | stay hinge DH PVC 12/21-13 | 12 | 21 | 13 | 130 kg |
| TBWB6270-... | stay hinge DH PVC 12/21-13 A7700 | 12 | 21 | 13 | 130 kg |
| TKWB0010-... | cover cap W PVC | - | - | - | - |

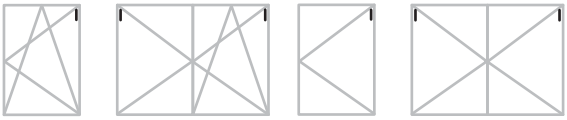

- A7700 = stay hinges with increased stopping force
- Notch out the sash overlap gasket in the vicinity of the hinge clearance!
- For alternative colours of cover caps, see ‘Cover Caps’ page

- **Please observe:**
  Guidelines/notes on the product and on liability (VHBH directive as well as the other applicable documents listed - directive can be downloaded at www.beschlagindustrie.de/ggsb/richtlinien.asp )
  Specifications from the profile manufacturers/system owners (PVC, light metal) or DIN 68 121 “Wooden profiles for windows and portal doors”

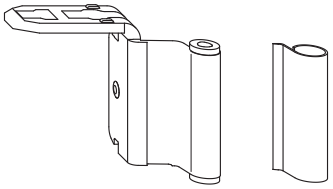

## Sales information

| Description | Part number | Surface | Colour | Box quantity |
|---|---|---|---|---|
| stay hinge DH PVC 12/18-9 | TBWB6000-10001_ | Titan Silver | without | 1 pc |
| | TBWB6000-10006_ | Titan Silver | without | 100 pcs |
| stay hinge DH PVC 12/18-13 | TBWB6010-10001_ | Titan Silver | without | 1 pc |
| | TBWB6010-10006_ | Titan Silver | without | 100 pcs |
| stay hinge DH PVC 12/20-9 | TBWB6020-10001_ | Titan Silver | without | 1 pc |
| | TBWB6020-10006_ | Titan Silver | without | 100 pcs |
| | TBWB6020-10401_ | Titan Silver | RAL9016 | 1 pc |
| | TBWB6020-10405_ | Titan Silver | RAL9016 | 50 pcs |
| | TBWB6020-1H401_ | Titan Silver | F9 titan m dark | 1 pc |
| | TBWB6020-1H405_ | Titan Silver | F9 titan m dark | 50 pcs |
| stay hinge DH PVC 12/20-9 A7700 | TBWB6220-10001_ | Titan Silver | without | 1 pc |
| | TBWB6220-10006_ | Titan Silver | without | 100 pcs |
| stay hinge DH PVC 12/20-12,3 | TBWB6040-10001_ | Titan Silver | without | 1 pc |
| | TBWB6040-10006_ | Titan Silver | without | 100 pcs |
| stay hinge DH PVC 12/20-13 | TBWB6050-10001_ | Titan Silver | without | 1 pc |
| | TBWB6050-10006_ | Titan Silver | without | 100 pcs |
| | TBWB6050-10105_ | Titan Silver | RAL9001 | 50 pcs |
| | TBWB6050-10101_ | Titan Silver | RAL9001 | 50 pcs |
| | TBWB6050-10401_ | Titan Silver | RAL9016 | 1 pc |
| | TBWB6050-10405_ | Titan Silver | RAL9016 | 50 pcs |
| | TBWB6050-11201_ | Titan Silver | RAL8022 | 1 pc |
| | TBWB6050-11205_ | Titan Silver | RAL8022 | 50 pcs |
| | TBWB6050-1H401_ | Titan Silver | F9 titan m dark | 1 pc |
| | TBWB6050-1H405_ | Titan Silver | F9 titan m dark | 50 pcs |
| stay hinge DH PVC 12/20-13 A7700 | TBWB6250-10001_ | Titan Silver | without | 1 pc |
| | TBWB6250-10006_ | Titan Silver | without | 100 pcs |
| stay hinge DH PVC 12/20-14 | TBWB6100-10001_ | Titan Silver | without | 1 pc |
| | TBWB6100-10006_ | Titan Silver | without | 100 pcs |
| | TBWB6100-10401_ | Titan Silver | RAL9016 | 1 pc |
| | TBWB6100-10405_ | Titan Silver | RAL9016 | 50 pcs |
| stay hinge DH PVC 12/20-14 A7700 | TBWB6200-10001_ | Titan Silver | without | 1 pc |
| | TBWB6200-10006_ | Titan Silver | without | 100 pcs |
| stay hinge DH PVC 12/21-13 | TBWB6070-10001_ | Titan Silver | without | 1 pc |
| | TBWB6070-10006_ | Titan Silver | without | 100 pcs |
| | TBWB6070-10401_ | Titan Silver | RAL9016 | 1 pc |
| | TBWB6070-10405_ | Titan Silver | RAL9016 | 50 pcs |
| | TBWB6070-1H401_ | Titan Silver | F9 titan m dark | 1 pc |
| | TBWB6070-1H405_ | Titan Silver | F9 titan m dark | 50 pcs |
| stay hinge DH PVC 12/21-13 A7700 | TBWB6270-10001_ | Titan Silver | without | 1 pc |
| | TBWB6270-10006_ | Titan Silver | without | 100 pcs |
| cover cap W PVC | TKWB0010-00401_ | neutral | RAL9016 | 1 pc |
| | TKWB0010-00406_ | neutral | RAL9016 | 100 pcs |
| | TKWB0010-00408_ | neutral | RAL9016 | 500 pcs |

1.1

## Technical information

| Part number | Description | Airgap | rebate width | Groove axis | sash weight |
|---|---|---|---|---|---|
| TBWS6010-... | stay hinge SF DH PVC 12/18-13 | 12 | 18 | 13 | 80 kg |
| TBWS6020-... | stay hinge SF DH PVC 12/20-9 | 12 | 20 | 9 | 80 kg |
| TBWS6050-... | stay hinge SF DH PVC 12/20-13 | 12 | 20 | 13 | 80 kg |
| TBWS6070-... | stay hinge SF DH PVC 12/21-13 | 12 | 21 | 13 | 80 kg |
| TKWB0010-... | cover cap W PVC | - | - | - | - |

- Profile related corner-bracket, but max. 35° angle
- Applicable on basic security and RC1
- Notch out the sash overlap gasket in the vicinity of the hinge clearance!
- For alternative colours of cover caps, see ‘Cover Caps’ page

- **Please observe:**
  Guidelines/notes on the product and on liability (VHBH directive as well as the other applicable documents listed - directive can be downloaded at www.beschlagindustrie.de/ggsb/richtlinien.asp )
  Specifications from the profile manufacturers/system owners (PVC, light metal) or DIN 68 121 “Wooden profiles for windows and portal doors”

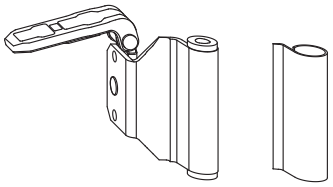

## Sales information

| Description | Part number | Surface | Colour | Box quantity |
|---|---|---|---|---|
| stay hinge SF DH PVC 12/18-13 | TBWS6010-10001_ | Titan Silver | without | 1 pc |
| | TBWS6010-10006_ | Titan Silver | without | 100 pcs |
| stay hinge SF DH PVC 12/20-9 | TBWS6020-10001_ | Titan Silver | without | 1 pc |
| | TBWS6020-10006_ | Titan Silver | without | 100 pcs |
| stay hinge SF DH PVC 12/20-13 | TBWS6050-10001_ | Titan Silver | without | 1 pc |
| | TBWS6050-10006_ | Titan Silver | without | 100 pcs |
| | TBWS6050-10401_ | Titan Silver | RAL9016 | 1 pc |
| | TBWS6050-10405_ | Titan Silver | RAL9016 | 50 pcs |
| | TBWS6050-1H401_ | Titan Silver | F9 titan m dark | 1 pc |
| | TBWS6050-1H405_ | Titan Silver | F9 titan m dark | 50 pcs |
| stay hinge SF DH PVC 12/21-13 | TBWS6070-10001_ | Titan Silver | without | 1 pc |
| | TBWS6070-10006_ | Titan Silver | without | 100 pcs |
| cover cap W PVC | TKWB0010-00401_ | neutral | RAL9016 | 1 pc |
| | TKWB0010-00406_ | neutral | RAL9016 | 100 pcs |
| | TKWB0010-00408_ | neutral | RAL9016 | 500 pcs |

## Technical information

| Part number | Description | sash weight | |
|---|---|---|---|
| TBSL6110-... | top hinge DH PVC diam.3x3 | 100 kg | 4 |
| TBSB6020-... | top hinge pin Poly | - | - |
| TKSL0020-... | cover cap S | - | - |

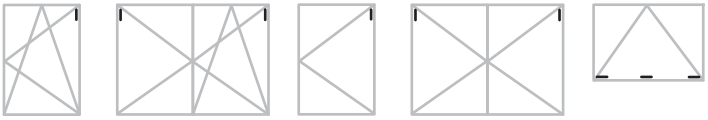

- Jig refer to PDB, line item TABLSE; FABBBB
- Jig for use with tilt sash hinge refer to PDB, line item FAASAW
- For Dimension S refer to PDB
- For alternative colours of cover caps, see ‘Cover Caps’ page

- **Please observe:**
  Guidelines/notes on the product and on liability (VHBH directive as well as the other applicable documents listed - directive can be downloaded at www.beschlagindustrie.de/ggsb/richtlinien.asp )
  Specifications from the profile manufacturers/system owners (PVC, light metal) or DIN 68 121 “Wooden profiles for windows and portal doors”

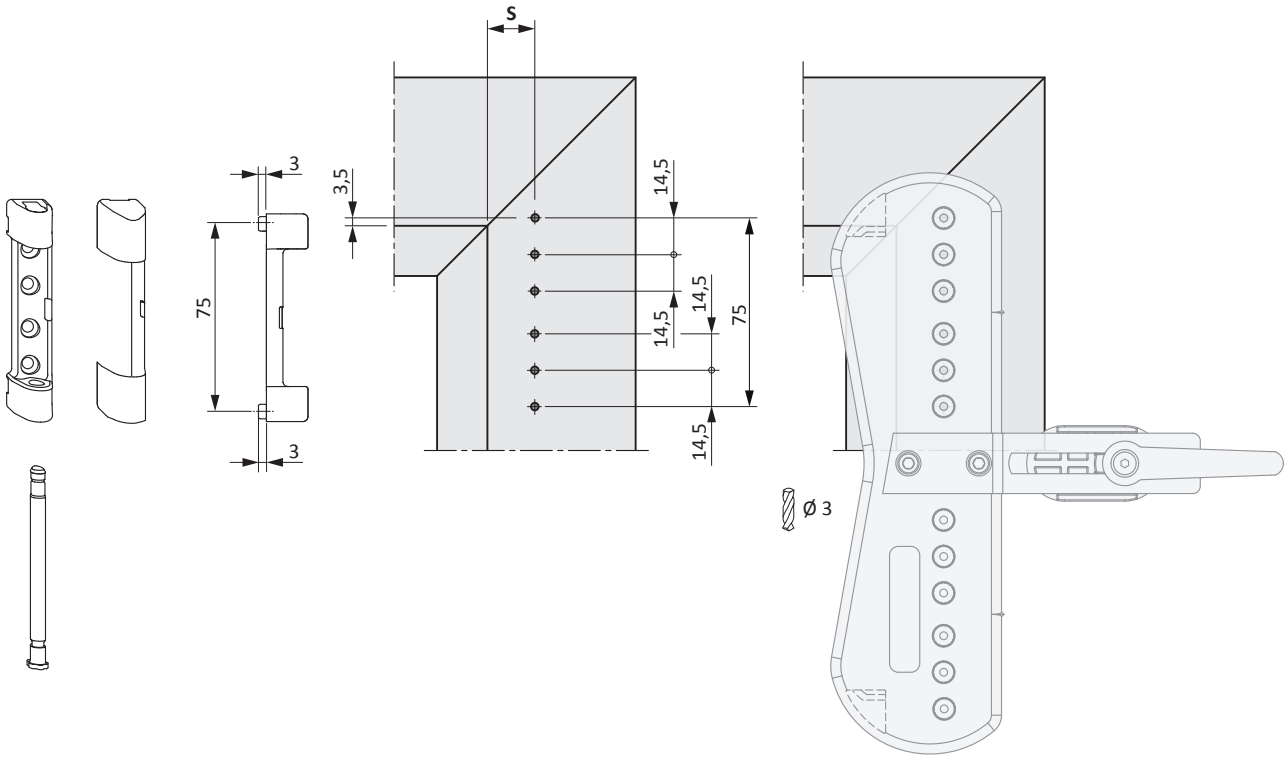

## Sales information

| Description | Part number | Surface | Colour | Box quantity |
|---|---|---|---|---|
| top hinge DH PVC diam.3x3 | TBSL6110-10001_ | Titan Silver | without | 1 pc |
| | TBSL6110-10006_ | Titan Silver | without | 100 pcs |
| | TBSL6110-10101_ | Titan Silver | RAL9001 | 1 pc |
| | TBSL6110-10106_ | Titan Silver | RAL9001 | 100 pcs |
| | TBSL6110-10401_ | Titan Silver | RAL9016 | 1 pc |
| | TBSL6110-10406_ | Titan Silver | RAL9016 | 100 pcs |
| top hinge pin Poly | TBSB6020-10001_ | Titan Silver | without | 1 pc |
| | TBSB6020-10006_ | Titan Silver | without | 100 pcs |
| | TBSB6020-10008_ | Titan Silver | without | 500 pcs |
| cover cap S | TKSL0020-00401_ | neutral | RAL9016 | 1 pc |
| | TKSL0020-00406_ | neutral | RAL9016 | 100 pcs |
| | TKSL0020-00408_ | neutral | RAL9016 | 500 pcs |

## Technical information

| Part number | Description | sash weight | |
|---|---|---|---|
| TBSL6120-... | top hinge DH PVC diam.6x3 | 100 kg | 4 |
| TBSB6020-... | top hinge pin Poly | - | - |
| TKSL0020-... | cover cap S | - | - |

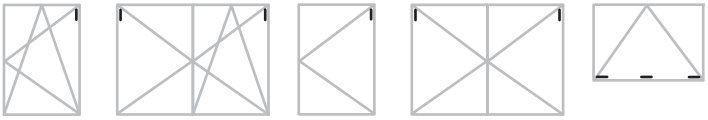

- Jig refer to PDB, line item TABLSE
- Jig for use with tilt sash hinge refer to PDB, line item FAASAW
- For Dimension S refer to PDB
- For alternative colours of cover caps, see ‘Cover Caps’ page

- **Please observe:**
  Guidelines/notes on the product and on liability (VHBH directive as well as the other applicable documents listed - directive can be downloaded at www.beschlagindustrie.de/ggsb/richtlinien.asp )
  Specifications from the profile manufacturers/system owners (PVC, light metal) or DIN 68 121 “Wooden profiles for windows and portal doors”

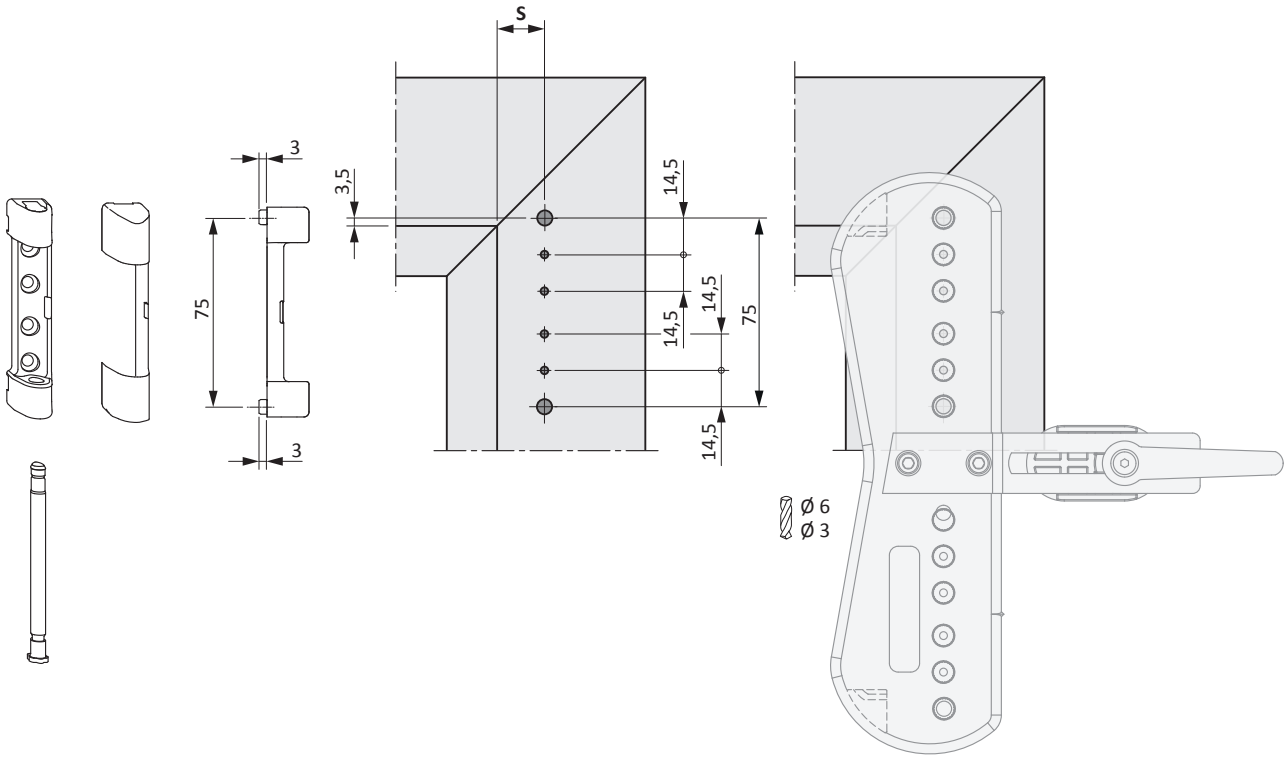

## Sales information

| Description | Part number | Surface | Colour | Box quantity |
|---|---|---|---|---|
| top hinge DH PVC diam.6x3 | TBSL6120-10001_ | Titan Silver | without | 1 pc |
| | TBSL6120-10006_ | Titan Silver | without | 100 pcs |
| | TBSL6120-10101_ | Titan Silver | RAL9001 | 1 pc |
| | TBSL6120-10106_ | Titan Silver | RAL9001 | 100 pcs |
| | TBSL6120-10401_ | Titan Silver | RAL9016 | 1 pc |
| | TBSL6120-10406_ | Titan Silver | RAL9016 | 100 pcs |
| | TBSL6120-11201_ | Titan Silver | RAL8022 | 1 pc |
| | TBSL6120-11206_ | Titan Silver | RAL8022 | 100 pcs |
| | TBSL6120-1H401_ | Titan Silver | F9 titan m dark | 1 pc |
| | TBSL6120-1H406_ | Titan Silver | F9 titan m dark | 100 pcs |
| top hinge pin Poly | TBSB6020-10001_ | Titan Silver | without | 1 pc |
| | TBSB6020-10006_ | Titan Silver | without | 100 pcs |
| | TBSB6020-10008_ | Titan Silver | without | 500 pcs |
| cover cap S | TKSL0020-00401_ | neutral | RAL9016 | 1 pc |
| | TKSL0020-00406_ | neutral | RAL9016 | 100 pcs |
| | TKSL0020-00408_ | neutral | RAL9016 | 500 pcs |

## Technical information

| Part number | Description | sash weight | |
|---|---|---|---|
| TBSL6150-... | top hinge DH PVC diam.6x8 | 100 kg | 4 |
| TBSB6020-... | top hinge pin Poly | - | - |
| TKSL0020-... | cover cap S | - | - |

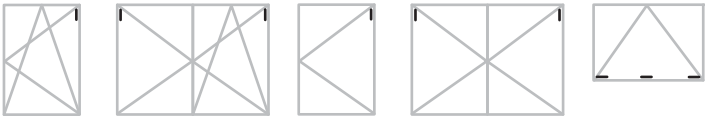

- Jig refer to PDB, line item TABLSE
- Jig for use with tilt sash hinge refer to PDB, line item FAASAW
- For Dimension S refer to PDB
- For alternative colours of cover caps, see ‘Cover Caps’ page

- **Please observe:**
  Guidelines/notes on the product and on liability (VHBH directive as well as the other applicable documents listed - directive can be downloaded at www.beschlagindustrie.de/ggsb/richtlinien.asp )
  Specifications from the profile manufacturers/system owners (PVC, light metal) or DIN 68 121 “Wooden profiles for windows and portal doors”

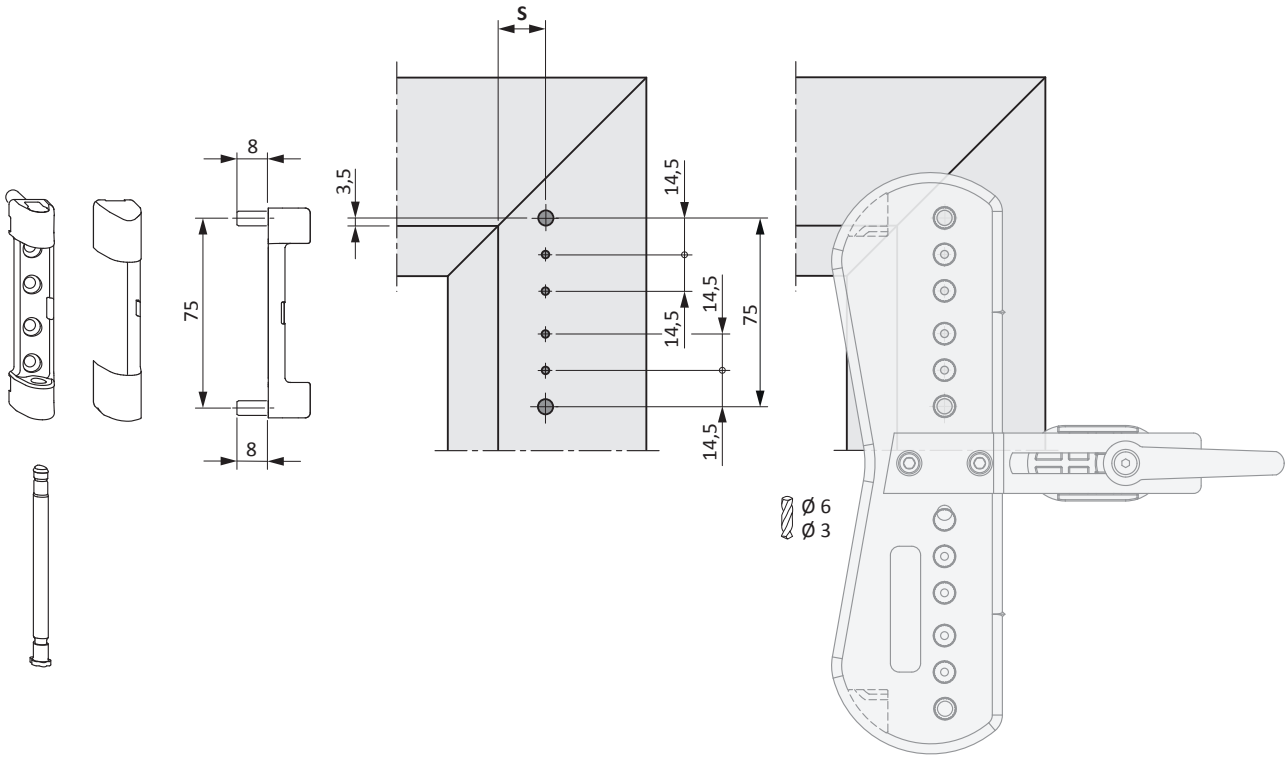

## Sales information

| Description | Part number | Surface | Colour | Box quantity |
|---|---|---|---|---|
| top hinge DH PVC diam.6x8 | TBSL6150-10001_ | Titan Silver | without | 1 pc |
| | TBSL6150-10006_ | Titan Silver | without | 100 pcs |
| | TBSL6150-10401_ | Titan Silver | RAL9016 | 1 pc |
| | TBSL6150-10406_ | Titan Silver | RAL9016 | 100 pcs |
| | TBSL6150-11201_ | Titan Silver | RAL8022 | 1 pc |
| | TBSL6150-11206_ | Titan Silver | RAL8022 | 100 pcs |
| top hinge pin Poly | TBSB6020-10001_ | Titan Silver | without | 1 pc |
| | TBSB6020-10006_ | Titan Silver | without | 100 pcs |
| | TBSB6020-10008_ | Titan Silver | without | 500 pcs |
| cover cap S | TKSL0020-00401_ | neutral | RAL9016 | 1 pc |
| | TKSL0020-00406_ | neutral | RAL9016 | 100 pcs |
| | TKSL0020-00408_ | neutral | RAL9016 | 500 pcs |

## Technical information

| Part number | Description | sash weight | |
|---|---|---|---|
| TBSL6140-... | top hinge DH PVC diam.6x24 | 130 kg | 4 |
| TBSB6020-... | top hinge pin Poly | - | - |
| TKSL0020-... | cover cap S | - | - |

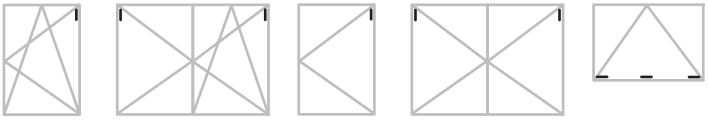

- Jig refer to PDB, line item TABLSE
- Jig for use with tilt sash hinge refer to PDB, line item FAASAW
- For Dimension S refer to PDB
- For alternative colours of cover caps, see ‘Cover Caps’ page

- **Please observe:**
  Guidelines/notes on the product and on liability (VHBH directive as well as the other applicable documents listed - directive can be downloaded at www.beschlagindustrie.de/ggsb/richtlinien.asp )
  Specifications from the profile manufacturers/system owners (PVC, light metal) or DIN 68 121 “Wooden profiles for windows and portal doors”

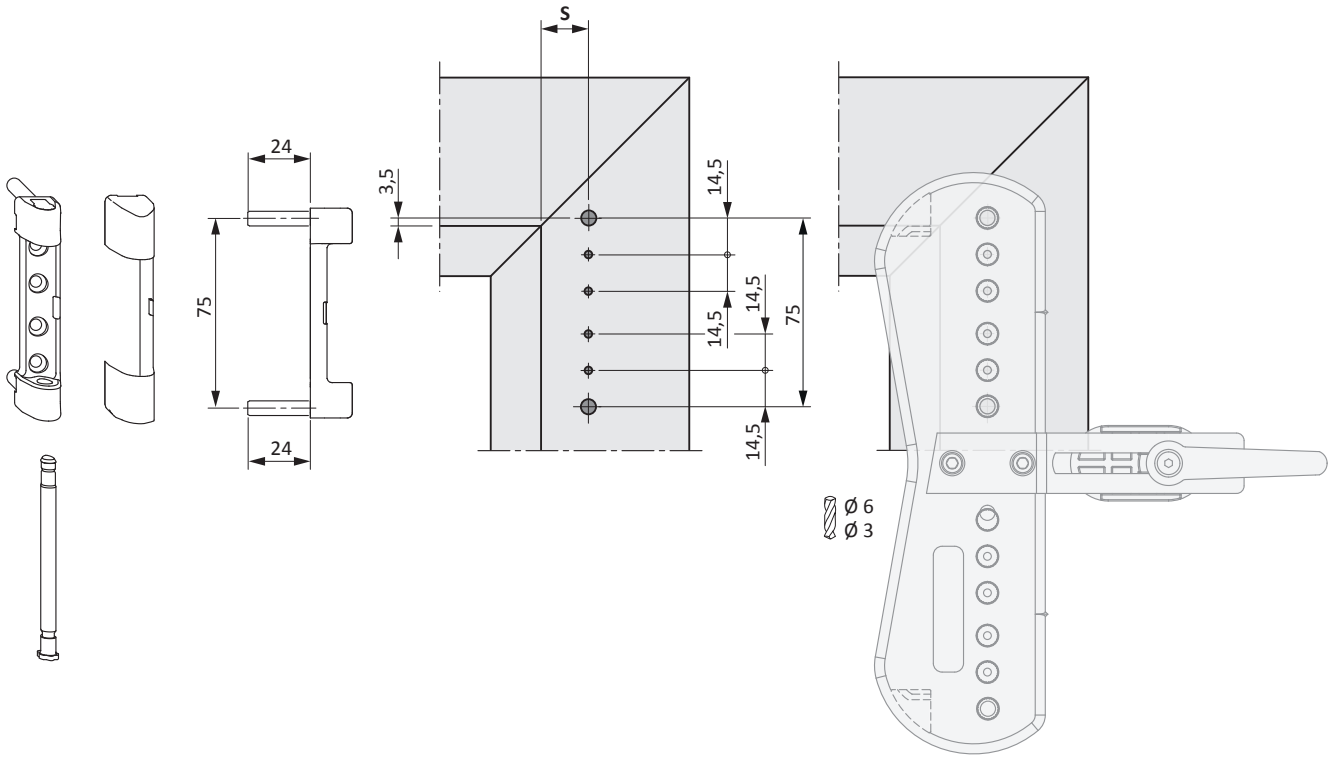

## Sales information

| Description | Part number | Surface | Colour | Box quantity |
|---|---|---|---|---|
| top hinge DH PVC diam.6x24 | TBSL6140-10001_ | Titan Silver | without | 1 pc |
| | TBSL6140-10006_ | Titan Silver | without | 100 pcs |
| | TBSL6140-10101_ | Titan Silver | RAL9001 | 1 pc |
| | TBSL6140-10106_ | Titan Silver | RAL9001 | 100 pcs |
| | TBSL6140-10401_ | Titan Silver | RAL9016 | 1 pc |
| | TBSL6140-10406_ | Titan Silver | RAL9016 | 100 pcs |
| | TBSL6140-11201_ | Titan Silver | RAL8022 | 1 pc |
| | TBSL6140-11206_ | Titan Silver | RAL8022 | 100 pcs |
| | TBSL6140-1H401_ | Titan Silver | F9 titan m dark | 1 pc |
| | TBSL6140-1H406_ | Titan Silver | F9 titan m dark | 100 pcs |
| top hinge pin Poly | TBSB6020-10001_ | Titan Silver | without | 1 pc |
| | TBSB6020-10006_ | Titan Silver | without | 100 pcs |
| | TBSB6020-10008_ | Titan Silver | without | 500 pcs |
| cover cap S | TKSL0020-00401_ | neutral | RAL9016 | 1 pc |
| | TKSL0020-00406_ | neutral | RAL9016 | 100 pcs |
| | TKSL0020-00408_ | neutral | RAL9016 | 500 pcs |

## Technical information

| Part number | Description | sash weight |
|---|---|---|
| 700006 | bag FAVORIT-RB KF | 80 kg |
| FKSL0030-... | cover cap S 7 RB | - |
| FKWB0031-... | cover cap W RB rh. | - |
| FKWB0032-... | cover cap W RB lh. | - |

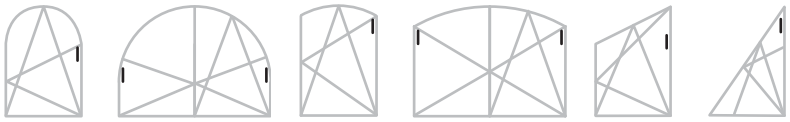

- For alternative colours of cover caps, see ‘Cover Caps’ page

- **Please observe:**
  Guidelines/notes on the product and on liability (VHBH directive as well as the other applicable documents listed - directive can be downloaded at www.beschlagindustrie.de/ggsb/richtlinien.asp )
  Specifications from the profile manufacturers/system owners (PVC, light metal) or DIN 68 121 “Wooden profiles for windows and portal doors”

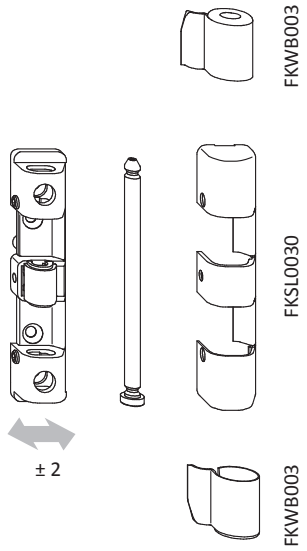


## Sales information

| Description | Part number | Surface | Colour | Box quantity |
|---|---|---|---|---|
| bag FAVORIT-RB KF | 700006 | Titan Silver | without | 1 pc |
| | 275085 | Titan Silver | without | 5 pcs |
| cover cap S 7 RB | FKSL0030-00401_ | neutral | RAL9016 | 1 pc |
| | FKSL0030-00406_ | neutral | RAL9016 | 100 pcs |
| cover cap W RB rh. | FKWB0031-00401_ | neutral | RAL9016 | 1 pc |
| | FKWB0031-00406_ | neutral | RAL9016 | 100 pcs |
| cover cap W RB lh. | FKWB0032-00401_ | neutral | RAL9016 | 1 pc |
| | FKWB0032-00406_ | neutral | RAL9016 | 100 pcs |

## Drill holes and routings

- Dimension Z varies according to arch size and must be marked accordingly
- Jig, refer to PDB, FABLSE

- 1. Start of the arch
  2. Start of the segmental arch
  3. Frame rebate edge

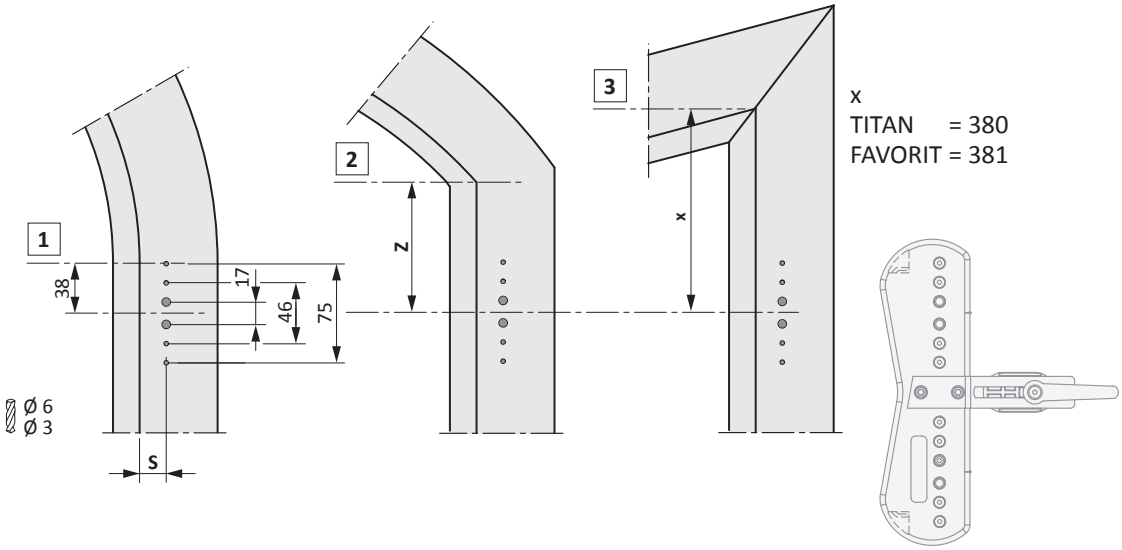

## Technical information

| Part number | Description | Airgap | rebate width | Groove axis | |
|---|---|---|---|---|---|
| TBFB6020-... | sash hinge PVC 12/20-9 | 12 | 20 | 9 | 2 |
| TBFB6050-... | sash hinge PVC 12/20-13 | 12 | 20 | 13 | 2 |
| TKWB0010-... | cover cap W PVC | - | - | - | - |

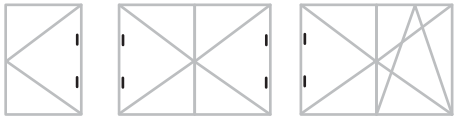

- Notch out the sash overlap gasket in the vicinity of the hinge clearance!
- For alternative colours of cover caps, see ‘Cover Caps’ page

- **Please observe:**
  Guidelines/notes on the product and on liability (VHBH directive as well as the other applicable documents listed - directive can be downloaded at www.beschlagindustrie.de/ggsb/richtlinien.asp )
  Specifications from the profile manufacturers/system owners (PVC, light metal) or DIN 68 121 “Wooden profiles for windows and portal doors”

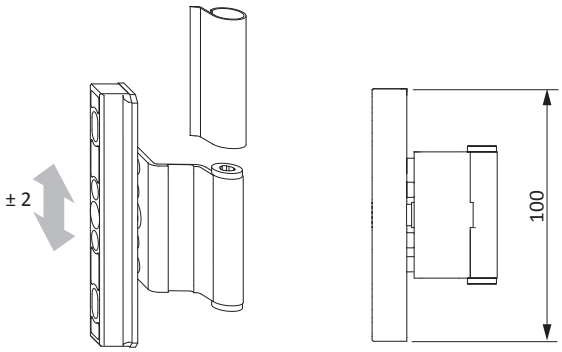


## Sales information

| Description | Part number | Surface | Colour | Box quantity |
|---|---|---|---|---|
| sash hinge PVC 12/20-9 | TBFB6020-10001_ | Titan Silver | without | 1 pc |
| | TBFB6020-10005_ | Titan Silver | without | 50 pcs |
| | TBFB6020-10401_ | Titan Silver | RAL9016 | 1 pc |
| | TBFB6020-10405_ | Titan Silver | RAL9016 | 50 pcs |
| sash hinge PVC 12/20-13 | TBFB6050-10001_ | Titan Silver | without | 1 pc |
| | TBFB6050-10005_ | Titan Silver | without | 50 pcs |
| | TBFB6050-10401_ | Titan Silver | RAL9016 | 1 pc |
| | TBFB6050-10405_ | Titan Silver | RAL9016 | 50 pcs |
| cover cap W PVC | TKWB0010-00401_ | neutral | RAL9016 | 1 pc |
| | TKWB0010-00406_ | neutral | RAL9016 | 100 pcs |
| | TKWB0010-00408_ | neutral | RAL9016 | 500 pcs |

1.1

## Technical information

| Part number | Description | Airgap | rebate width | Groove axis | sash weight | |
|---|---|---|---|---|---|---|
| TBKF6000-... | tilt sash hinge PVC 12/18-9 | 12 | 18 | 9 | 50 kg | 2 |
| TBKF6010-... | tilt sash hinge PVC 12/18-13 | 12 | 18 | 13 | 50 kg | 2 |
| TBKF6020-... | tilt sash hinge PVC 12/20-9 | 12 | 20 | 9 | 50 kg | 2 |
| TBKF6030-... | tilt sash hinge PVC 12/20-10 | 12 | 20 | 10 | 50 kg | 2 |
| TBKF6050-... | tilt sash hinge PVC 12/20-13 | 12 | 20 | 13 | 50 kg | 2 |
| TBKF6100-... | tilt sash hinge PVC 12/20-14 | 12 | 20 | 14 | 50 kg | 2 |
| TBKF6070-... | tilt sash hinge PVC 12/21-13 | 12 | 21 | 13 | 50 kg | 2 |
| TKWB0010-... | cover cap W PVC | - | - | - | - | - |

- Notch out the sash overlap gasket in the vicinity of the hinge clearance!
- For alternative colours of cover caps, see ‘Cover Caps’ page

- **Please observe:**
  Guidelines/notes on the product and on liability (VHBH directive as well as the other applicable documents listed - directive can be downloaded at www.beschlagindustrie.de/ggsb/richtlinien.asp )
  Specifications from the profile manufacturers/system owners (PVC, light metal) or DIN 68 121 “Wooden profiles for windows and portal doors”

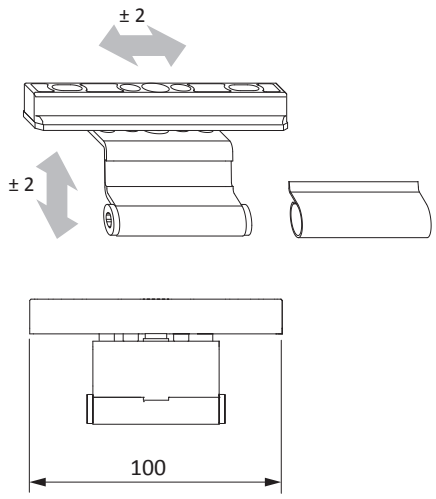

## Sales information

| Description | Part number | Surface | Colour | Box quantity |
|---|---|---|---|---|
| tilt sash hinge PVC 12/18-9 | TBKF6000-10001_ | Titan Silver | without | 1 pc |
| | TBKF6000-10005_ | Titan Silver | without | 50 pcs |
| tilt sash hinge PVC 12/18-13 | TBKF6010-10001_ | Titan Silver | without | 1 pc |
| | TBKF6010-10005_ | Titan Silver | without | 50 pcs |
| tilt sash hinge PVC 12/20-9 | TBKF6020-10001_ | Titan Silver | without | 1 pc |
| | TBKF6020-10005_ | Titan Silver | without | 50 pcs |
| tilt sash hinge PVC 12/20-10 | TBKF6030-10001_ | Titan Silver | without | 1 pc |
| | TBKF6030-10005_ | Titan Silver | without | 50 pcs |
| tilt sash hinge PVC 12/20-13 | TBKF6050-10001_ | Titan Silver | without | 1 pc |
| | TBKF6050-10005_ | Titan Silver | without | 50 pcs |
| | TBKF6050-10101_ | Titan Silver | RAL9001 | 1 pc |
| | TBKF6050-10105_ | Titan Silver | RAL9001 | 50 pcs |
| | TBKF6050-10401_ | Titan Silver | RAL9016 | 1 pc |
| | TBKF6050-10405_ | Titan Silver | RAL9016 | 50 pcs |
| | TBKF6050-1H401_ | Titan Silver | F9 titan m dark | 1 pc |
| | TBKF6050-1H405_ | Titan Silver | F9 titan m dark | 50 pcs |
| tilt sash hinge PVC 12/20-14 | TBKF6100-10001_ | Titan Silver | without | 1 pc |
| | TBKF6100-10005_ | Titan Silver | without | 50 pcs |
| | TBKF6100-10401_ | Titan Silver | RAL9016 | 1 pc |
| | TBKF6100-10405_ | Titan Silver | RAL9016 | 50 pcs |
| tilt sash hinge PVC 12/21-13 | TBKF6070-10001_ | Titan Silver | without | 1 pc |
| | TBKF6070-10005_ | Titan Silver | without | 50 pcs |
| | TBKF6070-10401_ | Titan Silver | RAL9016 | 1 pc |
| | TBKF6070-10405_ | Titan Silver | RAL9016 | 50 pcs |
| | TBKF6070-1H401_ | Titan Silver | F9 titan m dark | 1 pc |
| | TBKF6070-1H405_ | Titan Silver | F9 titan m dark | 50 pcs |
| cover cap W PVC | TKWB0010-00401_ | neutral | RAL9016 | 1 pc |
| | TKWB0010-00406_ | neutral | RAL9016 | 100 pcs |
| | TKWB0010-00408_ | neutral | RAL9016 | 500 pcs |

1.1

## Technical information

| Part number | Description | Airgap | rebate width | Groove axis | sash weight | |
|---|---|---|---|---|---|---|
| TBDF1110-... | turn only hinge RB DH PVC 12/18-9 | 12 | 18 | 9 | 80 kg | 4 |
| TBDF1130-... | turn only hinge RB DH PVC 12/20-9 | 12 | 20 | 9 | 80 kg | 4 |
| TBDF1120-... | turn only hinge RB DH PVC 12/20-13 | 12 | 20 | 13 | 80 kg | 4 |
| TKWB0010-... | cover cap W PVC | - | - | - | - | - |

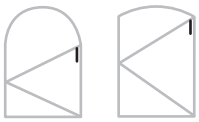

- For alternative colours of cover caps, see ‘Cover Caps’ page

- **Please observe:**
  Guidelines/notes on the product and on liability (VHBH directive as well as the other applicable documents listed - directive can be downloaded at www.beschlagindustrie.de/ggsb/richtlinien.asp )
  Specifications from the profile manufacturers/system owners (PVC, light metal) or DIN 68 121 “Wooden profiles for windows and portal doors”

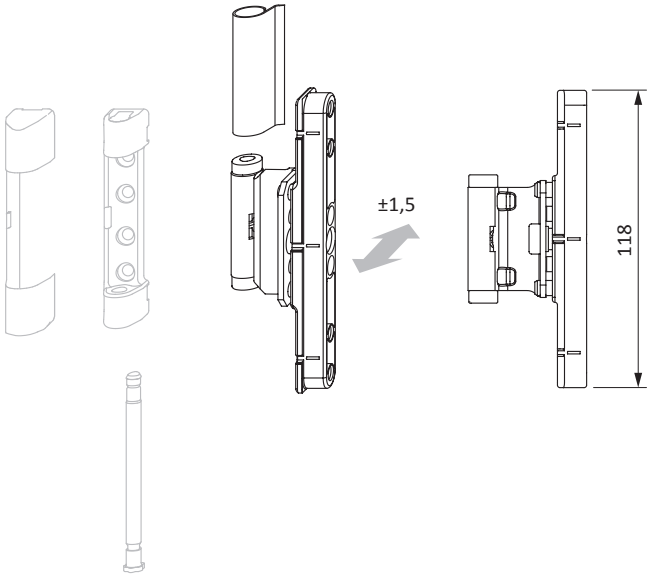


## Sales information

| Description | Part number | Surface | Colour | Box quantity |
|---|---|---|---|---|
| turn only hinge RB DH PVC 12/18-9 | TBDF1110-10001_ | Titan Silver | without | 1 pc |
| | TBDF1110-10004_ | Titan Silver | without | 25 pcs |
| turn only hinge RB DH PVC 12/20-9 | TBDF1130-10001_ | Titan Silver | without | 1 pc |
| | TBDF1130-10004_ | Titan Silver | without | 25 pcs |
| turn only hinge RB DH PVC 12/20-13 | TBDF1120-10001_ | Titan Silver | without | 1 pc |
| | TBDF1120-10004_ | Titan Silver | without | 25 pcs |
| | TBDF1120-1H401_ | Titan Silver | F9 titan m dark | 1 pc |
| | TBDF1120-1H404_ | Titan Silver | F9 titan m dark | 25 pcs |
| cover cap W PVC | TKWB0010-00401_ | neutral | RAL9016 | 1 pc |
| | TKWB0010-00406_ | neutral | RAL9016 | 100 pcs |
| | TKWB0010-00408_ | neutral | RAL9016 | 500 pcs |

## Technical information

| Part number | Description | Airgap | rebate width | Groove axis | sash weight | |
|---|---|---|---|---|---|---|
| FBDF1010-... | turn only hinge RB PVC 12/18-9 | 12 | 18 | 9 | 80 kg | 4 |
| FBDF1020-... | turn only hinge RB PVC 12/20-9 | 12 | 20 | 9 | 80 kg | 4 |
| FBDF1040-... | turn only hinge RB PVC 12/20-13 | 12 | 20 | 13 | 80 kg | 4 |

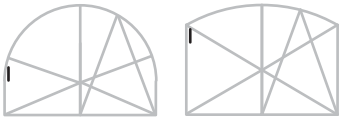

- **Please observe:**
  Guidelines/notes on the product and on liability (VHBH directive as well as the other applicable documents listed - directive can be downloaded at www.beschlagindustrie.de/ggsb/richtlinien.asp )
  Specifications from the profile manufacturers/system owners (PVC, light metal) or DIN 68 121 “Wooden profiles for windows and portal doors”

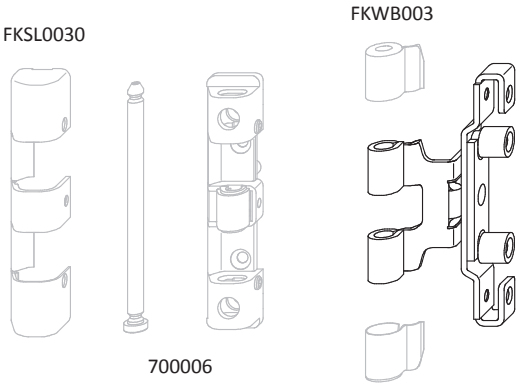


## Sales information

| Description | Part number | Surface | Colour | Box quantity |
|---|---|---|---|---|
| turn only hinge RB PVC 12/18-9 | FBDF1010-10001_ | Titan Silver | without | 1 pc |
| | FBDF1010-10004_ | Titan Silver | without | 25 pcs |
| turn only hinge RB PVC 12/20-9 | FBDF1020-10001_ | Titan Silver | without | 1 pc |
| | FBDF1020-10004_ | Titan Silver | without | 25 pcs |
| turn only hinge RB PVC 12/20-13 | FBDF1040-10001_ | Titan Silver | without | 1 pc |
| | FBDF1040-10004_ | Titan Silver | without | 25 pcs |
| | FBDF1040-1H401_ | Titan Silver | F9 titan m dark | 1 pc |
| | FBDF1040-1H404_ | Titan Silver | F9 titan m dark | 25 pcs |

## Technical information

| Part number | Description | sash weight | |
|---|---|---|---|
| TBDF6010-... | turn only hinge timber TITAN .. | 80 kg | 2 |
| TRUP0050-... | filling piece DFB | - | 0 |
| TRUP7010-... | filling piece DFB SL | - | 0 |
| TKWB0010-... | cover cap W PVC | - | - |
| TKDF0010-... | cover cap DFB | - | - |

- Note:
  Observe the total sash weight of the interconnected sashes with regard to the max. permissable sash weight of the hinge side!"
- The overall sash rebate width of the connected sashes may not exceed 1650 mm
- Fenestration screw fixing: 4x50 mm
- Turn only hinge H requirements:
  2 pieces on FFH 480-1400 mm
  3 pieces on FFH 1401-2400 mm
  4 pieces on FFH 2401-3000 mm

- **Please observe:**
  Guidelines/notes on the product and on liability (VHBH directive as well as the other applicable documents listed - directive can be downloaded at www.beschlagindustrie.de/ggsb/richtlinien.asp )
  Specifications from the profile manufacturers/system owners (PVC, light metal) or DIN 68 121 “Wooden profiles for windows and portal doors”

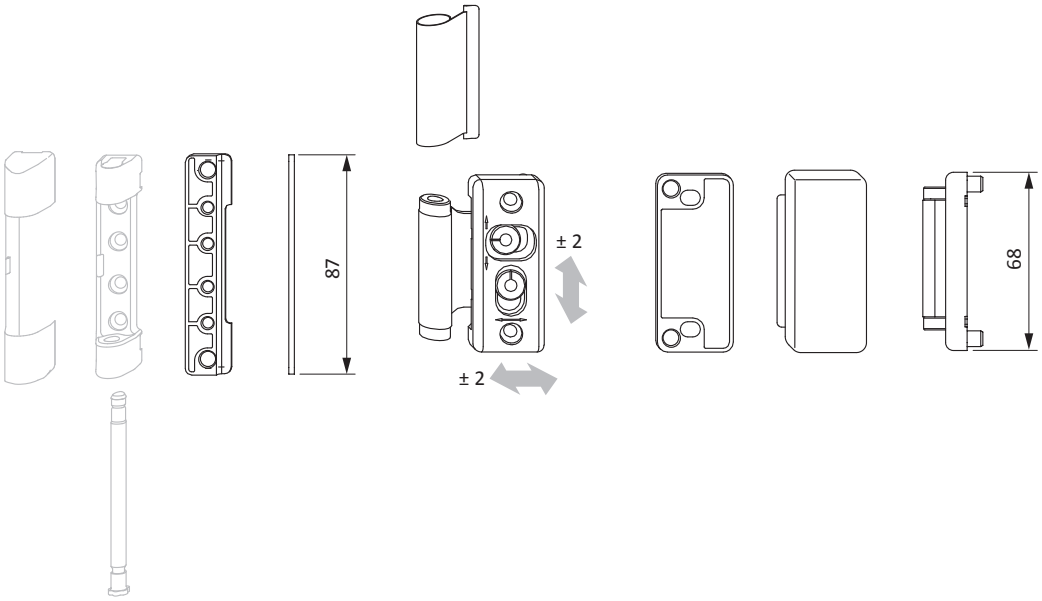

## Sales information

| Description | Part number | Surface | Colour | Box quantity |
|---|---|---|---|---|
| turn only hinge timber TITAN .. | TBDF6010-10001_ | Titan Silver | without | 1 pc |
| | TBDF6010-10004_ | Titan Silver | without | 25 pcs |
| filling piece DFB | TRUP0050-00201_ | neutral | RAL9003 | 1 pc |
| | TRUP0050-00206_ | neutral | RAL9003 | 100 pcs |
| | TRUP0050-01101_ | neutral | RAL8019 | 1 pc |
| | TRUP0050-01106_ | neutral | RAL8019 | 100 pcs |
| | TRUP0050-L2401_ | lacquered | EV1/EV1 | 1 pc |
| | TRUP0050-L2406_ | lacquered | EV1/EV1 | 100 pcs |
| filling piece DFB SL | TRUP7010-00201_ | neutral | RAL9003 | 1 pc |
| | TRUP7010-00206_ | neutral | RAL9003 | 100 pcs |
| | TRUP7010-01101_ | neutral | RAL8019 | 1 pc |
| | TRUP7010-01106_ | neutral | RAL8019 | 100 pcs |
| cover cap W PVC | TKWB0010-00201_ | neutral | RAL9003 | 1 pc |
| | TKWB0010-00206_ | neutral | RAL9003 | 100 pcs |
| | TKWB0010-01101_ | neutral | RAL8019 | 1 pc |
| | TKWB0010-01106_ | neutral | RAL8019 | 100 pcs |
| | TKWB0010-L2401_ | lacquered | EV1/EV1 | 1 pc |
| | TKWB0010-L2406_ | lacquered | EV1/EV1 | 100 pcs |
| cover cap DFB | TKDF0010-00201_ | neutral | RAL9003 | 1 pc |
| | TKDF0010-00205_ | neutral | RAL9003 | 50 pcs |
| | TKDF0010-01101_ | neutral | RAL8019 | 1 pc |
| | TKDF0010-01105_ | neutral | RAL8019 | 50 pcs |
| | TKDF0010-L2401_ | lacquered | EV1/EV1 | 1 pc |
| | TKDF0010-L2405_ | lacquered | EV1/EV1 | 50 pcs |

1.1

## Installation advice

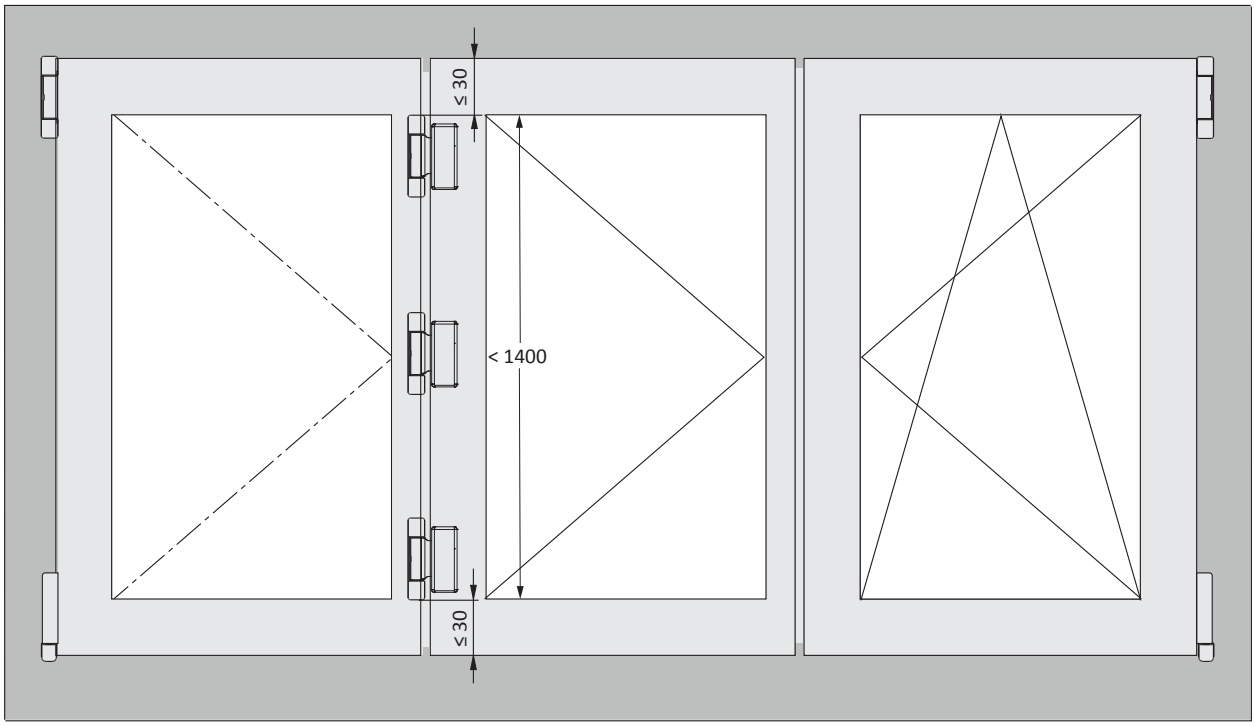


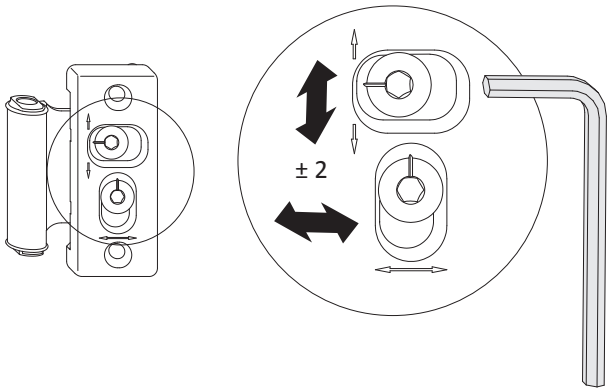

## Technical information

| Part number | Description | sash weight | |
|---|---|---|---|
| 713563 | bottom hinge PVC top | 80 kg | 4 |
| 713556 | bottom hinge PVC bottom | 80 kg | 4 |
| FBFB0041-... | bottom sash hinge rh. | 80 kg | 3 |
| FBFB0042-... | bottom sash hinge lh. | 80 kg | 3 |
| FBFB0051-... | top sash hinge rh. | 80 kg | 3 |
| FBFB0052-... | top sash hinge lh. | 80 kg | 3 |
| FKDZ1000-... | cover cap DZB PVC | - | - |

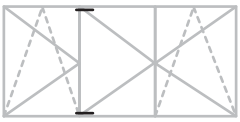

- French-window hardware for 3-sashed windows and balcony-doors
- For basic security
- 1. packer FL on connection sashes as Tilt + Turn sash
- A - jig when designing connecting sash as turn sash
- B - jig when designing connecting sash as tilt and turn sash

- **Please observe:**
  Guidelines/notes on the product and on liability (VHBH directive as well as the other applicable documents listed - directive can be downloaded at www.beschlagindustrie.de/ggsb/richtlinien.asp )
  Specifications from the profile manufacturers/system owners (PVC, light metal) or DIN 68 121 “Wooden profiles for windows and portal doors”

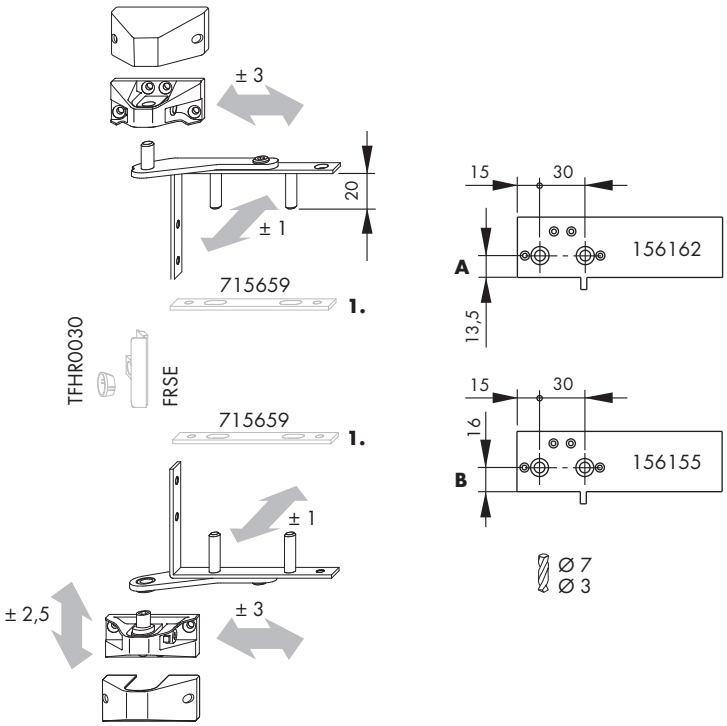

## Sales information

| Description | Part number | Surface | Colour | Box quantity |
|---|---|---|---|---|
| bottom hinge PVC top | 713563 | Titan Silver | without | 1 pc |
| | 301982 | Titan Silver | without | 100 pcs |
| bottom hinge PVC bottom | 713556 | Titan Silver | without | 1 pc |
| | 301975 | Titan Silver | without | 100 pcs |
| bottom sash hinge rh. | FBFB0041-10001_ | Titan Silver | without | 1 pc |
| | FBFB0041-10005_ | Titan Silver | without | 50 pcs |
| | FBFB0041-10201_ | Titan Silver | RAL9003 | 1 pc |
| | FBFB0041-10205_ | Titan Silver | RAL9003 | 50 pcs |
| bottom sash hinge lh. | FBFB0042-10001_ | Titan Silver | without | 1 pc |
| | FBFB0042-10005_ | Titan Silver | without | 50 pcs |
| | FBFB0042-10201_ | Titan Silver | RAL9003 | 1 pc |
| | FBFB0042-10205_ | Titan Silver | RAL9003 | 50 pcs |
| top sash hinge rh. | FBFB0051-10001_ | Titan Silver | without | 1 pc |
| | FBFB0051-10005_ | Titan Silver | without | 50 pcs |
| | FBFB0051-10201_ | Titan Silver | RAL9003 | 1 pc |
| | FBFB0051-10205_ | Titan Silver | RAL9003 | 50 pcs |
| top sash hinge lh. | FBFB0052-10001_ | Titan Silver | without | 1 pc |
| | FBFB0052-10005_ | Titan Silver | without | 50 pcs |
| | FBFB0052-10201_ | Titan Silver | RAL9003 | 1 pc |
| | FBFB0052-10205_ | Titan Silver | RAL9003 | 50 pcs |
| cover cap DZB PVC | FKDZ1000-00201_ | neutral | RAL9003 | 1 pc |
| | FKDZ1000-00204_ | neutral | RAL9003 | 25 pcs |

## Drill holes and routings

- Use of jigs:
  Ø 7 mm holes for fixing pins of bottom hinge and sash hinge
  Ø 3 mm holes for fixing screws of bottom hinge

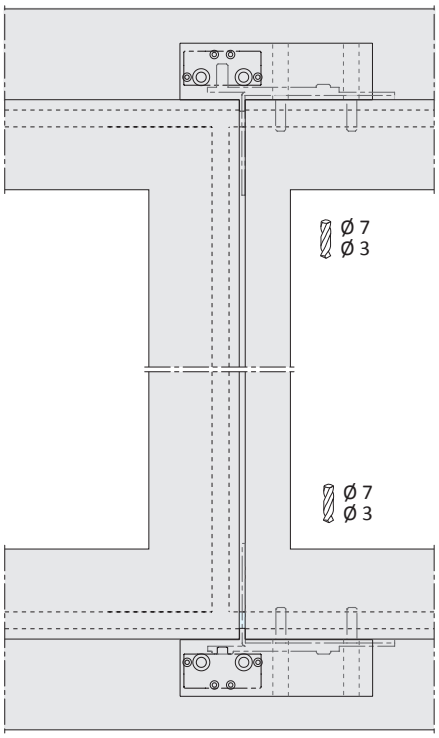


## Installation advice

- * track size inc. cover cap + 1 mm and packer 2.5 mm

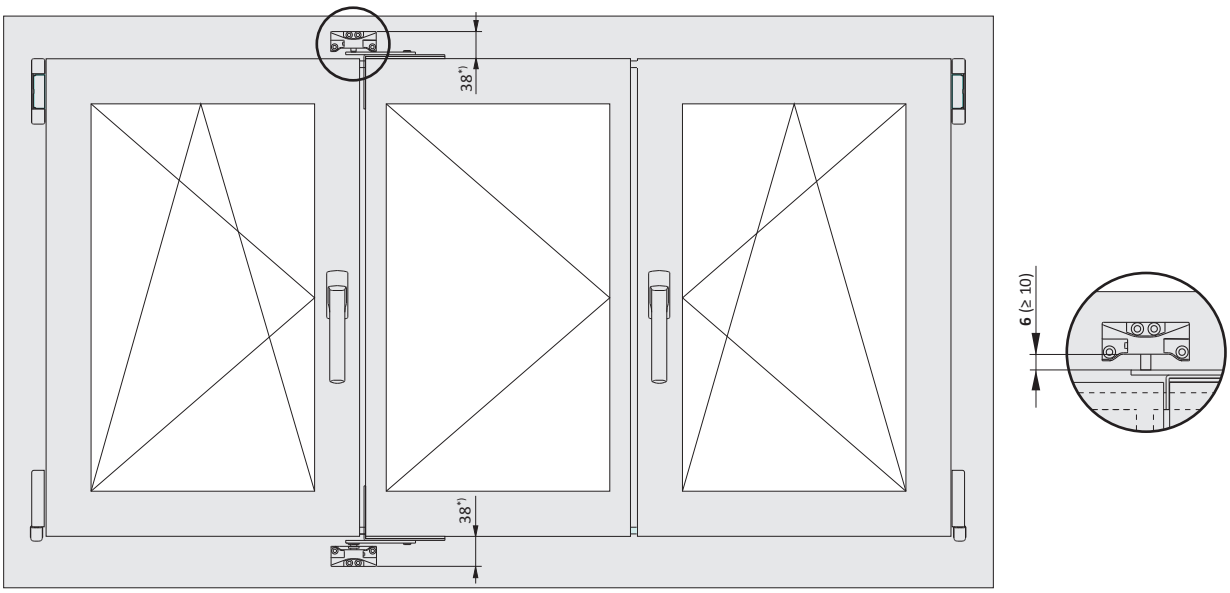

## Technical information

| Part number | Description | Airgap | Groove axis | sash weight | |
|---|---|---|---|---|---|
| ZBKF1000-... | turn/tilt sash hinge SF PVC 12/..-13 | 12 | 13 | 50 kg | 6 |
| ZMKF0020-... | cover ZBKF .. | - | - | - | - |

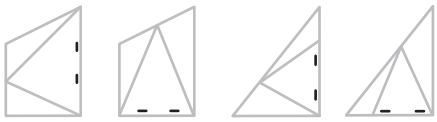

- When used as a turn only hinge, a turn restrictor or friction stay should generally be inserted
- Turn only sash requirements (sash rebate width max. 1100 mm):
  with sash rebate width (mm) 1200 = 2 No.
  with sash rebate width (mm) 1201-1800 = 3 No.
  with sash rebate width (mm) 1801-2400 = 4 No.
  with sash rebate width (mm) 2401-3000 = 5 No.
- When used as a tilt sash hinge, a tilt sash stay (TSKF0020) should generally be inserted
- Tilt sash requirements:
  with sash rebate width (mm) 1000 = 2 No.
  with sash rebate width (mm) 1001-1500 = 3 No.
  with sash rebate width (mm) 1501-2000 = 4 No.
- The cleaning position of the tilt sash should be secured by a security cable/catch plate (ZSFP0010, ZSFP0010) and protected from being slammed down by the customer
- When using the cover caps in the hinge area, the opening angle of the sash is reduced from 90° to approx. 85°.

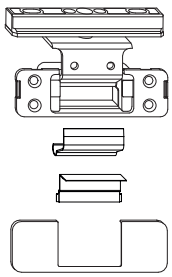

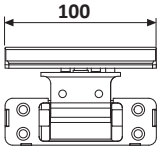


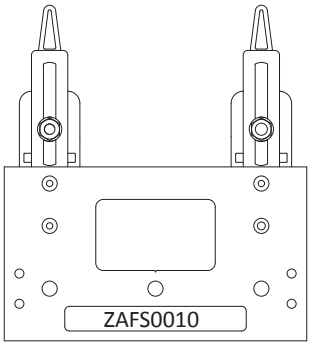


## Sales information

| Description | Part number | Surface | Colour | Box quantity |
|---|---|---|---|---|
| turn/tilt sash hinge SF PVC 12/..-13 | ZBKF1000-10001_ | Titan Silver | without | 1 pc |
| | ZBKF1000-10003_ | Titan Silver | without | 20 pcs |
| cover ZBKF .. | ZMKF0020-00205_ | neutral | RAL9003 | 50 pcs |
| | ZMKF0020-LV001_ | lacquered | special colour | 1 pc |

## Drill holes and routings

- * Minimum dimension for 90° opening is equal to rebate thickness
  notch out sash rebate seal in the hinge clearance area !

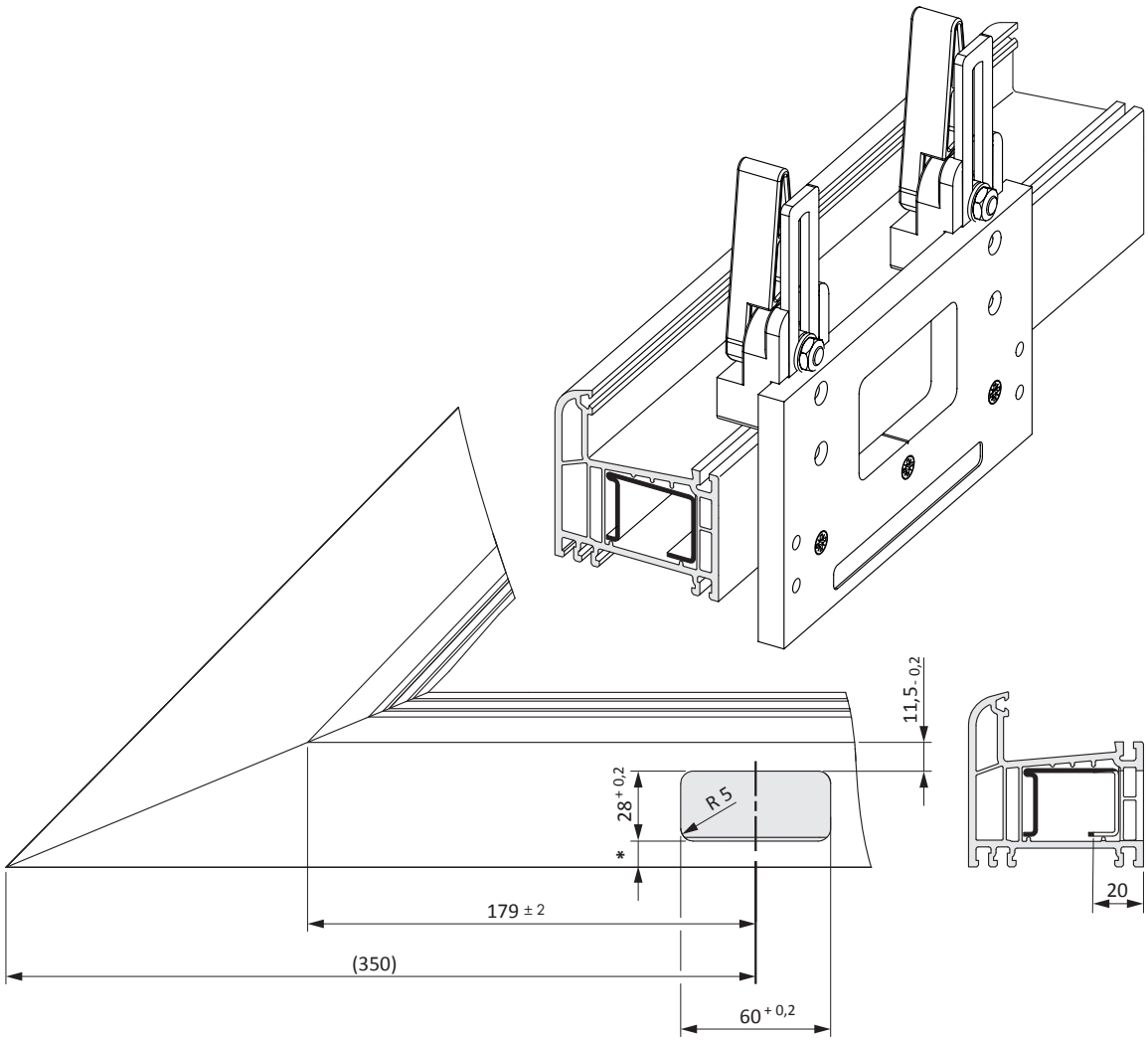


## Technical details

- 1 = remove bearing cover
  2 = safety plate R opened
  3 = safety plate L opened

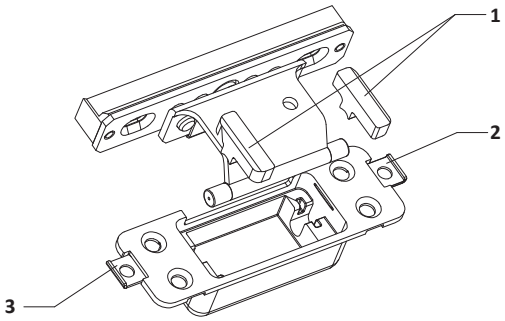

- In the assembled state, safety plate R/L is inserted in up to the stop

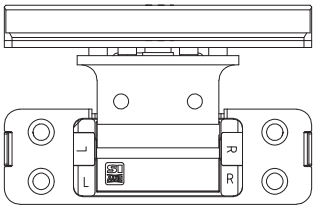

## Technical information

| Part number | Description |
|---|---|
| ZSFP0010-... | security cable 300 |
| ZSFP0020-... | catch plate 130 |

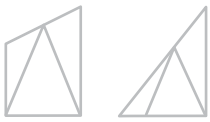

- For tilt sash elements in special shapes
- The positioning of the security cable/catch plate depends on the design
- Packer refer to PDB line item FRUP02

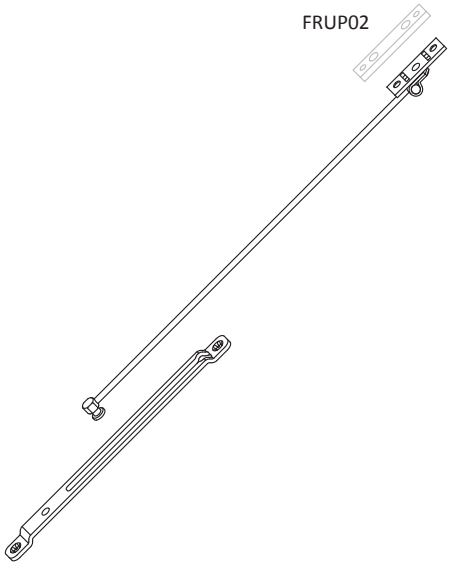


## Sales information

| Description | Part number | Surface | Colour | Box quantity |
|---|---|---|---|---|
| security cable 300 | ZSFP0010-10001_ | Titan Silver | without | 1 pc |
| | ZSFP0010-10002_ | Titan Silver | without | 10 pcs |
| catch plate 130 | ZSFP0020-10001_ | Titan Silver | without | 1 pc |
| | ZSFP0020-10002_ | Titan Silver | without | 10 pcs |

1.1

## Technical information

| Part number | Description |
|---|---|
| TKEB0020-... | cover cap EB |
| FKFE0011-... | cover cap FEB rh. |
| FKFE0012-... | cover cap FEB lh. |
| TKFE7011-... | cover cap FEB rh. |
| TKFE7012-... | cover cap FEB lh. |
| TKFE8031-... | cover cap FEB ALU16 rh. |
| TKFE8032-... | cover cap FEB ALU16 lh. |
| TKEO0010-... | cover cap EL O MB |
| TKEU0010-... | cover cap EL U |
| TKWB0010-... | cover cap W PVC |
| TKSL0020-... | cover cap S |
| FKSL0030-... | cover cap S 7 RB |
| FKWB0031-... | cover cap W RB rh. |
| FKWB0032-... | cover cap W RB lh. |
| TKEB0030-... | bag closing cap EB |

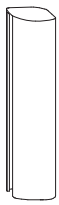
TKEB0020

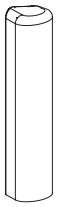
FKFE0011/12

TKFE07011/12

TKFE8031/32

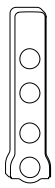
TKEO0010

TKEU0010

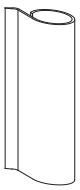
TKWB0010

TKSL0020

FKWB0031/32

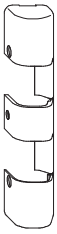
FKSL0030

TKEB0030

## Sales information

| RAL9001 | | | |
|---|---|---|---|
| **Description** | **Part number** | **Surface** | **Box quantity** |
| cover cap EB | TKEB0020-00101_ | neutral | 1 pc |
| | TKEB0020-00106_ | neutral | 100 pcs |
| | TKEB0020-00108_ | neutral | 500 pcs |
| cover cap FEB rh. | FKFE0011-00101_ | neutral | 1 pc |
| | FKFE0011-00106_ | neutral | 100 pcs |
| | FKFE0011-00108_ | neutral | 500 pcs |
| cover cap FEB lh. | FKFE0012-00101_ | neutral | 1 pc |
| | FKFE0012-00106_ | neutral | 100 pcs |
| | FKFE0012-00108_ | neutral | 500 pcs |
| cover cap FEB rh. | TKFE7011-00101_ | neutral | 1 pc |
| | TKFE7011-00106_ | neutral | 100 pcs |
| cover cap FEB lh. | TKFE7012-00101_ | neutral | 1 pc |
| | TKFE7012-00106_ | neutral | 100 pcs |
| cover cap FEB ALU16 rh. | - | | |
| cover cap FEB ALU16 lh. | - | | |
| cover cap EL O MB | TKEO0010-00101_ | neutral | 1 pc |
| | TKEO0010-00106_ | neutral | 100 pcs |
| | TKEO0010-00108_ | neutral | 500 pcs |
| cover cap EL U | TKEU0010-00101_ | neutral | 1 pc |
| | TKEU0010-00106_ | neutral | 100 pcs |
| | TKEU0010-00108_ | neutral | 500 pcs |
| cover cap W PVC | TKWB0010-00101_ | neutral | 1 pc |
| | TKWB0010-00106_ | neutral | 100 pcs |
| | TKWB0010-00108_ | neutral | 500 pcs |
| cover cap S | TKSL0020-00101_ | neutral | 1 pc |
| | TKSL0020-00106_ | neutral | 100 pcs |
| | TKSL0020-00108_ | neutral | 500 pcs |
| cover cap S 7 RB | FKSL0030-L0101_ | lacquered | 1 pc |
| | FKSL0030-L0106_ | lacquered | 100 pcs |
| cover cap W RB rh. | FKWB0031-L0101_ | lacquered | 1 pc |
| | FKWB0031-L0106_ | lacquered | 100 pcs |
| cover cap W RB lh. | FKWB0032-L0101_ | lacquered | 1 pc |
| | FKWB0032-L0106_ | lacquered | 100 pcs |
| bag closing cap EB | - | | |
| **RAL9003** | | | |
| **Description** | **Part number** | **Surface** | **Box quantity** |
| cover cap EB | TKEB0020-00201_ | neutral | 1 pc |
| | TKEB0020-00206_ | neutral | 100 pcs |
| cover cap FEB rh. | FKFE0011-00201_ | neutral | 1 pc |
| | FKFE0011-00206_ | neutral | 100 pcs |
| | FKFE0011-00208_ | neutral | 500 pcs |
| cover cap FEB lh. | FKFE0012-00201_ | neutral | 1 pc |
| | FKFE0012-00206_ | neutral | 100 pcs |
| | FKFE0012-00208_ | neutral | 500 pcs |
| cover cap FEB rh. | TKFE7011-00201_ | neutral | 1 pc |
| | TKFE7011-00206_ | neutral | 100 pcs |
| cover cap FEB lh. | TKFE7012-00201_ | neutral | 1 pc |
| | TKFE7012-00206_ | neutral | 100 pcs |
| cover cap FEB ALU16 rh. | - | | |
| cover cap FEB ALU16 lh. | - | | |

## Sales information

| RAL9003 | | | |
|---|---|---|---|
| **Description** | **Part number** | **Surface** | **Box quantity** |
| cover cap EL O MB | TKEO0010-00201_ | neutral | 1 pc |
| | TKEO0010-00206_ | neutral | 100 pcs |
| cover cap EL U | TKEU0010-00201_ | neutral | 1 pc |
| | TKEU0010-00206_ | neutral | 100 pcs |
| cover cap W PVC | TKWB0010-00201_ | neutral | 1 pc |
| | TKWB0010-00206_ | neutral | 100 pcs |
| cover cap S | TKSL0020-00201_ | neutral | 1 pc |
| | TKSL0020-00206_ | neutral | 100 pcs |
| cover cap S 7 RB | FKSL0030-00201_ | neutral | 1 pc |
| | FKSL0030-00206_ | neutral | 100 pcs |
| cover cap W RB rh. | FKWB0031-00201_ | neutral | 1 pc |
| | FKWB0031-00206_ | neutral | 100 pcs |
| cover cap W RB lh. | FKWB0032-00201_ | neutral | 1 pc |
| | FKWB0032-00206_ | neutral | 100 pcs |
| bag closing cap EB | - | | |
| **RAL9016** | | | |
| **Description** | **Part number** | **Surface** | **Box quantity** |
| cover cap EB | TKEB0020-00401_ | neutral | 1 pc |
| | TKEB0020-00406_ | neutral | 100 pcs |
| | TKEB0020-00408_ | neutral | 500 pcs |
| cover cap FEB rh. | FKFE0011-00401_ | neutral | 1 pc |
| | FKFE0011-00408_ | neutral | 500 pcs |
| cover cap FEB lh. | FKFE0012-00401_ | neutral | 1 pc |
| | FKFE0012-00408_ | neutral | 500 pcs |
| cover cap FEB rh. | TKFE7011-00401_ | neutral | 1 pc |
| | TKFE7011-00406_ | neutral | 100 pcs |
| | TKFE7011-00408_ | neutral | 500 pcs |
| cover cap FEB lh. | TKFE7012-00401_ | neutral | 1 pc |
| | TKFE7012-00406_ | neutral | 100 pcs |
| | TKFE7012-00408_ | neutral | 500 pcs |
| cover cap FEB ALU16 rh. | TKFE8031-00401_ | neutral | 1 pc |
| | TKFE8031-00406_ | neutral | 100 pcs |
| cover cap FEB ALU16 lh. | TKFE8032-00401_ | neutral | 1 pc |
| | TKFE8032-00406_ | neutral | 100 pcs |
| cover cap EL O MB | TKEO0010-00401_ | neutral | 1 pc |
| | TKEO0010-00406_ | neutral | 100 pcs |
| | TKEO0010-00408_ | neutral | 500 pcs |
| cover cap EL U | TKEU0010-00401_ | neutral | 1 pc |
| | TKEU0010-00406_ | neutral | 100 pcs |
| | TKEU0010-00408_ | neutral | 500 pcs |
| cover cap W PVC | TKWB0010-00401_ | neutral | 1 pc |
| | TKWB0010-00406_ | neutral | 100 pcs |
| | TKWB0010-00408_ | neutral | 500 pcs |
| cover cap S | TKSL0020-00401_ | neutral | 1 pc |
| | TKSL0020-00406_ | neutral | 100 pcs |
| | TKSL0020-00408_ | neutral | 500 pcs |
| cover cap S 7 RB | FKSL0030-00401_ | neutral | 1 pc |
| | FKSL0030-00406_ | neutral | 100 pcs |
| cover cap W RB rh. | FKWB0031-00401_ | neutral | 1 pc |
| | FKWB0031-00406_ | neutral | 100 pcs |

## Sales information

| RAL9016 | | | |
|---|---|---|---|
| **Description** | **Part number** | **Surface** | **Box quantity** |
| cover cap W RB lh. | FKWB0032-00401_ | neutral | 1 pc |
| | FKWB0032-00406_ | neutral | 100 pcs |
| bag closing cap EB | TKEB0030-00401_ | neutral | 1 pc |
| | TKEB0030-00408_ | neutral | 500 pcs |
| **RAL1013** | | | |
| **Description** | **Part number** | **Surface** | **Box quantity** |
| cover cap EB | TKEB0020-00501_ | neutral | 1 pc |
| | TKEB0020-00506_ | neutral | 100 pcs |
| cover cap FEB rh. | FKFE0011-00501_ | neutral | 1 pc |
| | FKFE0011-00506_ | neutral | 100 pcs |
| cover cap FEB lh. | FKFE0012-00501_ | neutral | 1 pc |
| | FKFE0012-00506_ | neutral | 100 pcs |
| cover cap FEB rh. | TKFE7011-00501_ | neutral | 100 pcs |
| | TKFE7011-00506_ | neutral | 100 pcs |
| cover cap FEB lh. | TKFE7012-00501_ | neutral | 100 pcs |
| | TKFE7012-00506_ | neutral | 100 pcs |
| cover cap FEB ALU16 rh. | TKFE8031-00501_ | neutral | 1 pc |
| | TKFE8031-00506_ | neutral | 100 pcs |
| cover cap FEB ALU16 lh. | TKFE8032-00501_ | neutral | 1 pc |
| | TKFE8032-00506_ | neutral | 100 pcs |
| cover cap EL O MB | TKEO0010-00501_ | neutral | 1 pc |
| | TKEO0010-00506_ | neutral | 100 pcs |
| cover cap EL U | TKEU0010-00501_ | neutral | 1 pc |
| | TKEU0010-00506_ | neutral | 100 pcs |
| cover cap W PVC | TKWB0010-00501_ | neutral | 1 pc |
| | TKWB0010-00506_ | neutral | 100 pcs |
| cover cap S | TKSL0020-00501_ | neutral | 1 pc |
| | TKSL0020-00506_ | neutral | 100 pcs |
| cover cap S 7 RB | - | | |
| cover cap W RB rh. | FKWB0031-00501_ | neutral | 1 pc |
| cover cap W RB lh. | FKWB0032-00501_ | neutral | 1 pc |
| bag closing cap EB | - | | |
| **old white** | | | |
| **Description** | **Part number** | **Surface** | **Box quantity** |
| cover cap EB | TKEB0020-00701_ | neutral | 1 pc |
| | TKEB0020-00706_ | neutral | 100 pcs |
| cover cap FEB rh. | FKFE0011-00701_ | neutral | 1 pc |
| | FKFE0011-00706_ | neutral | 100 pcs |
| cover cap FEB lh. | FKFE0012-00701_ | neutral | 1 pc |
| | FKFE0012-00706_ | neutral | 100 pcs |
| cover cap FEB rh. | - | | |
| cover cap FEB lh. | - | | |
| cover cap FEB ALU16 rh. | - | | |
| cover cap FEB ALU16 lh. | - | | |
| cover cap EL O MB | TKEO0010-00701_ | neutral | 1 pc |
| | TKEO0010-00706_ | neutral | 100 pcs |
| cover cap EL U | TKEU0010-00701_ | neutral | 1 pc |
| | TKEU0010-00706_ | neutral | 100 pcs |
| cover cap W PVC | TKWB0010-00701_ | neutral | 1 pc |
| | TKWB0010-00706_ | neutral | 100 pcs |

1.1

## Sales information

| old white | | | |
|---|---|---|---|
| **Description** | **Part number** | **Surface** | **Box quantity** |
| cover cap S | TKSL0020-00701_ | neutral | 1 pc |
| | TKSL0020-00706_ | neutral | 100 pcs |
| cover cap S 7 RB | - | | |
| cover cap W RB rh. | FKWB0031-00701_ | neutral | 1 pc |
| | FKWB0031-00706_ | neutral | 100 pcs |
| cover cap W RB lh. | - | | |
| bag closing cap EB | - | | |
| **RAL8019** | | | |
| **Description** | **Part number** | **Surface** | **Box quantity** |
| cover cap EB | TKEB0020-01101_ | neutral | 1 pc |
| | TKEB0020-01106_ | neutral | 100 pcs |
| cover cap FEB rh. | FKFE0011-01101_ | neutral | 1 pc |
| | FKFE0011-01106_ | neutral | 100 pcs |
| | FKFE0011-01108_ | neutral | 500 pcs |
| cover cap FEB lh. | FKFE0012-01101_ | neutral | 1 pc |
| | FKFE0012-01106_ | neutral | 100 pcs |
| | FKFE0012-01108_ | neutral | 500 pcs |
| cover cap FEB rh. | TKFE7011-01101_ | neutral | 1 pc |
| | TKFE7011-01106_ | neutral | 100 pcs |
| cover cap FEB lh. | TKFE7012-01101_ | neutral | 1 pc |
| | TKFE7012-01106_ | neutral | 100 pcs |
| cover cap FEB ALU16 rh. | - | | |
| cover cap FEB ALU16 lh. | - | | |
| cover cap EL O MB | TKEO0010-01101_ | neutral | 1 pc |
| | TKEO0010-01106_ | neutral | 100 pcs |
| cover cap EL U | TKEU0010-01101_ | neutral | 1 pc |
| | TKEU0010-01106_ | neutral | 100 pcs |
| cover cap W PVC | TKWB0010-01101_ | neutral | 1 pc |
| | TKWB0010-01106_ | neutral | 100 pcs |
| cover cap S | TKSL0020-01101_ | neutral | 1 pc |
| | TKSL0020-01106_ | neutral | 100 pcs |
| cover cap S 7 RB | FKSL0030-01101_ | neutral | 1 pc |
| | FKSL0030-01106_ | neutral | 100 pcs |
| cover cap W RB rh. | FKWB0031-01101_ | neutral | 1 pc |
| | FKWB0031-01106_ | neutral | 100 pcs |
| cover cap W RB lh. | FKWB0032-01101_ | neutral | 1 pc |
| | FKWB0032-01106_ | neutral | 100 pcs |
| bag closing cap EB | - | | |
| **RAL8022** | | | |
| **Description** | **Part number** | **Surface** | **Box quantity** |
| cover cap EB | TKEB0020-01201_ | neutral | 1 pc |
| | TKEB0020-01206_ | neutral | 100 pcs |
| | TKEB0020-01208_ | neutral | 500 pcs |
| cover cap FEB rh. | FKFE0011-01201_ | neutral | 1 pc |
| | FKFE0011-01206_ | neutral | 100 pcs |
| cover cap FEB lh. | FKFE0012-01201_ | neutral | 1 pc |
| | FKFE0012-01206_ | neutral | 100 pcs |
| cover cap FEB rh. | TKFE7011-01201_ | neutral | 1 pc |
| | TKFE7011-01206_ | neutral | 100 pcs |
| | TKFE7011-01208_ | neutral | 500 pcs |

## Sales information

| RAL8022 | | | |
|---|---|---|---|
| **Description** | **Part number** | **Surface** | **Box quantity** |
| cover cap FEB lh. | TKFE7012-01201_ | neutral | 1 pc |
| | TKFE7012-01206_ | neutral | 100 pcs |
| | TKFE7012-01208_ | neutral | 500 pcs |
| cover cap FEB ALU16 rh. | TKFE8031-01201_ | neutral | 1 pc |
| | TKFE8031-01206_ | neutral | 100 pcs |
| cover cap FEB ALU16 lh. | TKFE8032-01201_ | neutral | 1 pc |
| | TKFE8032-01206_ | neutral | 100 pcs |
| cover cap EL O MB | TKEO0010-01201_ | neutral | 1 pc |
| | TKEO0010-01206_ | neutral | 100 pcs |
| | TKEO0010-01208_ | neutral | 500 pcs |
| cover cap EL U | TKEU0010-01201_ | neutral | 1 pc |
| | TKEU0010-01206_ | neutral | 100 pcs |
| | TKEU0010-01208_ | neutral | 500 pcs |
| cover cap W PVC | TKWB0010-01201_ | neutral | 1 pc |
| | TKWB0010-01206_ | neutral | 100 pcs |
| | TKWB0010-01208_ | neutral | 500 pcs |
| cover cap S | TKSL0020-01201_ | neutral | 1 pc |
| | TKSL0020-01206_ | neutral | 100 pcs |
| | TKSL0020-01208_ | neutral | 500 pcs |
| cover cap S 7 RB | FKSL0030-01201_ | neutral | 1 pc |
| | FKSL0030-01206_ | neutral | 100 pcs |
| cover cap W RB rh. | FKWB0031-01201_ | neutral | 1 pc |
| | FKWB0031-01206_ | neutral | 100 pcs |
| cover cap W RB lh. | FKWB0032-01201_ | neutral | 1 pc |
| | FKWB0032-01206_ | neutral | 100 pcs |
| bag closing cap EB | - | | |
| **RAL8001** | | | |
| **Description** | **Part number** | **Surface** | **Box quantity** |
| cover cap EB | TKEB0020-01601_ | neutral | 1 pc |
| | TKEB0020-01606_ | neutral | 100 pcs |
| cover cap FEB rh. | - | | |
| cover cap FEB lh. | - | | |
| cover cap FEB rh. | - | | |
| cover cap FEB lh. | - | | |
| cover cap FEB ALU16 rh. | - | | |
| cover cap FEB ALU16 lh. | - | | |
| cover cap EL O MB | TKEO0010-01601_ | neutral | 1 pc |
| | TKEO0010-01606_ | neutral | 100 pcs |
| cover cap EL U | TKEU0010-01601_ | neutral | 1 pc |
| | TKEU0010-01606_ | neutral | 100 pcs |
| cover cap W PVC | TKWB0010-01601_ | neutral | 1 pc |
| | TKWB0010-01606_ | neutral | 100 pcs |
| cover cap S | TKSL0020-01601_ | neutral | 1 pc |
| | TKSL0020-01606_ | neutral | 100 pcs |
| cover cap S 7 RB | FKSL0030-L1601_ | lacquered | 1 pc |
| | FKSL0030-L1606_ | lacquered | 100 pcs |
| cover cap W RB rh. | FKWB0031-L1601_ | lacquered | 1 pc |
| | FKWB0031-L1606_ | lacquered | 100 pcs |
| cover cap W RB lh. | FKWB0032-L1601_ | lacquered | 1 pc |
| | FKWB0032-L1606_ | lacquered | 100 pcs |

## Sales information

| RAL8001 | | | |
|---|---|---|---|
| **Description** | **Part number** | **Surface** | **Box quantity** |
| bag closing cap EB | - | | |
| **RAL7035** | | | |
| **Description** | **Part number** | **Surface** | **Box quantity** |
| cover cap EB | TKEB0020-02101_ | neutral | 1 pc |
| | TKEB0020-02106_ | neutral | 100 pcs |
| cover cap FEB rh. | - | | |
| cover cap FEB lh. | - | | |
| cover cap FEB rh. | - | | |
| cover cap FEB lh. | - | | |
| cover cap FEB ALU16 rh. | - | | |
| cover cap FEB ALU16 lh. | - | | |
| cover cap EL O MB | TKEO0010-02101_ | neutral | 1 pc |
| | TKEO0010-02106_ | neutral | 100 pcs |
| cover cap EL U | TKEU0010-02101_ | neutral | 1 pc |
| | TKEU0010-02106_ | neutral | 100 pcs |
| cover cap W PVC | TKWB0010-02101_ | neutral | 1 pc |
| | TKWB0010-02106_ | neutral | 100 pcs |
| cover cap S | TKSL0020-02101_ | neutral | 1 pc |
| | TKSL0020-02106_ | neutral | 100 pcs |
| cover cap S 7 RB | - | | |
| cover cap W RB rh. | - | | |
| cover cap W RB lh. | - | | |
| bag closing cap EB | TKEB0030-02101_ | neutral | 1 pc |
| | TKEB0030-02108_ | neutral | 500 pcs |
| **EV1/EV1** | | | |
| **Description** | **Part number** | **Surface** | **Box quantity** |
| cover cap EB | TKEB0020-L2401_ | lacquered | 1 pc |
| | TKEB0020-L2406_ | lacquered | 100 pcs |
| cover cap FEB rh. | FKFE0011-L2401_ | lacquered | 1 pc |
| | FKFE0011-L2408_ | lacquered | 500 pcs |
| cover cap FEB lh. | FKFE0012-L2401_ | lacquered | 1 pc |
| | FKFE0012-L2408_ | lacquered | 500 pcs |
| cover cap FEB rh. | TKFE7011-L2401_ | lacquered | 1 pc |
| | TKFE7011-L2406_ | lacquered | 100 pcs |
| | TKFE7011-L2408_ | lacquered | 500 pcs |
| cover cap FEB lh. | TKFE7012-L2401_ | lacquered | 1 pc |
| | TKFE7012-L2406_ | lacquered | 100 pcs |
| | TKFE7012-L2408_ | lacquered | 500 pcs |
| cover cap FEB ALU16 rh. | TKFE8031-L2401_ | lacquered | 1 pc |
| | TKFE8031-L2406_ | lacquered | 100 pcs |
| cover cap FEB ALU16 lh. | TKFE8032-L2401_ | lacquered | 1 pc |
| | TKFE8032-L2406_ | lacquered | 100 pcs |
| cover cap EL O MB | TKEO0010-L2401_ | lacquered | 1 pc |
| | TKEO0010-L2406_ | lacquered | 100 pcs |
| | TKEO0010-L2408_ | lacquered | 500 pcs |
| cover cap EL U | TKEU0010-L2401_ | lacquered | 1 pc |
| | TKEU0010-L2406_ | lacquered | 100 pcs |
| | TKEU0010-L2408_ | lacquered | 500 pcs |
| cover cap W PVC | TKWB0010-L2401_ | lacquered | 1 pc |
| | TKWB0010-L2406_ | lacquered | 100 pcs |

## Sales information

| EV1/EV1 | | | |
|---|---|---|---|
| **Description** | **Part number** | **Surface** | **Box quantity** |
| cover cap S | TKSL0020-L2401_ | lacquered | 1 pc |
| | TKSL0020-L2406_ | lacquered | 100 pcs |
| | TKSL0020-L2408_ | lacquered | 500 pcs |
| cover cap S 7 RB | FKSL0030-L2401_ | lacquered | 1 pc |
| | FKSL0030-L2406_ | lacquered | 100 pcs |
| cover cap W RB rh. | FKWB0031-L2401_ | lacquered | 1 pc |
| | FKWB0031-L2406_ | lacquered | 100 pcs |
| cover cap W RB lh. | FKWB0032-L2401_ | lacquered | 1 pc |
| | FKWB0032-L2406_ | lacquered | 100 pcs |
| bag closing cap EB | - | | |
| **Si-silver** | | | |
| **Description** | **Part number** | **Surface** | **Box quantity** |
| cover cap EB | TKEB0020-L2501_ | lacquered | 1 pc |
| | TKEB0020-L2506_ | lacquered | 100 pcs |
| cover cap FEB rh. | FKFE0011-L2501_ | lacquered | 1 pc |
| | FKFE0011-L2506_ | lacquered | 100 pcs |
| | FKFE0011-L2508_ | lacquered | 500 pcs |
| cover cap FEB lh. | FKFE0012-L2501_ | lacquered | 1 pc |
| | FKFE0012-L2506_ | lacquered | 100 pcs |
| | FKFE0012-L2508_ | lacquered | 500 pcs |
| cover cap FEB rh. | TKFE7011-L2501_ | lacquered | 1 pc |
| | TKFE7011-L2506_ | lacquered | 100 pcs |
| cover cap FEB lh. | TKFE7012-L2501_ | lacquered | 1 pc |
| | TKFE7012-L2506_ | lacquered | 100 pcs |
| cover cap FEB ALU16 rh. | - | | |
| cover cap FEB ALU16 lh. | - | | |
| cover cap EL O MB | TKEO0010-L2501_ | lacquered | 1 pc |
| | TKEO0010-L2506_ | lacquered | 100 pcs |
| cover cap EL U | TKEU0010-L2501_ | lacquered | 1 pc |
| | TKEU0010-L2506_ | lacquered | 100 pcs |
| cover cap W PVC | TKWB0010-L2501_ | lacquered | 1 pc |
| | TKWB0010-L2506_ | lacquered | 100 pcs |
| cover cap S | TKSL0020-L2501_ | lacquered | 1 pc |
| | TKSL0020-L2506_ | lacquered | 100 pcs |
| cover cap S 7 RB | FKSL0030-L2501_ | lacquered | 1 pc |
| | FKSL0030-L2506_ | lacquered | 100 pcs |
| cover cap W RB rh. | FKWB0031-L2501_ | lacquered | 1 pc |
| | FKWB0031-L2506_ | lacquered | 100 pcs |
| cover cap W RB lh. | FKWB0032-L2501_ | lacquered | 1 pc |
| | FKWB0032-L2506_ | lacquered | 100 pcs |
| bag closing cap EB | - | | |
| **Si-mid.bronze** | | | |
| **Description** | **Part number** | **Surface** | **Box quantity** |
| cover cap EB | TKEB0020-03101_ | neutral | 1 pc |
| | TKEB0020-03106_ | neutral | 100 pcs |
| cover cap FEB rh. | FKFE0011-03101_ | neutral | 1 pc |
| | FKFE0011-03106_ | neutral | 100 pcs |
| cover cap FEB lh. | FKFE0012-03101_ | neutral | 1 pc |
| | FKFE0012-03106_ | neutral | 100 pcs |

1.1

## Sales information

| Si-mid.bronze | | | |
|---|---|---|---|
| **Description** | **Part number** | **Surface** | **Box quantity** |
| cover cap FEB rh. | TKFE7011-03101_ | neutral | 1 pc |
| | TKFE7011-03106_ | neutral | 100 pcs |
| cover cap FEB lh. | TKFE7012-03101_ | neutral | 1 pc |
| | TKFE7012-03106_ | neutral | 100 pcs |
| cover cap FEB ALU16 rh. | - | | |
| cover cap FEB ALU16 lh. | - | | |
| cover cap EL O MB | TKEO0010-03101_ | neutral | 1 pc |
| | TKEO0010-03106_ | neutral | 100 pcs |
| cover cap EL U | TKEU0010-03101_ | neutral | 1 pc |
| | TKEU0010-03106_ | neutral | 100 pcs |
| cover cap W PVC | TKWB0010-03101_ | neutral | 1 pc |
| | TKWB0010-03106_ | neutral | 100 pcs |
| cover cap S | TKSL0020-03101_ | neutral | 1 pc |
| | TKSL0020-03106_ | neutral | 100 pcs |
| cover cap S 7 RB | FKSL0030-L3101_ | lacquered | 1 pc |
| | FKSL0030-L3106_ | lacquered | 100 pcs |
| cover cap W RB rh. | FKWB0031-L3101_ | lacquered | 1 pc |
| | FKWB0031-L3106_ | lacquered | 100 pcs |
| cover cap W RB lh. | FKWB0032-L3101_ | lacquered | 1 pc |
| | FKWB0032-L3106_ | lacquered | 100 pcs |
| bag closing cap EB | - | | |
| **titan m. bright** | | | |
| **Description** | **Part number** | **Surface** | **Box quantity** |
| cover cap EB | TKEB0020-L3401_ | lacquered | 1 pc |
| | TKEB0020-L3406_ | lacquered | 100 pcs |
| cover cap FEB rh. | FKFE0011-L3401_ | lacquered | 1 pc |
| | FKFE0011-L3406_ | lacquered | 100 pcs |
| cover cap FEB lh. | FKFE0012-L3401_ | lacquered | 1 pc |
| | FKFE0012-L3406_ | lacquered | 100 pcs |
| cover cap FEB rh. | TKFE7011-L3401_ | lacquered | 1 pc |
| | TKFE7011-L3406_ | lacquered | 100 pcs |
| cover cap FEB lh. | TKFE7012-L3401_ | lacquered | 1 pc |
| | TKFE7012-L3406_ | lacquered | 100 pcs |
| cover cap FEB ALU16 rh. | - | | |
| cover cap FEB ALU16 lh. | - | | |
| cover cap EL O MB | TKEO0010-L3401_ | lacquered | 1 pc |
| | TKEO0010-L3406_ | lacquered | 100 pcs |
| cover cap EL U | TKEU0010-L3401_ | lacquered | 1 pc |
| | TKEU0010-L3406_ | lacquered | 100 pcs |
| cover cap W PVC | TKWB0010-L3401_ | lacquered | 1 pc |
| | TKWB0010-L3406_ | lacquered | 100 pcs |
| cover cap S | TKSL0020-L3401_ | lacquered | 1 pc |
| | TKSL0020-L3406_ | lacquered | 100 pcs |
| cover cap S 7 RB | FKSL0030-L3401_ | lacquered | 1 pc |
| | FKSL0030-L3406_ | lacquered | 100 pcs |
| cover cap W RB rh. | FKWB0031-L3401_ | lacquered | 1 pc |
| | FKWB0031-L3406_ | lacquered | 100 pcs |
| cover cap W RB lh. | FKWB0032-L3401_ | lacquered | 1 pc |
| | FKWB0032-L3406_ | lacquered | 100 pcs |
| bag closing cap EB | - | | |

## Sales information

| gold shining | | | |
|---|---|---|---|
| **Description** | **Part number** | **Surface** | **Box quantity** |
| cover cap EB | TKEB0020-L3801_ | lacquered | 1 pc |
| | TKEB0020-L3806_ | lacquered | 100 pcs |
| cover cap FEB rh. | FKFE0011-L3801_ | lacquered | 1 pc |
| | FKFE0011-L3806_ | lacquered | 100 pcs |
| cover cap FEB lh. | FKFE0012-L3801_ | lacquered | 1 pc |
| | FKFE0012-L3806_ | lacquered | 100 pcs |
| cover cap FEB rh. | TKFE7011-L3801_ | lacquered | 1 pc |
| | TKFE7011-L3806_ | lacquered | 100 pcs |
| cover cap FEB lh. | TKFE7012-L3801_ | lacquered | 1 pc |
| | TKFE7012-L3806_ | lacquered | 100 pcs |
| cover cap FEB ALU16 rh. | TKFE8031-L3801_ | lacquered | 1 pc |
| | TKFE8031-L3806_ | lacquered | 100 pcs |
| cover cap FEB ALU16 lh. | TKFE8032-L3801_ | lacquered | 1 pc |
| | TKFE8032-L3806_ | lacquered | 100 pcs |
| cover cap EL O MB | TKEO0010-L3801_ | lacquered | 1 pc |
| | TKEO0010-L3806_ | lacquered | 100 pcs |
| cover cap EL U | TKEU0010-L3801_ | lacquered | 1 pc |
| | TKEU0010-L3806_ | lacquered | 100 pcs |
| cover cap W PVC | TKWB0010-L3801_ | lacquered | 1 pc |
| | TKWB0010-L3806_ | lacquered | 100 pcs |
| cover cap S | TKSL0020-L3801_ | lacquered | 1 pc |
| | TKSL0020-L3806_ | lacquered | 100 pcs |
| cover cap S 7 RB | FKSL0030-L3801_ | lacquered | 1 pc |
| | FKSL0030-L3806_ | lacquered | 100 pcs |
| cover cap W RB rh. | FKWB0031-L3801_ | lacquered | 1 pc |
| | FKWB0031-L3806_ | lacquered | 100 pcs |
| cover cap W RB lh. | FKWB0032-L3801_ | lacquered | 1 pc |
| | FKWB0032-L3806_ | lacquered | 100 pcs |
| bag closing cap EB | - | | |
| **RAL1015** | | | |
| **Description** | **Part number** | **Surface** | **Box quantity** |
| cover cap EB | TKEB0020-0A401_ | neutral | 1 pc |
| | TKEB0020-0A406_ | neutral | 100 pcs |
| cover cap FEB rh. | - | | |
| cover cap FEB lh. | - | | |
| cover cap FEB rh. | TKFE7011-0A401_ | neutral | 1 pc |
| | TKFE7011-0A406_ | neutral | 100 pcs |
| cover cap FEB lh. | TKFE7012-0A401_ | neutral | 1 pc |
| | TKFE7012-0A406_ | neutral | 100 pcs |
| cover cap FEB ALU16 rh. | - | | |
| cover cap FEB ALU16 lh. | - | | |
| cover cap EL O MB | TKEO0010-0A401_ | neutral | 1 pc |
| | TKEO0010-0A406_ | neutral | 100 pcs |
| cover cap EL U | TKEU0010-0A401_ | neutral | 1 pc |
| | TKEU0010-0A406_ | neutral | 100 pcs |
| cover cap W PVC | TKWB0010-0A401_ | neutral | 1 pc |
| | TKWB0010-0A406_ | neutral | 100 pcs |
| cover cap S | TKSL0020-0A401_ | neutral | 1 pc |
| | TKSL0020-0A406_ | neutral | 100 pcs |
| cover cap S 7 RB | - | | |

1.1

## Sales information

| RAL1015 | | | |
|---|---|---|---|
| **Description** | **Part number** | **Surface** | **Box quantity** |
| cover cap W RB rh. | - | | |
| cover cap W RB lh. | - | | |
| bag closing cap EB | - | | |
| **RAL8003** | | | |
| **Description** | **Part number** | **Surface** | **Box quantity** |
| cover cap EB | TKEB0020-0E901_ | neutral | 1 pc |
| | TKEB0020-0E906_ | neutral | 100 pcs |
| cover cap FEB rh. | FKFE0011-0E901_ | neutral | 1 pc |
| | FKFE0011-0E906_ | neutral | 100 pcs |
| cover cap FEB lh. | FKFE0012-0E901_ | neutral | 1 pc |
| | FKFE0012-0E906_ | neutral | 100 pcs |
| cover cap FEB rh. | - | | |
| cover cap FEB lh. | - | | |
| cover cap FEB ALU16 rh. | - | | |
| cover cap FEB ALU16 lh. | - | | |
| cover cap EL O MB | TKEO0010-0E901_ | neutral | 1 pc |
| | TKEO0010-0E906_ | neutral | 100 pcs |
| cover cap EL U | TKEU0010-0E901_ | neutral | 1 pc |
| | TKEU0010-0E906_ | neutral | 100 pcs |
| cover cap W PVC | TKWB0010-0E901_ | neutral | 1 pc |
| | TKWB0010-0E906_ | neutral | 100 pcs |
| cover cap S | TKSL0020-0E901_ | neutral | 1 pc |
| | TKSL0020-0E906_ | neutral | 100 pcs |
| cover cap S 7 RB | - | | |
| cover cap W RB rh. | FKWB0031-0E901_ | neutral | 1 pc |
| cover cap W RB lh. | FKWB0032-0E901_ | neutral | 1 pc |
| bag closing cap EB | - | | |
| **SI-old gold** | | | |
| **Description** | **Part number** | **Surface** | **Box quantity** |
| cover cap EB | TKEB0020-LH001_ | lacquered | 1 pc |
| | TKEB0020-LH006_ | lacquered | 100 pcs |
| cover cap FEB rh. | FKFE0011-0H001_ | neutral | 1 pc |
| | FKFE0011-0H006_ | neutral | 100 pcs |
| cover cap FEB lh. | FKFE0012-0H001_ | neutral | 1 pc |
| | FKFE0012-0H006_ | neutral | 100 pcs |
| cover cap FEB rh. | TKFE7011-0H001_ | neutral | 1 pc |
| | TKFE7011-0H006_ | neutral | 100 pcs |
| cover cap FEB lh. | TKFE7012-0H001_ | neutral | 1 pc |
| | TKFE7012-0H006_ | neutral | 100 pcs |
| cover cap FEB ALU16 rh. | - | | |
| cover cap FEB ALU16 lh. | - | | |
| cover cap EL O MB | TKEO0010-0H001_ | neutral | 1 pc |
| | TKEO0010-0H006_ | neutral | 100 pcs |
| cover cap EL U | TKEU0010-0H001_ | neutral | 1 pc |
| | TKEU0010-0H006_ | neutral | 100 pcs |
| cover cap W PVC | TKWB0010-0H001_ | neutral | 1 pc |
| | TKWB0010-0H006_ | neutral | 100 pcs |
| cover cap S | TKSL0020-0H001_ | neutral | 1 pc |
| | TKSL0020-0H006_ | neutral | 100 pcs |

## Sales information

| Description | Part number | Surface | Box quantity |
|---|---|---|---|
| **SI-old gold** | | | |
| cover cap S 7 RB | FKSL0030-0H001_ | neutral | 1 pc |
| | FKSL0030-0H006_ | neutral | 100 pcs |
| cover cap W RB rh. | FKWB0031-0H001_ | neutral | 1 pc |
| | FKWB0031-0H006_ | neutral | 100 pcs |
| | FKWB0031-LH001_ | lacquered | 1 pc |
| | FKWB0031-LH006_ | lacquered | 100 pcs |
| cover cap W RB lh. | FKWB0032-0H001_ | neutral | 1 pc |
| | FKWB0032-0H006_ | neutral | 100 pcs |
| | FKWB0032-LH001_ | lacquered | 1 pc |
| | FKWB0032-LH006_ | lacquered | 100 pcs |
| bag closing cap EB | - | | |
| **F9 titan m. dark** | | | |
| **Description** | **Part number** | **Surface** | **Box quantity** |
| cover cap EB | TKEB0020-LH401_ | lacquered | 1 pc |
| | TKEB0020-LH406_ | lacquered | 100 pcs |
| cover cap FEB rh. | FKFE0011-LH401_ | lacquered | 1 pc |
| | FKFE0011-LH408_ | lacquered | 500 pcs |
| cover cap FEB lh. | FKFE0012-LH401_ | lacquered | 1 pc |
| | FKFE0012-LH408_ | lacquered | 500 pcs |
| cover cap FEB rh. | TKFE7011-LH401_ | lacquered | 1 pc |
| | TKFE7011-LH406_ | lacquered | 100 pcs |
| cover cap FEB lh. | TKFE7012-LH401_ | lacquered | 1 pc |
| | TKFE7012-LH406_ | lacquered | 100 pcs |
| cover cap FEB ALU16 rh. | TKFE8031-LH401_ | lacquered | 1 pc |
| | TKFE8031-LH406_ | lacquered | 100 pcs |
| cover cap FEB ALU16 lh. | TKFE8032-LH401_ | lacquered | 1 pc |
| | TKFE8032-LH406_ | lacquered | 100 pcs |
| cover cap EL O MB | TKEO0010-LH401_ | lacquered | 1 pc |
| | TKEO0010-LH406_ | lacquered | 100 pcs |
| cover cap EL U | TKEU0010-LH401_ | lacquered | 1 pc |
| | TKEU0010-LH406_ | lacquered | 100 pcs |
| cover cap W PVC | TKWB0010-LH401_ | lacquered | 1 pc |
| | TKWB0010-LH406_ | lacquered | 100 pcs |
| cover cap S | TKSL0020-LH401_ | lacquered | 1 pc |
| | TKSL0020-LH406_ | lacquered | 100 pcs |
| cover cap S 7 RB | FKSL0030-LH401_ | lacquered | 1 pc |
| | FKSL0030-LH406_ | lacquered | 100 pcs |
| cover cap W RB rh. | FKWB0031-LH401_ | lacquered | 1 pc |
| | FKWB0031-LH406_ | lacquered | 100 pcs |
| cover cap W RB lh. | FKWB0032-LH401_ | lacquered | 1 pc |
| | FKWB0032-LH406_ | lacquered | 100 pcs |
| bag closing cap EB | TKEB0030-LH401_ | lacquered | 1 pc |
| | TKEB0030-LH408_ | lacquered | 500 pcs |
| **Si-white-alu** | | | |
| **Description** | **Part number** | **Surface** | **Box quantity** |
| cover cap EB | TKEB0020-0M201_ | neutral | 1 pc |
| | TKEB0020-0M206_ | neutral | 100 pcs |
| cover cap FEB rh. | FKFE0011-0M201_ | neutral | 1 pc |
| | FKFE0011-0M206_ | neutral | 100 pcs |

## Sales information

| Si-white-alu | | | |
|---|---|---|---|
| **Description** | **Part number** | **Surface** | **Box quantity** |
| cover cap FEB lh. | FKFE0012-0M201_ | neutral | 1 pc |
| | FKFE0012-0M206_ | neutral | 100 pcs |
| cover cap FEB rh. | TKFE7011-0M201_ | neutral | 1 pc |
| | TKFE7011-0M206_ | neutral | 100 pcs |
| cover cap FEB lh. | TKFE7012-0M201_ | neutral | 1 pc |
| | TKFE7012-0M206_ | neutral | 100 pcs |
| cover cap FEB ALU16 rh. | - | | |
| cover cap FEB ALU16 lh. | - | | |
| cover cap EL O MB | TKEO0010-0M201_ | neutral | 1 pc |
| | TKEO0010-0M206_ | neutral | 100 pcs |
| cover cap EL U | TKEU0010-0M201_ | neutral | 1 pc |
| | TKEU0010-0M206_ | neutral | 100 pcs |
| cover cap W PVC | TKWB0010-0M201_ | neutral | 1 pc |
| | TKWB0010-0M206_ | neutral | 100 pcs |
| cover cap S | TKSL0020-0M201_ | neutral | 1 pc |
| | TKSL0020-0M206_ | neutral | 100 pcs |
| cover cap S 7 RB | - | | |
| cover cap W RB rh. | - | | |
| cover cap W RB lh. | - | | |
| bag closing cap EB | - | | |
| **special colour** | | | |
| **Description** | **Part number** | **Surface** | **Box quantity** |
| cover cap EB | TKEB0020-LV001_ | lacquered | 1 pc |
| cover cap FEB rh. | FKFE0011-LV001_ | lacquered | 1 pc |
| cover cap FEB lh. | FKFE0012-LV001_ | lacquered | 1 pc |
| cover cap FEB rh. | TKFE7011-LV001_ | lacquered | 1 pc |
| cover cap FEB lh. | TKFE7012-LV001_ | lacquered | 1 pc |
| cover cap FEB ALU16 rh. | TKFE8031-LV001_ | lacquered | 1 pc |
| cover cap FEB ALU16 lh. | TKFE8032-LV001_ | lacquered | 1 pc |
| cover cap EL O MB | TKEO0010-LV001_ | lacquered | 1 pc |
| cover cap EL U | TKEU0010-LV001_ | lacquered | 1 pc |
| cover cap W PVC | TKWB0010-LV001_ | lacquered | 1 pc |
| cover cap S | TKSL0020-LV001_ | lacquered | 1 pc |
| cover cap S 7 RB | - | | |
| cover cap W RB rh. | FKWB0031-LV001_ | lacquered | 1 pc |
| cover cap W RB lh. | FKWB0032-LV001_ | lacquered | 1 pc |
| bag closing cap EB | - | | |

| Description | Material | Page |
|---|---|---|
| window frame clearance | | 1.2 - 3 |
| rebate corner hinge H | TBFE8401, TBFE8402, TBFE8411, TBFE8412, TBFE8431, TBFE8432, TBFE8441, TBFE8442, TKFE7011, TKFE7012 | 1.2 - 4 |
| rebate corner hinge ON H | TBFE8101, TBFE8102, TBFE8111, TBFE8112, TKFE7011, TKFE7012 | 1.2 - 6 |
| reb. corner hinge H A0245 ON | TBFE8151, TBFE8152, TKFE7011, TKFE7012 | 1.2 - 8 |
| rebate corner hinge H 16/2 | TBFE8241, TBFE8242, TBFE8201, TBFE8202, TBFE8221, TBFE8222, TBFE8211, TBFE8212, TBFE8231, TBFE8232, TKFE7011, TKFE7012 | 1.2 - 9 |
| rebate cor. hinge H A0245 16/2 | TBFE8301, TBFE8302, TBFE8321, TBFE8322, TBFE8311, TBFE8312, TBFE8331, TBFE8332, TKFE7011, TKFE7012 | 1.2 - 11 |
| bottom hinge H | TBEL8201, TBEL8202, TBEL8101, TBEL8102, TBEL8111, TBEL8112, TKEO0010, TKEU0010 | 1.2 - 13 |
| stay hinge H.. | TBWB8140, TBWB8100, TBWB8120, TBWB8110, TBWB8130, TKWB7010 | 1.2 - 15 |
| stay hinge SF timber | TBWS8200, TBWS8210, TBWS8230, TKWB7010 | 1.2 - 17 |
| top hinge H.. | TBSL8200, TBSL8100, TBSL8110, TBSB6020, TKSL0020 | 1.2 - 18 |
| top hinge RB DT30 H | TMBS8400, TMBS8410, FKSL0030, FKWB0031, FKWB0032 | 1.2 - 20 |
| sash hinge H.. | TBFB8100, TBFB8110, TBFB8130, TKWB7010 | 1.2 - 23 |
| tilt sash hinge H.. | TBKF8100, TBKF8120, TBKF8110, TBKF8130, TBKF8140, TKWB7010 | 1.2 - 24 |
| turn only hinge RB timber | TBDF0100, TBDF0110, TBDF0120, TBDF0130, TKWB0010 | 1.2 - 26 |
| turn only hinge RB H | FBDF0040, FBDF0050, FBDF0010 | 1.2 - 27 |
| turn only hinge timber | TBDF6010, TKWB0010, TKDF0010 | 1.2 - 28 |
| pivot hinge H | FBEL0400, FBEL0410, FBFB0041, FBFB0042, FBFB0051, FBFB0052, FKDZ0010 | 1.2 - 30 |

| Description | Material | Page |
|---|---|---|
| security plate | ZSFP0010, ZSFP0020 | 1.2 - 34 |
| cover caps TITAN H | TKFE7011, TKFE7012, TKEO0010, TKEU0010, TKWB7010, TKSL0020 | 1.2 - 35 |

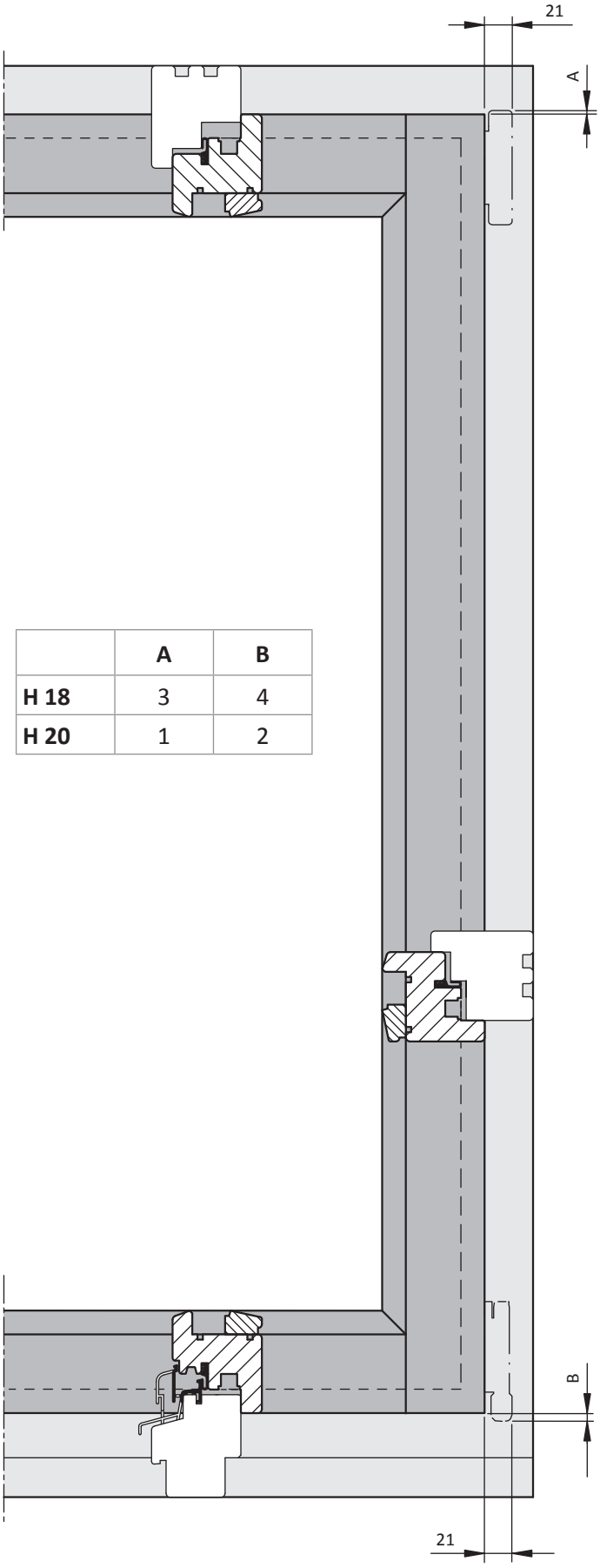


| | A | B |
|---|---|---|
| **H 18** | 3 | 4 |
| **H 20** | 1 | 2 |

## Technical information

| Part number | Description | Airgap | rebate width | Groove axis | sash weight | |
|---|---|---|---|---|---|---|
| TBFE8401-... | rebate corner hinge timber 18-9 rh. | 12/4 | 18 | 9 | 150 kg | 7 |
| TBFE8402-... | rebate corner hinge timber 18-9 lh. | 12/4 | 18 | 9 | 150 kg | 7 |
| TBFE8411-... | rebate corner hinge timber 18-13 rh. | 12/4 | 18 | 13 | 150 kg | 7 |
| TBFE8412-... | rebate corner hinge timber 18-13 lh. | 12/4 | 18 | 13 | 150 kg | 7 |
| TBFE8431-... | rebate corner hinge timber 20-13 rh. | 12/4 | 20 | 13 | 150 kg | 7 |
| TBFE8432-... | rebate corner hinge timber 20-13 lh. | 12/4 | 20 | 13 | 150 kg | 7 |
| TBFE8441-... | rebate corner hinge timber 4/15-9 rh. | 4 | 15 | 9 | 150 kg | 7 |
| TBFE8442-... | rebate corner hinge timber 4/15-9 lh. | 4 | 15 | 9 | 150 kg | 7 |
| TKFE7011-... | cover cap FEB rh. | - | - | - | - | - |
| TKFE7012-... | cover cap FEB lh. | - | - | - | - | - |

- When assembling the rebate corner hinges TITAN, the rebate height must be min. 15 mm
- For alternative colours of cover caps, see ‘Cover Caps’ page

- **Please observe:**
  Guidelines/notes on the product and on liability (VHBH directive as well as the other applicable documents listed - directive can be downloaded at www.beschlagindustrie.de/ggsb/richtlinien.asp )
  Specifications from the profile manufacturers/system owners (PVC, light metal) or DIN 68 121 “Wooden profiles for windows and portal doors”

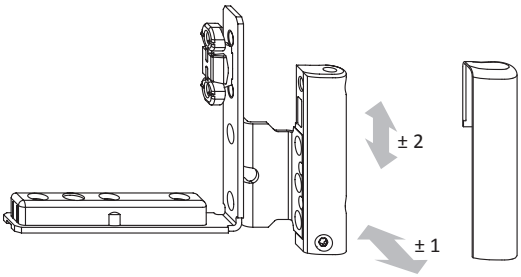


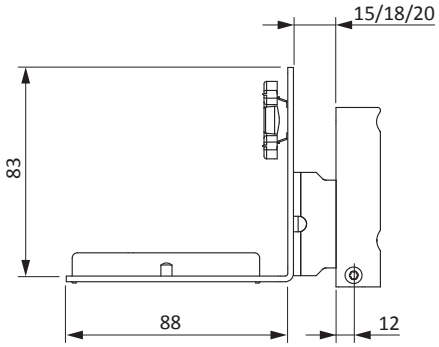

## Sales information

| Description | Part number | Surface | Colour | Box quantity |
|---|---|---|---|---|
| rebate corner hinge timber 18-9 rh. | TBFE8401-10001_ | Titan Silver | without | 1 pc |
| | TBFE8401-10005_ | Titan Silver | without | 50 pcs |
| | TBFE8401-10401_ | Titan Silver | RAL9016 | 1 pc |
| | TBFE8401-10405_ | Titan Silver | RAL9016 | 50 pcs |
| | TBFE8401-1H401_ | Titan Silver | F9 titan m dark | 1 pc |
| | TBFE8401-1H405_ | Titan Silver | F9 titan m dark | 50 pcs |
| rebate corner hinge timber 18-9 lh. | TBFE8402-10001_ | Titan Silver | without | 1 pc |
| | TBFE8402-10005_ | Titan Silver | without | 50 pcs |
| | TBFE8402-10401_ | Titan Silver | RAL9016 | 1 pc |
| | TBFE8402-10405_ | Titan Silver | RAL9016 | 50 pcs |
| | TBFE8402-1H401_ | Titan Silver | F9 titan m dark | 1 pc |
| | TBFE8402-1H405_ | Titan Silver | F9 titan m dark | 50 pcs |
| rebate corner hinge timber 18-13 rh. | TBFE8411-10001_ | Titan Silver | without | 1 pc |
| | TBFE8411-10005_ | Titan Silver | without | 50 pcs |
| | TBFE8411-10401_ | Titan Silver | RAL9016 | 1 pc |
| | TBFE8411-10405_ | Titan Silver | RAL9016 | 50 pcs |
| | TBFE8411-1H401_ | Titan Silver | F9 titan m dark | 1 pc |
| | TBFE8411-1H405_ | Titan Silver | F9 titan m dark | 50 pcs |
| rebate corner hinge timber 18-13 lh. | TBFE8412-10001_ | Titan Silver | without | 1 pc |
| | TBFE8412-10005_ | Titan Silver | without | 50 pcs |
| | TBFE8412-10405_ | Titan Silver | RAL9016 | 50 pcs |
| | TBFE8412-10401_ | Titan Silver | RAL9016 | 50 pcs |
| | TBFE8412-1H401_ | Titan Silver | F9 titan m dark | 1 pc |
| | TBFE8412-1H405_ | Titan Silver | F9 titan m dark | 50 pcs |
| rebate corner hinge timber 20-13 rh. | TBFE8431-10001_ | Titan Silver | without | 1 pc |
| | TBFE8431-10005_ | Titan Silver | without | 50 pcs |
| rebate corner hinge timber 20-13 lh. | TBFE8432-10001_ | Titan Silver | without | 1 pc |
| | TBFE8432-10005_ | Titan Silver | without | 50 pcs |
| rebate corner hinge timber 4/15-9 rh. | TBFE8441-10001_ | Titan Silver | without | 1 pc |
| | TBFE8441-10005_ | Titan Silver | without | 50 pcs |
| | TBFE8441-10405_ | Titan Silver | RAL9016 | 50 pcs |
| rebate corner hinge timber 4/15-9 lh. | TBFE8442-10001_ | Titan Silver | without | 1 pc |
| | TBFE8442-10005_ | Titan Silver | without | 50 pcs |
| | TBFE8442-10405_ | Titan Silver | RAL9016 | 50 pcs |
| cover cap FEB rh. | TKFE7011-00401_ | neutral | RAL9016 | 1 pc |
| | TKFE7011-00406_ | neutral | RAL9016 | 100 pcs |
| | TKFE7011-00408_ | neutral | RAL9016 | 500 pcs |
| cover cap FEB lh. | TKFE7012-00401_ | neutral | RAL9016 | 1 pc |
| | TKFE7012-00406_ | neutral | RAL9016 | 100 pcs |
| | TKFE7012-00408_ | neutral | RAL9016 | 500 pcs |

1.2

## Technical information

| Part number | Description | Airgap | rebate width | sash weight | |
|---|---|---|---|---|---|
| TBFE8101-... | reb. corn. hinge ON H 18-.. rh. | 12/4 | 18 | 150 kg | 7 |
| TBFE8102-... | reb. corn. hinge ON H 18-.. lh. | 12/4 | 18 | 150 kg | 7 |
| TBFE8111-... | reb. corn. hinge ON H 20-.. rh. | 12/4 | 20 | 150 kg | 7 |
| TBFE8112-... | reb. corn. hinge ON H 20-.. lh. | 12/4 | 20 | 150 kg | 7 |
| TKFE7011-... | cover cap FEB rh. | - | - | - | - |
| TKFE7012-... | cover cap FEB lh. | - | - | - | - |

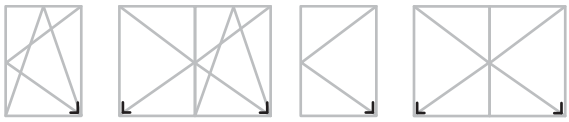

- When assembling the rebate corner hinges TITAN, the rebate height must be min. 15 mm
- For alternative colours of cover caps, see ‘Cover Caps’ page

- **Please observe:**
  Guidelines/notes on the product and on liability (VHBH directive as well as the other applicable documents listed - directive can be downloaded at www.beschlagindustrie.de/ggsb/richtlinien.asp )
  Specifications from the profile manufacturers/system owners (PVC, light metal) or DIN 68 121 “Wooden profiles for windows and portal doors”

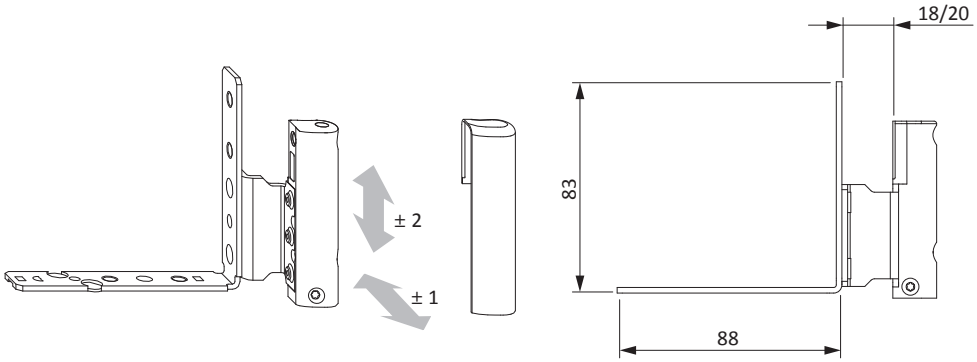

## Sales information

| Description | Part number | Surface | Colour | Box quantity |
|---|---|---|---|---|
| reb. corn. hinge ON H 18-.. rh. | TBFE8101-10001_ | Titan Silver | without | 1 pc |
| | TBFE8101-10005_ | Titan Silver | without | 50 pcs |
| | TBFE8101-10401_ | Titan Silver | RAL9016 | 1 pc |
| | TBFE8101-10405_ | Titan Silver | RAL9016 | 50 pcs |
| reb. corn. hinge ON H 18-.. lh. | TBFE8102-10001_ | Titan Silver | without | 1 pc |
| | TBFE8102-10005_ | Titan Silver | without | 50 pcs |
| | TBFE8102-10401_ | Titan Silver | RAL9016 | 1 pc |
| | TBFE8102-10405_ | Titan Silver | RAL9016 | 50 pcs |
| reb. corn. hinge ON H 20-.. rh. | TBFE8111-10001_ | Titan Silver | without | 1 pc |
| | TBFE8111-10005_ | Titan Silver | without | 50 pcs |
| | TBFE8111-10401_ | Titan Silver | RAL9016 | 1 pc |
| | TBFE8111-10405_ | Titan Silver | RAL9016 | 50 pcs |
| reb. corn. hinge ON H 20-.. lh. | TBFE8112-10001_ | Titan Silver | without | 1 pc |
| | TBFE8112-10005_ | Titan Silver | without | 50 pcs |
| | TBFE8112-10401_ | Titan Silver | RAL9016 | 1 pc |
| | TBFE8112-10405_ | Titan Silver | RAL9016 | 50 pcs |
| cover cap FEB rh. | TKFE7011-00401_ | neutral | RAL9016 | 1 pc |
| | TKFE7011-00406_ | neutral | RAL9016 | 100 pcs |
| | TKFE7011-00408_ | neutral | RAL9016 | 500 pcs |
| cover cap FEB lh. | TKFE7012-00401_ | neutral | RAL9016 | 1 pc |
| | TKFE7012-00406_ | neutral | RAL9016 | 100 pcs |
| | TKFE7012-00408_ | neutral | RAL9016 | 500 pcs |

1.2

## Technical information

| Part number | Description | Airgap | rebate width | sash weight | |
|---|---|---|---|---|---|
| TBFE8151-... | reb. corn. hinge ON H 18-.. A0245 rh. | 12/4 | 18 | 150 kg | 7 |
| TBFE8152-... | reb. corn. hinge ON H 18-.. A0245 lh. | 12/4 | 18 | 150 kg | 7 |
| TKFE7011-... | cover cap FEB rh. | - | - | - | - |
| TKFE7012-... | cover cap FEB lh. | - | - | - | - |

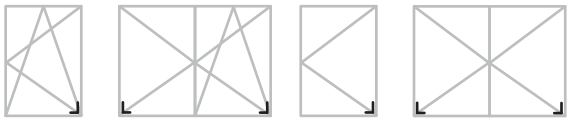

- Suitable for use with threshold
- Hinge knuckle set 20 mm higher
- When assembling the rebate corner hinges TITAN, the rebate height must be min. 15 mm
- For alternative colours of cover caps, see ‘Cover Caps’ page

- **Please observe:**
  Guidelines/notes on the product and on liability (VHBH directive as well as the other applicable documents listed - directive can be downloaded at www.beschlagindustrie.de/ggsb/richtlinien.asp )
  Specifications from the profile manufacturers/system owners (PVC, light metal) or DIN 68 121 “Wooden profiles for windows and portal doors”

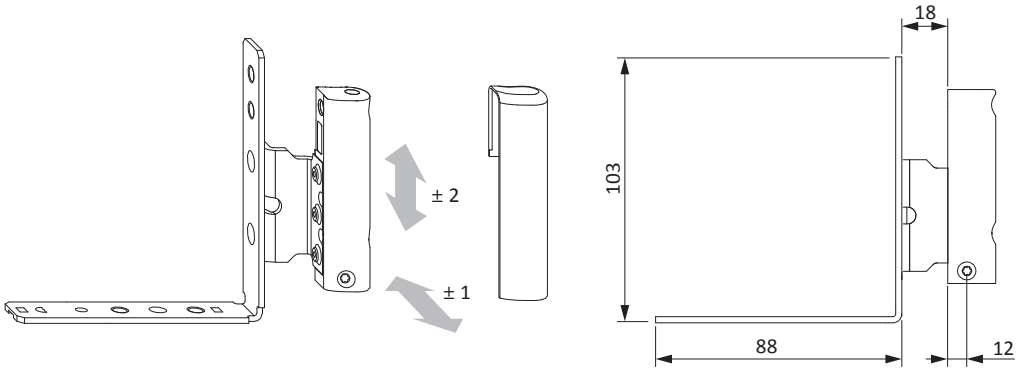


## Sales information

| Description | Part number | Surface | Colour | Box quantity |
|---|---|---|---|---|
| reb. corn. hinge ON H 18-.. A0245 rh. | TBFE8151-10001_ | Titan Silver | without | 1 pc |
| | TBFE8151-10005_ | Titan Silver | without | 50 pcs |
| reb. corn. hinge ON H 18-.. A0245 lh. | TBFE8152-10001_ | Titan Silver | without | 1 pc |
| | TBFE8152-10005_ | Titan Silver | without | 50 pcs |
| cover cap FEB rh. | TKFE7011-00401_ | neutral | RAL9016 | 1 pc |
| | TKFE7011-00406_ | neutral | RAL9016 | 100 pcs |
| | TKFE7011-00408_ | neutral | RAL9016 | 500 pcs |
| cover cap FEB lh. | TKFE7012-00401_ | neutral | RAL9016 | 1 pc |
| | TKFE7012-00406_ | neutral | RAL9016 | 100 pcs |
| | TKFE7012-00408_ | neutral | RAL9016 | 500 pcs |

## Technical information

| Part number | Description | Airgap | rebate width | Groove axis | sash weight | |
|---|---|---|---|---|---|---|
| TBFE8241-... | reb. corn. hinge 16/2 H 4/15-9 rh. | 4 | 15 | 9 | 150 kg | 7 |
| TBFE8242-... | reb. corn. hinge 16/2 H 4/15-9 lh. | 4 | 15 | 9 | 150 kg | 7 |
| TBFE8201-... | reb. corn. hinge 16/2 H 18-9 rh. | 12/4 | 18 | 9 | 150 kg | 7 |
| TBFE8202-... | reb. corn. hinge 16/2 H 18-9 lh. | 12/4 | 18 | 9 | 150 kg | 7 |
| TBFE8221-... | reb. corn. hinge 16/2 H 20-9 rh. | 12/4 | 20 | 9 | 150 kg | 7 |
| TBFE8222-... | reb. corn. hinge 16/2 H 20-9 lh. | 12/4 | 20 | 9 | 150 kg | 7 |
| TBFE8211-... | reb. corn. hinge 16/2 H 18-13 rh. | 12/4 | 18 | 13 | 150 kg | 7 |
| TBFE8212-... | reb. corn. hinge 16/2 H 18-13 lh. | 12/4 | 18 | 13 | 150 kg | 7 |
| TBFE8231-... | reb. corn. hinge 16/2 H 20-13 rh. | 12/4 | 20 | 13 | 150 kg | 7 |
| TBFE8232-... | reb. corn. hinge 16/2 H 20-13 lh. | 12/4 | 20 | 13 | 150 kg | 7 |
| TKFE7011-... | cover cap FEB rh. | - | - | - | - | - |
| TKFE7012-... | cover cap FEB lh. | - | - | - | - | - |

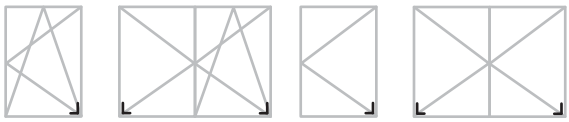

- For fitting groove 16 x 2 mm
- When assembling the rebate corner hinges TITAN, the rebate height must be min. 15 mm
- For alternative colours of cover caps, see ‘Cover Caps’ page

- **Please observe:**
  Guidelines/notes on the product and on liability (VHBH directive as well as the other applicable documents listed - directive can be downloaded at www.beschlagindustrie.de/ggsb/richtlinien.asp )
  Specifications from the profile manufacturers/system owners (PVC, light metal) or DIN 68 121 “Wooden profiles for windows and portal doors”

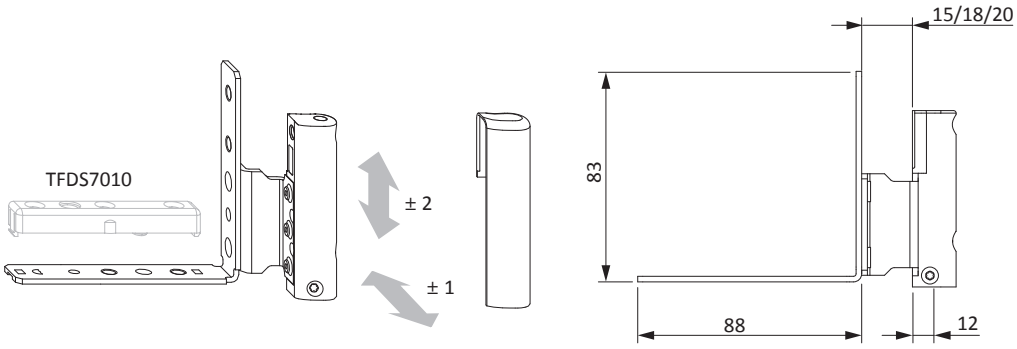

## Sales information

| Description | Part number | Surface | Colour | Box quantity |
|---|---|---|---|---|
| reb. corn. hinge 16/2 H 4/15-9 rh. | TBFE8241-10001_ | Titan Silver | without | 1 pc |
| | TBFE8241-10005_ | Titan Silver | without | 50 pcs |
| | TBFE8241-10401_ | Titan Silver | RAL9016 | 1 pc |
| | TBFE8241-10405_ | Titan Silver | RAL9016 | 50 pcs |
| reb. corn. hinge 16/2 H 4/15-9 lh. | TBFE8242-10001_ | Titan Silver | without | 1 pc |
| | TBFE8242-10005_ | Titan Silver | without | 50 pcs |
| | TBFE8242-10401_ | Titan Silver | RAL9016 | 1 pc |
| | TBFE8242-10405_ | Titan Silver | RAL9016 | 50 pcs |
| reb. corn. hinge 16/2 H 18-9 rh. | TBFE8201-10001_ | Titan Silver | without | 1 pc |
| | TBFE8201-10005_ | Titan Silver | without | 50 pcs |
| | TBFE8201-10401_ | Titan Silver | RAL9016 | 1 pc |
| | TBFE8201-10405_ | Titan Silver | RAL9016 | 50 pcs |
| reb. corn. hinge 16/2 H 18-9 lh. | TBFE8202-10001_ | Titan Silver | without | 1 pc |
| | TBFE8202-10005_ | Titan Silver | without | 50 pcs |
| | TBFE8202-10401_ | Titan Silver | RAL9016 | 1 pc |
| | TBFE8202-10405_ | Titan Silver | RAL9016 | 50 pcs |
| reb. corn. hinge 16/2 H 20-9 rh. | TBFE8221-10001_ | Titan Silver | without | 1 pc |
| | TBFE8221-10005_ | Titan Silver | without | 50 pcs |
| | TBFE8221-10401_ | Titan Silver | RAL9016 | 1 pc |
| | TBFE8221-10405_ | Titan Silver | RAL9016 | 50 pcs |
| reb. corn. hinge 16/2 H 20-9 lh. | TBFE8222-10001_ | Titan Silver | without | 1 pc |
| | TBFE8222-10005_ | Titan Silver | without | 50 pcs |
| | TBFE8222-10401_ | Titan Silver | RAL9016 | 1 pc |
| | TBFE8222-10405_ | Titan Silver | RAL9016 | 50 pcs |
| reb. corn. hinge 16/2 H 18-13 rh. | TBFE8211-10001_ | Titan Silver | without | 1 pc |
| | TBFE8211-10005_ | Titan Silver | without | 50 pcs |
| | TBFE8211-10401_ | Titan Silver | RAL9016 | 1 pc |
| | TBFE8211-10405_ | Titan Silver | RAL9016 | 50 pcs |
| reb. corn. hinge 16/2 H 18-13 lh. | TBFE8212-10001_ | Titan Silver | without | 1 pc |
| | TBFE8212-10005_ | Titan Silver | without | 50 pcs |
| | TBFE8212-10401_ | Titan Silver | RAL9016 | 1 pc |
| | TBFE8212-10405_ | Titan Silver | RAL9016 | 50 pcs |
| reb. corn. hinge 16/2 H 20-13 rh. | TBFE8231-10001_ | Titan Silver | without | 1 pc |
| | TBFE8231-10005_ | Titan Silver | without | 50 pcs |
| | TBFE8231-10401_ | Titan Silver | RAL9016 | 1 pc |
| | TBFE8231-10405_ | Titan Silver | RAL9016 | 50 pcs |
| reb. corn. hinge 16/2 H 20-13 lh. | TBFE8232-10001_ | Titan Silver | without | 1 pc |
| | TBFE8232-10005_ | Titan Silver | without | 50 pcs |
| | TBFE8232-10401_ | Titan Silver | RAL9016 | 1 pc |
| | TBFE8232-10405_ | Titan Silver | RAL9016 | 50 pcs |
| cover cap FEB rh. | TKFE7011-00401_ | neutral | RAL9016 | 1 pc |
| | TKFE7011-00406_ | neutral | RAL9016 | 100 pcs |
| | TKFE7011-00408_ | neutral | RAL9016 | 500 pcs |
| cover cap FEB lh. | TKFE7012-00401_ | neutral | RAL9016 | 1 pc |
| | TKFE7012-00406_ | neutral | RAL9016 | 100 pcs |
| | TKFE7012-00408_ | neutral | RAL9016 | 500 pcs |

## Technical information

| Part number | Description | Airgap | rebate width | Groove axis | sash weight | |
|---|---|---|---|---|---|---|
| TBFE8301-... | reb. corn. hinge 16/2 H 18-9 A0245 rh. | 12/4 | 18 | 9 | 150 kg | 7 |
| TBFE8302-... | reb. corn. hinge 16/2 H 18-9 A0245 lh. | 12/4 | 18 | 9 | 150 kg | 7 |
| TBFE8321-... | reb. corn. hinge 16/2 H 20-9 A0245 rh. | 12/4 | 20 | 9 | 150 kg | 7 |
| TBFE8322-... | reb. corn. hinge 16/2 H 20-9 A0245 lh. | 12/4 | 20 | 9 | 150 kg | 7 |
| TBFE8311-... | reb. corn. hinge 16/2 H 18-13 A0245 rh. | 12/4 | 18 | 13 | 150 kg | 7 |
| TBFE8312-... | reb. corn. hinge 16/2 H 18-13 A0245 lh. | 12/4 | 18 | 13 | 150 kg | 7 |
| TBFE8331-... | reb. corn. hinge 16/2 H 20-13 A0245 rh. | 12/4 | 20 | 13 | 150 kg | 7 |
| TBFE8332-... | reb. corn. hinge 16/2 H 20-13 A0245 lh. | 12/4 | 20 | 13 | 150 kg | 7 |
| TKFE7011-... | cover cap FEB rh. | - | - | - | - | - |
| TKFE7012-... | cover cap FEB lh. | - | - | - | - | - |

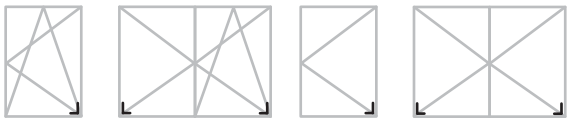

- For fitting groove 16 x 2 mm
- Suitable for use with threshold
- Hinge knuckle set 20 mm higher
- When assembling the rebate corner hinges TITAN, the rebate height must be min. 15 mm
- For alternative colours of cover caps, see ‘Cover Caps’ page

- **Please observe:**
  Guidelines/notes on the product and on liability (VHBH directive as well as the other applicable documents listed - directive can be downloaded at www.beschlagindustrie.de/ggsb/richtlinien.asp )
  Specifications from the profile manufacturers/system owners (PVC, light metal) or DIN 68 121 “Wooden profiles for windows and portal doors”

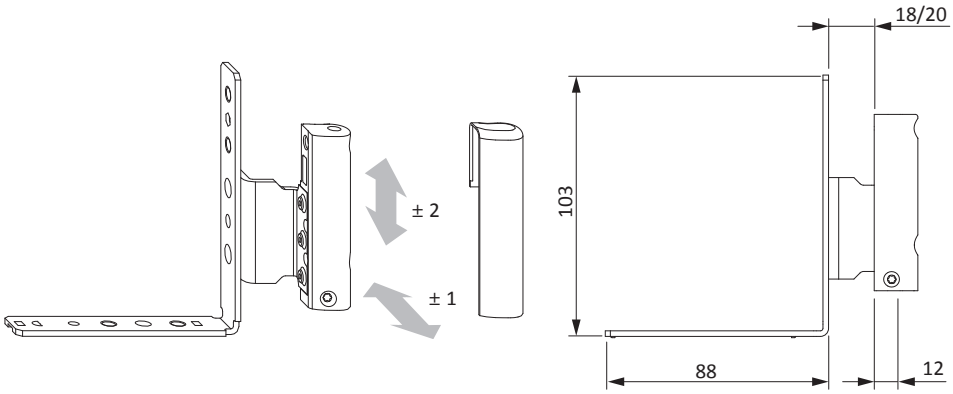

## Sales information



| Description | Part number | Surface | Colour | Box quantity |
|---|---|---|---|---|
| reb. corn. hinge 16/2 H 18-9 A0245 rh. | TBFE8301-10001_ | Titan Silver | without | 1 pc |
| | TBFE8301-10005_ | Titan Silver | without | 50 pcs |
| | TBFE8301-10401_ | Titan Silver | RAL9016 | 1 pc |
| | TBFE8301-10405_ | Titan Silver | RAL9016 | 50 pcs |
| | TBFE8301-1H401_ | Titan Silver | F9 titan m dark | 1 pc |
| | TBFE8301-1H405_ | Titan Silver | F9 titan m dark | 50 pcs |
| reb. corn. hinge 16/2 H 18-9 A0245 lh. | TBFE8302-10001_ | Titan Silver | without | 1 pc |
| | TBFE8302-10005_ | Titan Silver | without | 50 pcs |
| | TBFE8302-10401_ | Titan Silver | RAL9016 | 1 pc |
| | TBFE8302-10405_ | Titan Silver | RAL9016 | 50 pcs |
| | TBFE8302-1H401_ | Titan Silver | F9 titan m dark | 1 pc |
| | TBFE8302-1H405_ | Titan Silver | F9 titan m dark | 50 pcs |
| reb. corn. hinge 16/2 H 20-9 A0245 rh. | TBFE8321-10001_ | Titan Silver | without | 1 pc |
| | TBFE8321-10005_ | Titan Silver | without | 50 pcs |
| | TBFE8321-10401_ | Titan Silver | RAL9016 | 1 pc |
| | TBFE8321-10405_ | Titan Silver | RAL9016 | 50 pcs |
| reb. corn. hinge 16/2 H 20-9 A0245 lh. | TBFE8322-10001_ | Titan Silver | without | 1 pc |
| | TBFE8322-10005_ | Titan Silver | without | 50 pcs |
| | TBFE8322-10401_ | Titan Silver | RAL9016 | 1 pc |
| | TBFE8322-10405_ | Titan Silver | RAL9016 | 50 pcs |
| reb. corn. hinge 16/2 H 18-13 A0245 rh. | TBFE8311-10001_ | Titan Silver | without | 1 pc |
| | TBFE8311-10005_ | Titan Silver | without | 50 pcs |
| | TBFE8311-10401_ | Titan Silver | RAL9016 | 1 pc |
| | TBFE8311-10405_ | Titan Silver | RAL9016 | 50 pcs |
| | TBFE8311-1H401_ | Titan Silver | F9 titan m dark | 1 pc |
| | TBFE8311-1H405_ | Titan Silver | F9 titan m dark | 50 pcs |
| reb. corn. hinge 16/2 H 18-13 A0245 lh. | TBFE8312-10001_ | Titan Silver | without | 1 pc |
| | TBFE8312-10005_ | Titan Silver | without | 50 pcs |
| | TBFE8312-10401_ | Titan Silver | RAL9016 | 1 pc |
| | TBFE8312-10405_ | Titan Silver | RAL9016 | 50 pcs |
| | TBFE8312-1H401_ | Titan Silver | F9 titan m dark | 1 pc |
| | TBFE8312-1H405_ | Titan Silver | F9 titan m dark | 50 pcs |
| reb. corn. hinge 16/2 H 20-13 A0245 rh. | TBFE8331-10001_ | Titan Silver | without | 1 pc |
| | TBFE8331-10005_ | Titan Silver | without | 50 pcs |
| | TBFE8331-10401_ | Titan Silver | RAL9016 | 1 pc |
| | TBFE8331-10405_ | Titan Silver | RAL9016 | 50 pcs |
| reb. corn. hinge 16/2 H 20-13 A0245 lh. | TBFE8332-10001_ | Titan Silver | without | 1 pc |
| | TBFE8332-10005_ | Titan Silver | without | 50 pcs |
| | TBFE8332-10401_ | Titan Silver | RAL9016 | 1 pc |
| | TBFE8332-10405_ | Titan Silver | RAL9016 | 50 pcs |
| cover cap FEB rh. | TKFE7011-00401_ | neutral | RAL9016 | 1 pc |
| | TKFE7011-00406_ | neutral | RAL9016 | 100 pcs |
| | TKFE7011-00408_ | neutral | RAL9016 | 500 pcs |
| cover cap FEB lh. | TKFE7012-00401_ | neutral | RAL9016 | 1 pc |
| | TKFE7012-00406_ | neutral | RAL9016 | 100 pcs |
| | TKFE7012-00408_ | neutral | RAL9016 | 500 pcs |

## Technical information

| Part number | Description | Airgap | rebate width | sash weight | |
|---|---|---|---|---|---|
| TBEL8201-... | bottom hinge timber 4/15-.. rh. | 4 | 15 | 150 kg | 6 |
| TBEL8202-... | bottom hinge timber 4/15-.. lh. | 4 | 15 | 150 kg | 6 |
| TBEL8101-... | bottom hinge H 18-.. rh. | 12/4 | 18 | 150 kg | 6 |
| TBEL8102-... | bottom hinge H 18-.. lh. | 12/4 | 18 | 150 kg | 6 |
| TBEL8111-... | bottom hinge H 20-.. rh. | 12/4 | 20 | 150 kg | 6 |
| TBEL8112-... | bottom hinge H 20-.. lh. | 12/4 | 20 | 150 kg | 6 |
| TKEO0010-... | cover cap EL O MB | - | - | - | - |
| TKEU0010-... | cover cap EL U | - | - | - | - |

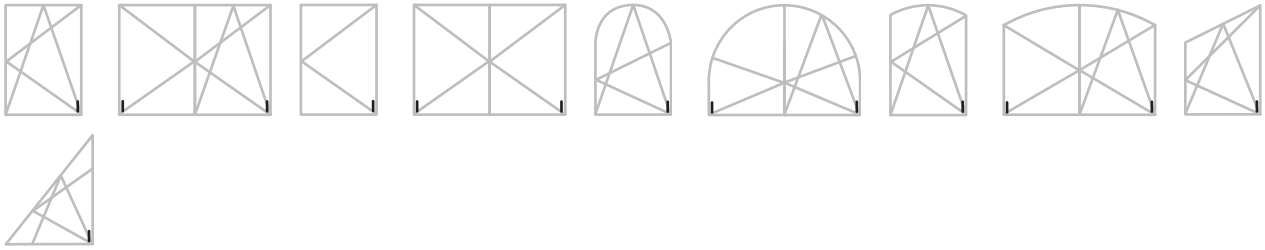

- The ZBDI0010 seal is self-adhesive and can be stuck on the bottom and top hinge in the double well area.
- For alternative colours of cover caps, see ‘Cover Caps’ page

- **Please observe:**
  Guidelines/notes on the product and on liability (VHBH directive as well as the other applicable documents listed - directive can be downloaded at www.beschlagindustrie.de/ggsb/richtlinien.asp )
  Specifications from the profile manufacturers/system owners (PVC, light metal) or DIN 68 121 “Wooden profiles for windows and portal doors”

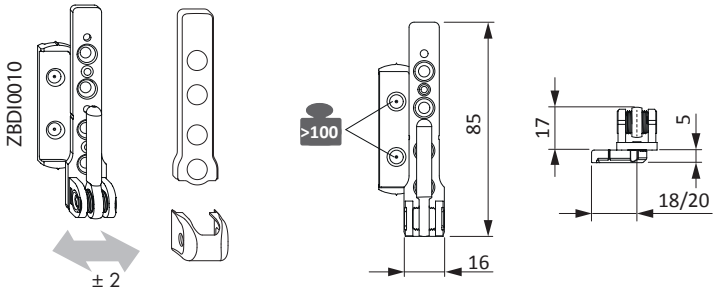


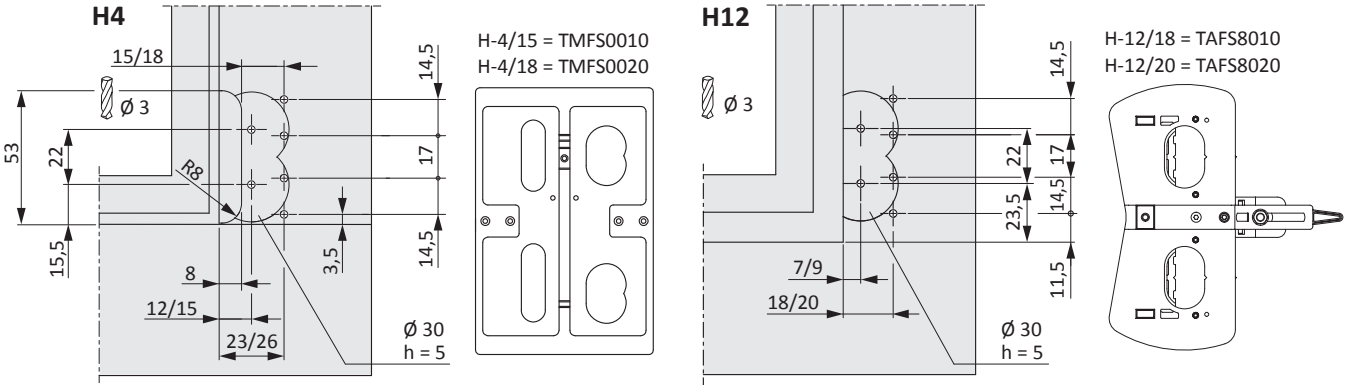

## Sales information

| Description | Part number | Surface | Colour | Box quantity |
|---|---|---|---|---|
| bottom hinge timber 4/15-.. rh. | TBEL8201-10001_ | Titan Silver | without | 1 pc |
| | TBEL8201-10005_ | Titan Silver | without | 50 pcs |
| | TBEL8201-10405_ | Titan Silver | RAL9016 | 50 pcs |
| bottom hinge timber 4/15-.. lh. | TBEL8202-10001_ | Titan Silver | without | 1 pc |
| | TBEL8202-10005_ | Titan Silver | without | 50 pcs |
| | TBEL8202-10405_ | Titan Silver | RAL9016 | 50 pcs |
| bottom hinge H 18-.. rh. | TBEL8101-10001_ | Titan Silver | without | 1 pc |
| | TBEL8101-10006_ | Titan Silver | without | 100 pcs |
| | TBEL8101-10401_ | Titan Silver | RAL9016 | 1 pc |
| | TBEL8101-10405_ | Titan Silver | RAL9016 | 50 pcs |
| | TBEL8101-1H401_ | Titan Silver | F9 titan m dark | 1 pc |
| | TBEL8101-1H405_ | Titan Silver | F9 titan m dark | 50 pcs |
| bottom hinge H 18-.. lh. | TBEL8102-10001_ | Titan Silver | without | 1 pc |
| | TBEL8102-10006_ | Titan Silver | without | 100 pcs |
| | TBEL8102-10401_ | Titan Silver | RAL9016 | 1 pc |
| | TBEL8102-10405_ | Titan Silver | RAL9016 | 50 pcs |
| | TBEL8102-1H401_ | Titan Silver | F9 titan m dark | 1 pc |
| | TBEL8102-1H405_ | Titan Silver | F9 titan m dark | 50 pcs |
| bottom hinge H 20-.. rh. | TBEL8111-10001_ | Titan Silver | without | 1 pc |
| | TBEL8111-10006_ | Titan Silver | without | 100 pcs |
| | TBEL8111-10401_ | Titan Silver | RAL9016 | 1 pc |
| | TBEL8111-10405_ | Titan Silver | RAL9016 | 50 pcs |
| bottom hinge H 20-.. lh. | TBEL8112-10001_ | Titan Silver | without | 1 pc |
| | TBEL8112-10006_ | Titan Silver | without | 100 pcs |
| | TBEL8112-10401_ | Titan Silver | RAL9016 | 1 pc |
| | TBEL8112-10405_ | Titan Silver | RAL9016 | 50 pcs |
| cover cap EL O MB | TKEO0010-00401_ | neutral | RAL9016 | 1 pc |
| | TKEO0010-00406_ | neutral | RAL9016 | 100 pcs |
| | TKEO0010-00408_ | neutral | RAL9016 | 500 pcs |
| cover cap EL U | TKEU0010-00401_ | neutral | RAL9016 | 1 pc |
| | TKEU0010-00406_ | neutral | RAL9016 | 100 pcs |
| | TKEU0010-00408_ | neutral | RAL9016 | 500 pcs |

## Technical information

| Part number | Description | Airgap | rebate width | Groove axis | sash weight |
|---|---|---|---|---|---|
| TBWB8140-... | stay hinge DH timber 4/15-9 | 4 | 15 | 9 | 150 kg |
| TBWB8100-... | stay hinge DH timber 18-9 | 12/4 | 18 | 9 | 150 kg |
| TBWB8120-... | stay hinge DH timber 20-9 | 12/4 | 20 | 9 | 150 kg |
| TBWB8110-... | stay hinge DH timber 18-13 | 12/4 | 18 | 13 | 150 kg |
| TBWB8130-... | stay hinge DH timber 20-13 | 12/4 | 20 | 13 | 150 kg |
| TKWB7010-... | cover cap W timber | - | - | - | - |

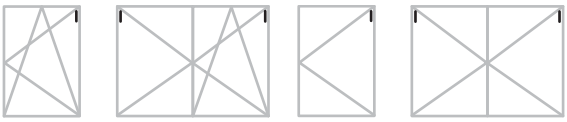

- For alternative colours of cover caps, see ‘Cover Caps’ page

- **Please observe:**
  Guidelines/notes on the product and on liability (VHBH directive as well as the other applicable documents listed - directive can be downloaded at www.beschlagindustrie.de/ggsb/richtlinien.asp )
  Specifications from the profile manufacturers/system owners (PVC, light metal) or DIN 68 121 “Wooden profiles for windows and portal doors”

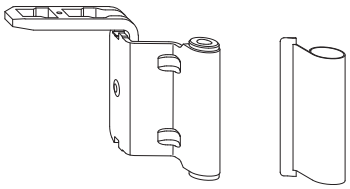

## Sales information

| Description | Part number | Surface | Colour | Box quantity |
|---|---|---|---|---|
| stay hinge DH timber 4/15-9 | TBWB8140-10001_ | Titan Silver | without | 1 pc |
| | TBWB8140-10006_ | Titan Silver | without | 100 pcs |
| | TBWB8140-10405_ | Titan Silver | RAL9016 | 50 pcs |
| | TBWB8140-10401_ | Titan Silver | RAL9016 | 50 pcs |
| stay hinge DH timber 18-9 | TBWB8100-10001_ | Titan Silver | without | 1 pc |
| | TBWB8100-10006_ | Titan Silver | without | 100 pcs |
| | TBWB8100-10401_ | Titan Silver | RAL9016 | 1 pc |
| | TBWB8100-10405_ | Titan Silver | RAL9016 | 50 pcs |
| | TBWB8100-1H401_ | Titan Silver | F9 titan m dark | 1 pc |
| | TBWB8100-1H405_ | Titan Silver | F9 titan m dark | 50 pcs |
| stay hinge DH timber 20-9 | TBWB8120-10001_ | Titan Silver | without | 1 pc |
| | TBWB8120-10006_ | Titan Silver | without | 100 pcs |
| | TBWB8120-10401_ | Titan Silver | RAL9016 | 1 pc |
| | TBWB8120-10405_ | Titan Silver | RAL9016 | 50 pcs |
| stay hinge DH timber 18-13 | TBWB8110-10001_ | Titan Silver | without | 1 pc |
| | TBWB8110-10006_ | Titan Silver | without | 100 pcs |
| | TBWB8110-10401_ | Titan Silver | RAL9016 | 1 pc |
| | TBWB8110-10405_ | Titan Silver | RAL9016 | 50 pcs |
| | TBWB8110-1H401_ | Titan Silver | F9 titan m dark | 1 pc |
| | TBWB8110-1H405_ | Titan Silver | F9 titan m dark | 50 pcs |
| stay hinge DH timber 20-13 | TBWB8130-10001_ | Titan Silver | without | 1 pc |
| | TBWB8130-10006_ | Titan Silver | without | 100 pcs |
| | TBWB8130-10401_ | Titan Silver | RAL9016 | 1 pc |
| | TBWB8130-10405_ | Titan Silver | RAL9016 | 50 pcs |
| cover cap W timber | TKWB7010-00401_ | neutral | RAL9016 | 1 pc |
| | TKWB7010-00406_ | neutral | RAL9016 | 100 pcs |
| | TKWB7010-00408_ | neutral | RAL9016 | 500 pcs |

## Technical information

| Part number | Description | Airgap | rebate width | Groove axis | sash weight |
|---|---|---|---|---|---|
| TBWS8200-... | stay hinge SF DH timber 18-9 | 12/4 | 18 | 9 | 80 kg |
| TBWS8210-... | stay hinge SF DH timber 18-13 | 12/4 | 18 | 13 | 80 kg |
| TBWS8230-... | stay hinge SF DH timber 20-13 | 12/4 | 20 | 13 | 80 kg |
| TKWB7010-... | cover cap W timber | - | - | - | - |

- Profile related corner-bracket, but max. 35° angle
- For alternative colours of cover caps, see 'Cover Caps' page

- **Please observe:**
  Guidelines/notes on the product and on liability (VHBH directive as well as the other applicable documents listed - directive can be downloaded at www.beschlagindustrie.de/ggsb/richtlinien.asp )
  Specifications from the profile manufacturers/system owners (PVC, light metal) or DIN 68 121 "Wooden profiles for windows and portal doors"

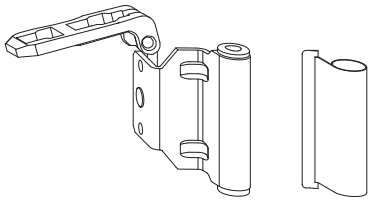

## Sales information

| Description | Part number | Surface | Colour | Box quantity |
|---|---|---|---|---|
| stay hinge SF DH timber 18-9 | TBWS8200-10001_ | Titan Silver | without | 1 pc |
| | TBWS8200-10006_ | Titan Silver | without | 100 pcs |
| stay hinge SF DH timber 18-13 | TBWS8210-10001_ | Titan Silver | without | 1 pc |
| | TBWS8210-10006_ | Titan Silver | without | 100 pcs |
| stay hinge SF DH timber 20-13 | TBWS8230-10001_ | Titan Silver | without | 1 pc |
| | TBWS8230-10006_ | Titan Silver | without | 100 pcs |
| cover cap W timber | TKWB7010-00401_ | neutral | RAL9016 | 1 pc |
| | TKWB7010-00406_ | neutral | RAL9016 | 100 pcs |
| | TKWB7010-00408_ | neutral | RAL9016 | 500 pcs |

1.2

## Technical information

| Part number | Description | Airgap | rebate width | sash weight | |
|---|---|---|---|---|---|
| TBSL8200-... | top hinge timber 4/15 | 4 | 15 | 150 kg | 6 |
| TBSL8100-... | top hinge timber 18 | 12/4 | 18 | 150 kg | 6 |
| TBSL8110-... | top hinge timber 20 | 12/4 | 20 | 150 kg | 6 |
| TBSB6020-... | top hinge pin Poly | - | - | - | - |
| TKSL0020-... | cover cap S | - | - | - | - |

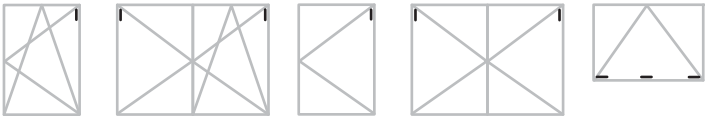

- The ZBDI0010 seal is self-adhesive and can be stuck on the bottom and top hinge in the double well area.
- For alternative colours of cover caps, see ‘Cover Caps’ page

- **Please observe:**
  Guidelines/notes on the product and on liability (VHBH directive as well as the other applicable documents listed - directive can be downloaded at www.beschlagindustrie.de/ggsb/richtlinien.asp )
  Specifications from the profile manufacturers/system owners (PVC, light metal) or DIN 68 121 “Wooden profiles for windows and portal doors”

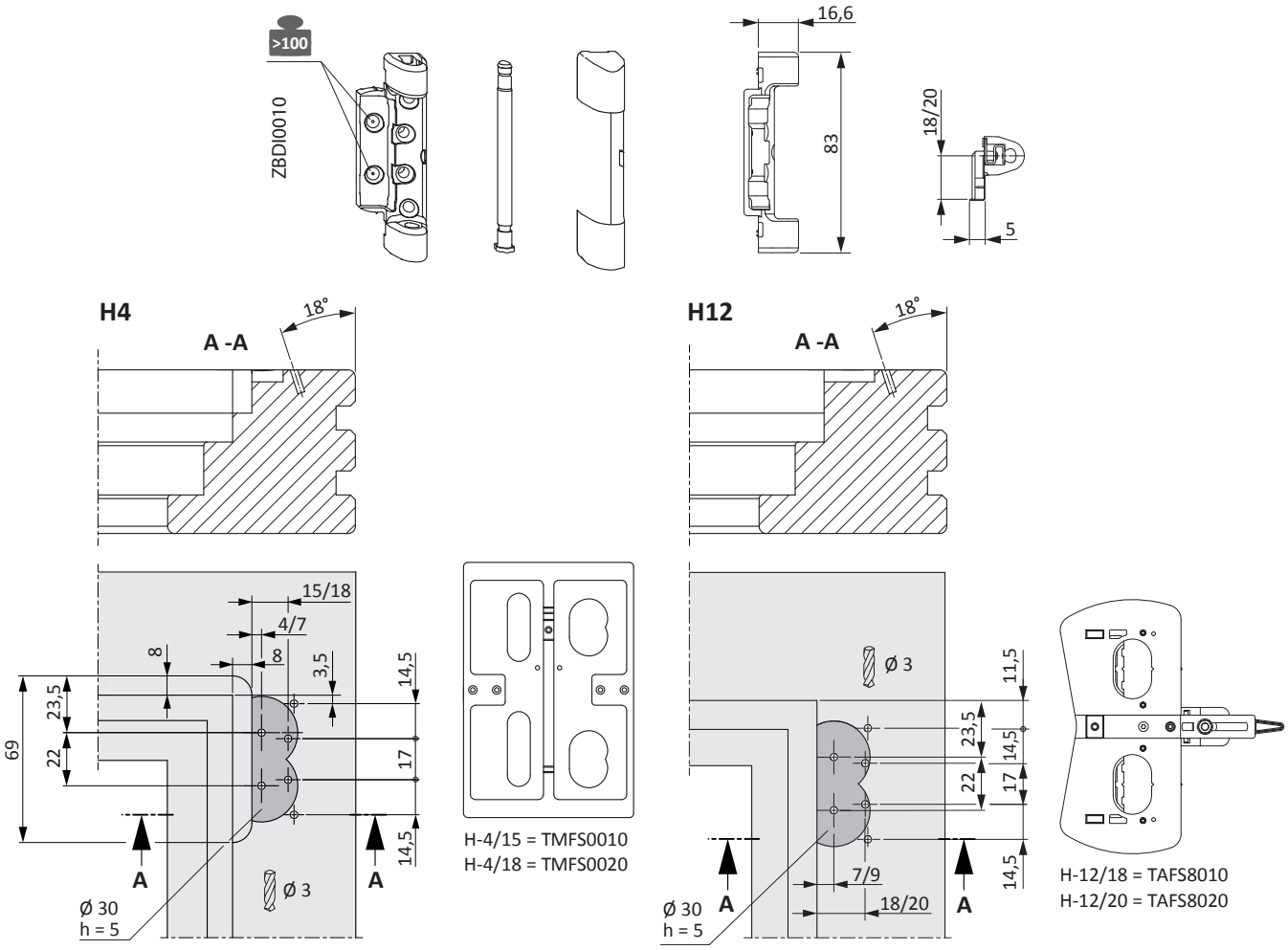

## Sales information

| Description | Part number | Surface | Colour | Box quantity |
|---|---|---|---|---|
| top hinge timber 4/15 | TBSL8200-10001_ | Titan Silver | without | 1 pc |
| | TBSL8200-10006_ | Titan Silver | without | 100 pcs |
| | TBSL8200-10406_ | Titan Silver | RAL9016 | 100 pcs |
| top hinge timber 18 | TBSL8100-10001_ | Titan Silver | without | 1 pc |
| | TBSL8100-10006_ | Titan Silver | without | 100 pcs |
| | TBSL8100-10401_ | Titan Silver | RAL9016 | 1 pc |
| | TBSL8100-10406_ | Titan Silver | RAL9016 | 100 pcs |
| | TBSL8100-1H401_ | Titan Silver | F9 titan m dark | 1 pc |
| | TBSL8100-1H406_ | Titan Silver | F9 titan m dark | 100 pcs |
| top hinge timber 20 | TBSL8110-10001_ | Titan Silver | without | 1 pc |
| | TBSL8110-10006_ | Titan Silver | without | 100 pcs |
| | TBSL8110-10401_ | Titan Silver | RAL9016 | 1 pc |
| | TBSL8110-10406_ | Titan Silver | RAL9016 | 100 pcs |
| top hinge pin Poly | TBSB6020-10001_ | Titan Silver | without | 1 pc |
| | TBSB6020-10006_ | Titan Silver | without | 100 pcs |
| | TBSB6020-10008_ | Titan Silver | without | 500 pcs |
| cover cap S | TKSL0020-00401_ | neutral | RAL9016 | 1 pc |
| | TKSL0020-00406_ | neutral | RAL9016 | 100 pcs |
| | TKSL0020-00408_ | neutral | RAL9016 | 500 pcs |

## Installation advice

- The external screws are inserted at an angle of 18°

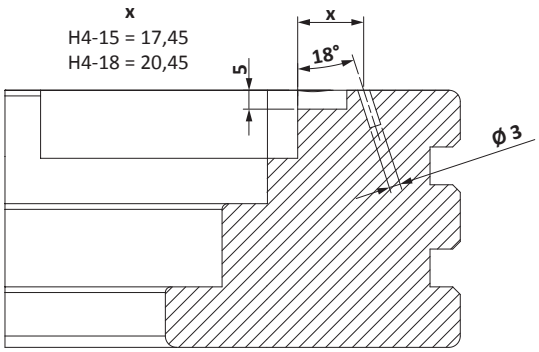


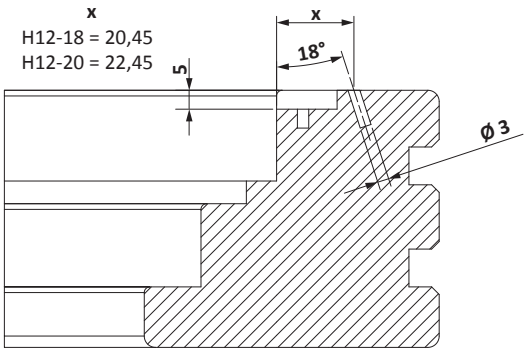

## Technical information

| Part number | Description | Airgap | rebate width | sash weight | |
|---|---|---|---|---|---|
| TMBS8400-... | bag top hinge RB DT30 H | 12/4 | 18 | 80 kg | 4 |
| TMBS8410-... | bag top hinge RB DT30 H | 12/4 | 20 | 80 kg | 4 |
| FKSL0030-... | cover cap S 7 RB | - | - | - | - |
| FKWB0031-... | cover cap W RB rh. | - | - | - | - |
| FKWB0032-... | cover cap W RB lh. | - | - | - | - |

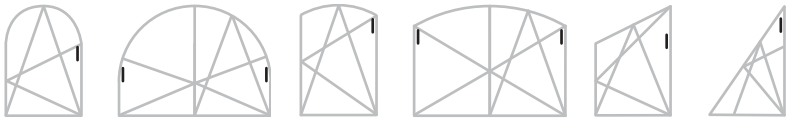

- For additional drilling and routing details refer to installation instructions RB
- For alternative colours of cover caps, see ‘Cover Caps’ page

- **Please observe:**
  Guidelines/notes on the product and on liability (VHBH directive as well as the other applicable documents listed - directive can be downloaded at www.beschlagindustrie.de/ggsb/richtlinien.asp )
  Specifications from the profile manufacturers/system owners (PVC, light metal) or DIN 68 121 “Wooden profiles for windows and portal doors”

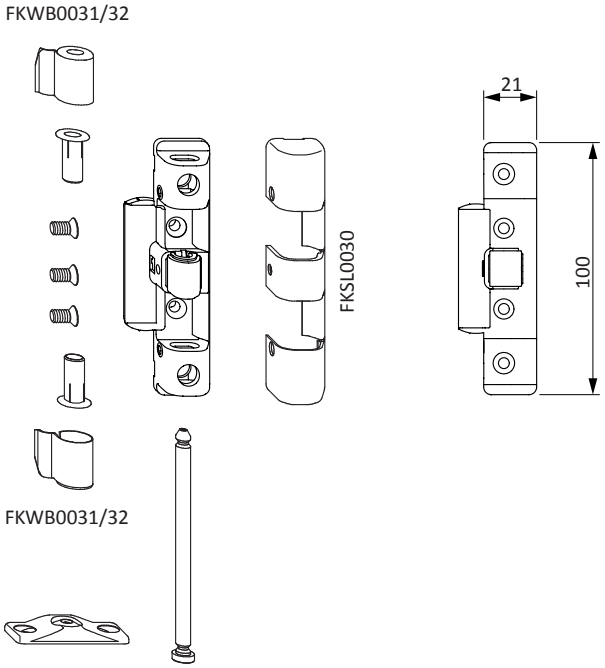

## Sales information

| Description | Part number | Surface | Colour | Box quantity |
|---|---|---|---|---|
| bag top hinge RB DT30 H | TMBS8400-10001_ | Titan Silver | without | 1 pc |
| | TMBS8400-10012_ | Titan Silver | without | 5 pcs |
| bag top hinge RB DT30 H | TMBS8410-10001_ | Titan Silver | without | 1 pc |
| | TMBS8410-10012_ | Titan Silver | without | 5 pcs |
| cover cap S 7 RB | FKSL0030-00401_ | neutral | RAL9016 | 1 pc |
| | FKSL0030-00406_ | neutral | RAL9016 | 100 pcs |
| cover cap W RB rh. | FKWB0031-00401_ | neutral | RAL9016 | 1 pc |
| | FKWB0031-00406_ | neutral | RAL9016 | 100 pcs |
| cover cap W RB lh. | FKWB0032-00401_ | neutral | RAL9016 | 1 pc |
| | FKWB0032-00406_ | neutral | RAL9016 | 100 pcs |

1.2

## Drill holes and routings

- Dimension Z varies according to arch size and must be marked accordingly
- 1. Start of the arch
  2. Start of the segmental arch
  3. Frame rebate edge
- Jig, refer to PDB

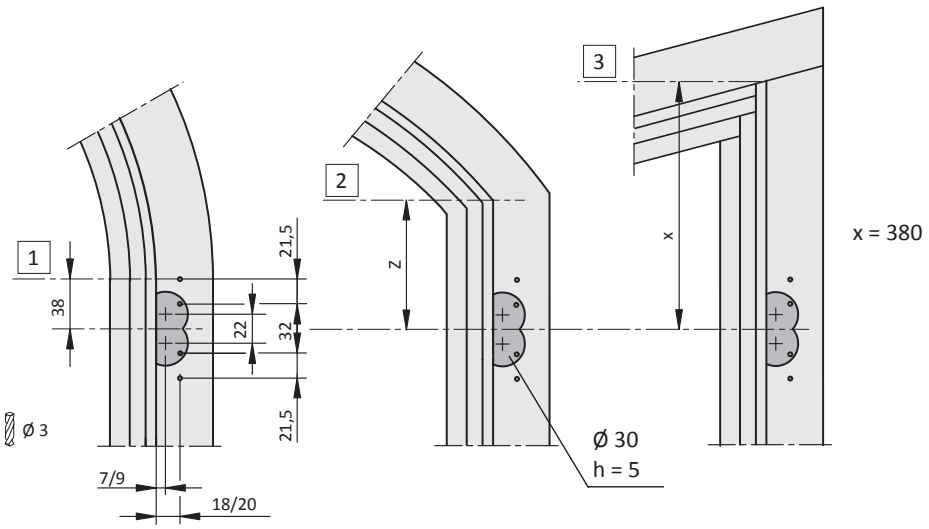


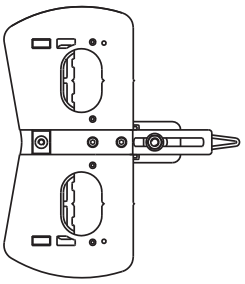

TAFSSE - H-12/18 = TAFS8010

TAFSSE - H-12/20 = TAFS8020

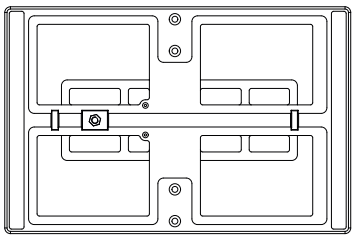

TAFSSE - H-4 = TAFS8060

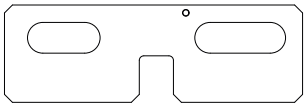

TAFSFS - H-4 = TAFS8050

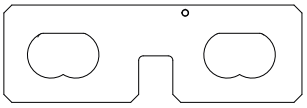

TAFSDT - H-4/18-9 = TAFS8040

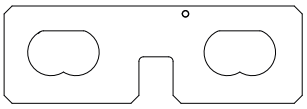

TAFSDT - H-4/15-9 = TAFS8030

## Technical information

| Part number | Description | Airgap | rebate width | Groove axis | |
|---|---|---|---|---|---|
| TBFB8100-... | sash hinge timber 18-9 | 12/4 | 18 | 9 | 2 |
| TBFB8110-... | sash hinge timber 18-13 | 12/4 | 18 | 13 | 2 |
| TBFB8130-... | sash hinge timber 20-13 | 12/4 | 20 | 13 | 2 |
| TKWB7010-... | cover cap W timber | - | - | - | - |

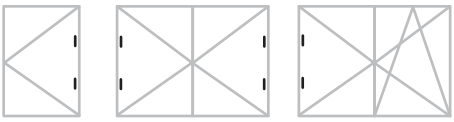

- For alternative colours of cover caps, see ‘Cover Caps’ page

- **Please observe:**
  Guidelines/notes on the product and on liability (VHBH directive as well as the other applicable documents listed - directive can be downloaded at www.beschlagindustrie.de/ggsb/richtlinien.asp )
  Specifications from the profile manufacturers/system owners (PVC, light metal) or DIN 68 121 “Wooden profiles for windows and portal doors”

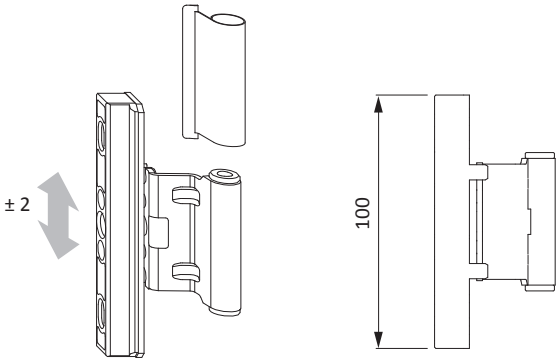


## Sales information

| Description | Part number | Surface | Colour | Box quantity |
|---|---|---|---|---|
| sash hinge timber 18-9 | TBFB8100-10001_ | Titan Silver | without | 1 pc |
| | TBFB8100-10005_ | Titan Silver | without | 50 pcs |
| sash hinge timber 18-13 | TBFB8110-10001_ | Titan Silver | without | 1 pc |
| | TBFB8110-10005_ | Titan Silver | without | 50 pcs |
| sash hinge timber 20-13 | TBFB8130-10001_ | Titan Silver | without | 1 pc |
| | TBFB8130-10005_ | Titan Silver | without | 50 pcs |
| cover cap W timber | TKWB7010-00401_ | neutral | RAL9016 | 1 pc |
| | TKWB7010-00406_ | neutral | RAL9016 | 100 pcs |
| | TKWB7010-00408_ | neutral | RAL9016 | 500 pcs |

1.2

## Technical information

| Part number | Description | Airgap | rebate width | Groove axis | sash weight | |
|---|---|---|---|---|---|---|
| TBKF8100-... | tilt sash hinge timber 18-9 | 12/4 | 18 | 9 | 80 kg | 2 |
| TBKF8120-... | tilt sash hinge timber 20-9 | 12/4 | 20 | 9 | 80 kg | 2 |
| TBKF8110-... | tilt sash hinge timber 18-13 | 12/4 | 18 | 13 | 80 kg | 2 |
| TBKF8130-... | tilt sash hinge timber 20-13 | 12/4 | 20 | 13 | 80 kg | 2 |
| TBKF8140-... | tilt sash hinge timber 4/15-9 | 4 | 15 | 9 | 80 kg | 2 |
| TKWB7010-... | cover cap W timber | - | - | - | - | - |

- For alternative colours of cover caps, see ‘Cover Caps’ page

- **Please observe:**
  Guidelines/notes on the product and on liability (VHBH directive as well as the other applicable documents listed - directive can be downloaded at www.beschlagindustrie.de/ggsb/richtlinien.asp )
  Specifications from the profile manufacturers/system owners (PVC, light metal) or DIN 68 121 “Wooden profiles for windows and portal doors”

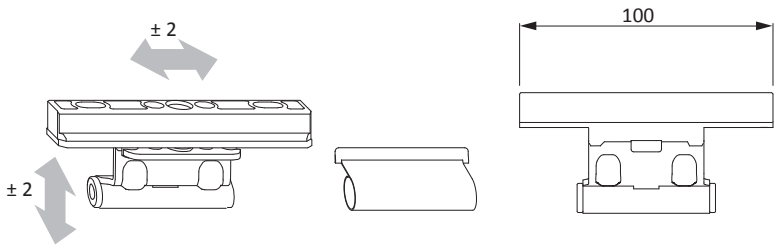

## Sales information

| Description | Part number | Surface | Colour | Box quantity |
|---|---|---|---|---|
| tilt sash hinge timber 18-9 | TBKF8100-10001_ | Titan Silver | without | 1 pc |
| | TBKF8100-10005_ | Titan Silver | without | 50 pcs |
| | TBKF8100-10401_ | Titan Silver | RAL9016 | 1 pc |
| | TBKF8100-10405_ | Titan Silver | RAL9016 | 50 pcs |
| | TBKF8100-1H401_ | Titan Silver | F9 titan m dark | 1 pc |
| | TBKF8100-1H405_ | Titan Silver | F9 titan m dark | 50 pcs |
| tilt sash hinge timber 20-9 | TBKF8120-10001_ | Titan Silver | without | 1 pc |
| | TBKF8120-10005_ | Titan Silver | without | 50 pcs |
| tilt sash hinge timber 18-13 | TBKF8110-10001_ | Titan Silver | without | 1 pc |
| | TBKF8110-10005_ | Titan Silver | without | 50 pcs |
| | TBKF8110-10401_ | Titan Silver | RAL9016 | 1 pc |
| | TBKF8110-10405_ | Titan Silver | RAL9016 | 50 pcs |
| | TBKF8110-1H401_ | Titan Silver | F9 titan m dark | 1 pc |
| | TBKF8110-1H405_ | Titan Silver | F9 titan m dark | 50 pcs |
| tilt sash hinge timber 20-13 | TBKF8130-10001_ | Titan Silver | without | 1 pc |
| | TBKF8130-10005_ | Titan Silver | without | 50 pcs |
| | TBKF8130-10401_ | Titan Silver | RAL9016 | 1 pc |
| | TBKF8130-10405_ | Titan Silver | RAL9016 | 50 pcs |
| tilt sash hinge timber 4/15-9 | TBKF8140-10001_ | Titan Silver | without | 1 pc |
| | TBKF8140-10005_ | Titan Silver | without | 50 pcs |
| cover cap W timber | TKWB7010-00401_ | neutral | RAL9016 | 1 pc |
| | TKWB7010-00406_ | neutral | RAL9016 | 100 pcs |
| | TKWB7010-00408_ | neutral | RAL9016 | 500 pcs |

## Technical information

| Part number | Description | Airgap | rebate width | Groove axis | sash weight | |
|---|---|---|---|---|---|---|
| TBDF0100-... | turn only hinge RB DH timber 12/18-13 | 12 | 18 | 13 | 80 kg | 4 |
| TBDF0110-... | turn only hinge RB DH timber 12/18-9 | 12 | 18 | 9 | 80 kg | 4 |
| TBDF0120-... | turn only hinge RB DH timber 12/20-13 | 12 | 20 | 13 | 80 kg | 4 |
| TBDF0130-... | turn only hinge RB DH timber 12/20-9 | 12 | 20 | 9 | 80 kg | 4 |
| TKWB7010-... | cover cap W timber | - | - | - | - | - |

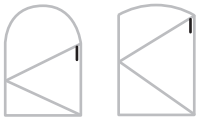

- For alternative colours of cover caps, see ‘Cover Caps’ page

- **Please observe:**
  Guidelines/notes on the product and on liability (VHBH directive as well as the other applicable documents listed - directive can be downloaded at www.beschlagindustrie.de/ggsb/richtlinien.asp )
  Specifications from the profile manufacturers/system owners (PVC, light metal) or DIN 68 121 “Wooden profiles for windows and portal doors”

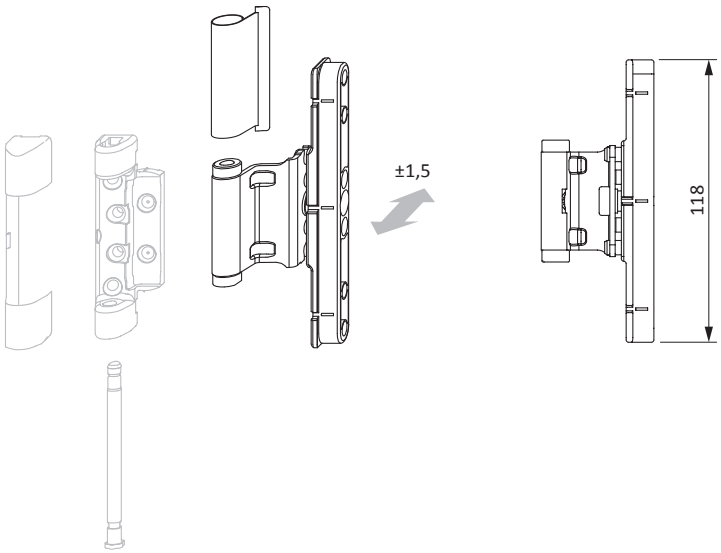


## Sales information

| Description | Part number | Surface | Colour | Box quantity |
|---|---|---|---|---|
| turn only hinge RB DH timber 12/18-13 | TBDF0100-10001_ | Titan Silver | without | 1 pc |
| | TBDF0100-10004_ | Titan Silver | without | 25 pcs |
| turn only hinge RB DH timber 12/18-9 | TBDF0110-10001_ | Titan Silver | without | 1 pc |
| | TBDF0110-10004_ | Titan Silver | without | 25 pcs |
| turn only hinge RB DH timber 12/20-13 | TBDF0120-10001_ | Titan Silver | without | 1 pc |
| | TBDF0120-10004_ | Titan Silver | without | 25 pcs |
| turn only hinge RB DH timber 12/20-9 | TBDF0130-10001_ | Titan Silver | without | 1 pc |
| | TBDF0130-10004_ | Titan Silver | without | 25 pcs |
| cover cap W timber | TKWB7010-00401_ | neutral | RAL9016 | 1 pc |
| | TKWB7010-00406_ | neutral | RAL9016 | 100 pcs |
| | TKWB7010-00408_ | neutral | RAL9016 | 500 pcs |

## Technical information

| Part number | Description | Airgap | rebate width | Groove axis | sash weight | |
|---|---|---|---|---|---|---|
| FBDF0040-... | turn only hinge RB timber 12/18-9 | 12 | 18 | 9 | 80 kg | 4 |
| FBDF0050-... | turn only hinge RB timber 12/18-13 | 12 | 18 | 13 | 80 kg | 4 |
| FBDF0010-... | turn only hinge RB timber 12/20-13 | 12 | 20 | 13 | 80 kg | 4 |

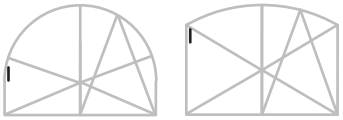

- **Please observe:**
  Guidelines/notes on the product and on liability (VHBH directive as well as the other applicable documents listed - directive can be downloaded at www.beschlagindustrie.de/ggsb/richtlinien.asp )
  Specifications from the profile manufacturers/system owners (PVC, light metal) or DIN 68 121 “Wooden profiles for windows and portal doors”

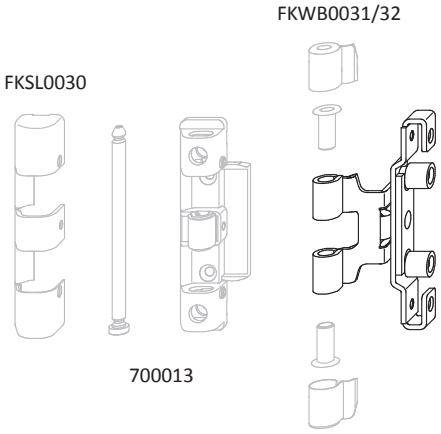


## Sales information

| Description | Part number | Surface | Colour | Box quantity |
|---|---|---|---|---|
| turn only hinge RB timber 12/18-9 | FBDF0040-10001_ | Titan Silver | without | 1 pc |
| | FBDF0040-10004_ | Titan Silver | without | 25 pcs |
| turn only hinge RB timber 12/18-13 | FBDF0050-10001_ | Titan Silver | without | 1 pc |
| | FBDF0050-10004_ | Titan Silver | without | 25 pcs |
| turn only hinge RB timber 12/20-13 | FBDF0010-10001_ | Titan Silver | without | 1 pc |
| | FBDF0010-10004_ | Titan Silver | without | 25 pcs |

1.2

## Technical information

| Part number | Description | sash weight | |
|---|---|---|---|
| TBDF6010-... | turn only hinge timber TITAN .. | 80 kg | 2 |
| TKWB0010-... | cover cap W PVC | - | - |
| TKDF0010-... | cover cap DFB | - | - |

- Note:
  Observe the total sash weight of the interconnected sashes with regard to the max. permissable sash weight of the hinge side!"
- The overall sash rebate width of the connected sashes may not exceed 1650 mm
- Fenestration screw fixing: 4x50 mm
- Turn only hinge H requirements:
  2 pieces on FFH 480-1400 mm
  3 pieces on FFH 1401-2400 mm
  4 pieces on FFH 2401-3000 mm

- **Please observe:**
  Guidelines/notes on the product and on liability (VHBH directive as well as the other applicable documents listed - directive can be downloaded at www.beschlagindustrie.de/ggsb/richtlinien.asp )
  Specifications from the profile manufacturers/system owners (PVC, light metal) or DIN 68 121 “Wooden profiles for windows and portal doors”

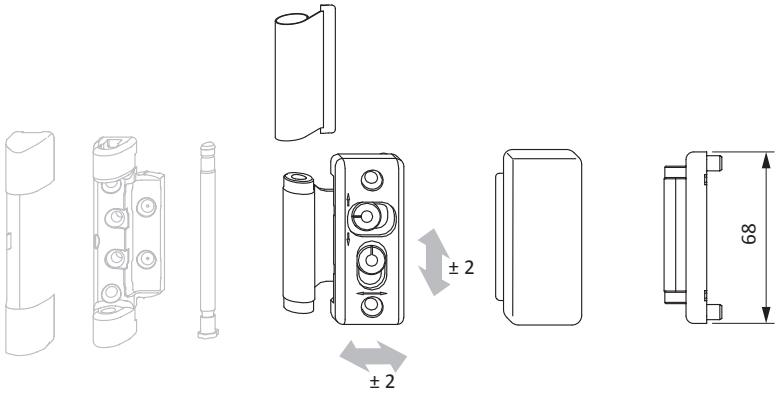


## Sales information

| Description | Part number | Surface | Colour | Box quantity |
|---|---|---|---|---|
| turn only hinge timber TITAN .. | TBDF6010-10001_ | Titan Silver | without | 1 pc |
| | TBDF6010-10004_ | Titan Silver | without | 25 pcs |
| cover cap W PVC | TKWB0010-00201_ | neutral | RAL9003 | 1 pc |
| | TKWB0010-00206_ | neutral | RAL9003 | 100 pcs |
| | TKWB0010-01101_ | neutral | RAL8019 | 1 pc |
| | TKWB0010-01106_ | neutral | RAL8019 | 100 pcs |
| | TKWB0010-L2401_ | lacquered | EV1/EV1 | 1 pc |
| | TKWB0010-L2406_ | lacquered | EV1/EV1 | 100 pcs |
| cover cap DFB | TKDF0010-00201_ | neutral | RAL9003 | 1 pc |
| | TKDF0010-00205_ | neutral | RAL9003 | 50 pcs |
| | TKDF0010-01101_ | neutral | RAL8019 | 1 pc |
| | TKDF0010-01105_ | neutral | RAL8019 | 50 pcs |
| | TKDF0010-L2401_ | lacquered | EV1/EV1 | 1 pc |
| | TKDF0010-L2405_ | lacquered | EV1/EV1 | 50 pcs |

## Installation advice

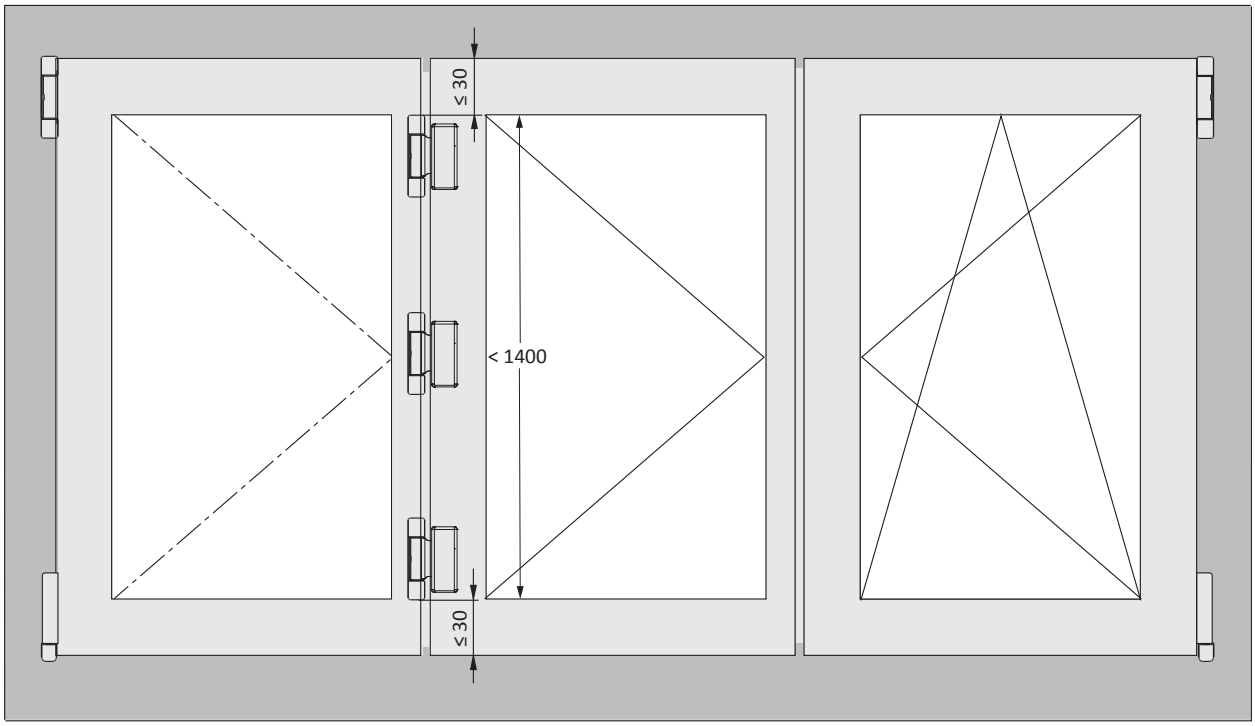


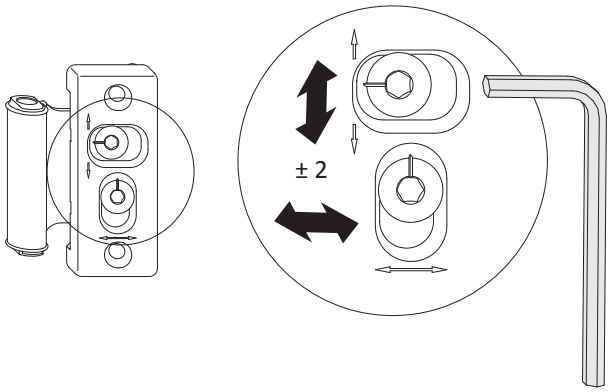

1.2

## Technical information

| Part number | Description | Airgap | sash weight | |
|---|---|---|---|---|
| FBEL0400-... | top hinge 12/ | 12 | 80 kg | 2 |
| FBEL0410-... | bottom hinge 12/ | 12 | 80 kg | 2 |
| FBFB0041-... | bottom sash hinge rh. | - | 80 kg | 3 |
| FBFB0042-... | bottom sash hinge lh. | - | 80 kg | 3 |
| FBFB0051-... | top sash hinge rh. | - | 80 kg | 3 |
| FBFB0052-... | top sash hinge lh. | - | 80 kg | 3 |
| FKDZ0010-... | cover cap DZB timber | - | - | - |

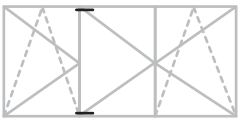

- French-window hardware for 3-sashed windows and balcony-doors
- For basic security
- 1. packer FL on connection sashes as Tilt + Turn sash
- 2. packer for bottom hinge on sound insulating windows
- A - jig when designing connecting sash as turn sash
- B - jig when designing connecting sash as tilt and turn sash
- C - sound-absorbing window: jig when desigining connecting sash as turn sash
- **Please observe:**
  Guidelines/notes on the product and on liability (VHBH directive as well as the other applicable documents listed - directive can be downloaded at www.beschlagindustrie.de/ggsb/richtlinien.asp )
  Specifications from the profile manufacturers/system owners (PVC, light metal) or DIN 68 121 “Wooden profiles for windows and portal doors”

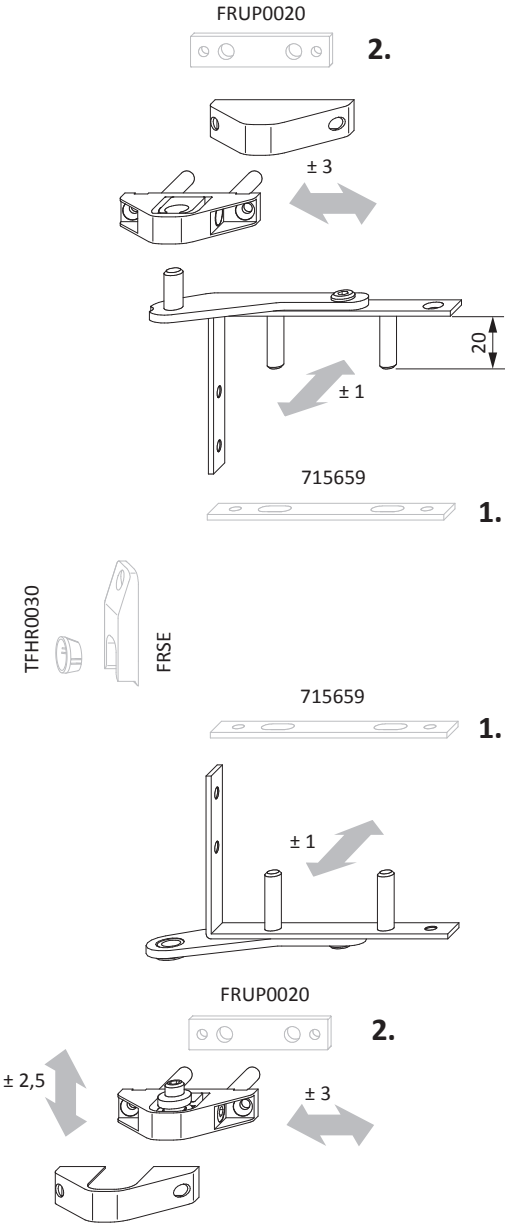
FRUP0020
2.
± 3
20
± 1
715659
1.
TFHR0030
FRSE
715659
1.
± 1
FRUP0020
2.
± 2,5
± 3

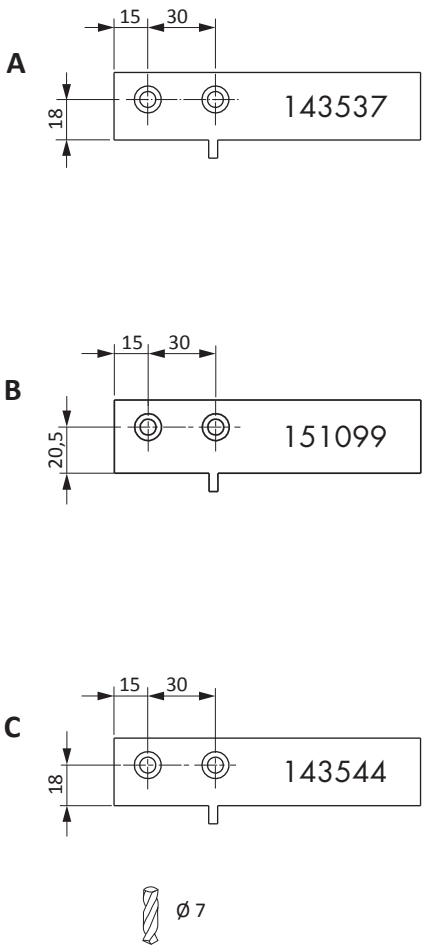
A
15
30
18
143537
B
15
30
20,5
151099
C
15
30
18
143544
Ø 7

## Sales information



| Description | Part number | Surface | Colour | Box quantity |
|---|---|---|---|---|
| top hinge 12/ | FBEL0400-10001_ | Titan Silver | without | 1 pc |
| | FBEL0400-10005_ | Titan Silver | without | 50 pcs |
| bottom hinge 12/ | FBEL0410-10001_ | Titan Silver | without | 1 pc |
| | FBEL0410-10005_ | Titan Silver | without | 50 pcs |
| bottom sash hinge rh. | FBFB0041-10001_ | Titan Silver | without | 1 pc |
| | FBFB0041-10005_ | Titan Silver | without | 50 pcs |
| | FBFB0041-10201_ | Titan Silver | RAL9003 | 1 pc |
| | FBFB0041-10205_ | Titan Silver | RAL9003 | 50 pcs |
| bottom sash hinge lh. | FBFB0042-10001_ | Titan Silver | without | 1 pc |
| | FBFB0042-10005_ | Titan Silver | without | 50 pcs |
| | FBFB0042-10201_ | Titan Silver | RAL9003 | 1 pc |
| | FBFB0042-10205_ | Titan Silver | RAL9003 | 50 pcs |
| top sash hinge rh. | FBFB0051-10001_ | Titan Silver | without | 1 pc |
| | FBFB0051-10005_ | Titan Silver | without | 50 pcs |
| | FBFB0051-10201_ | Titan Silver | RAL9003 | 1 pc |
| | FBFB0051-10205_ | Titan Silver | RAL9003 | 50 pcs |
| top sash hinge lh. | FBFB0052-10001_ | Titan Silver | without | 1 pc |
| | FBFB0052-10005_ | Titan Silver | without | 50 pcs |
| | FBFB0052-10201_ | Titan Silver | RAL9003 | 1 pc |
| | FBFB0052-10205_ | Titan Silver | RAL9003 | 50 pcs |
| cover cap DZB timber | FKDZ0010-00201_ | neutral | RAL9003 | 1 pc |
| | FKDZ0010-00206_ | neutral | RAL9003 | 100 pcs |
| | FKDZ0010-01101_ | neutral | RAL8019 | 1 pc |
| | FKDZ0010-01106_ | neutral | RAL8019 | 100 pcs |

## Drill holes and routings

- Use of jigs:
  create holes Ø 7mm for bottom hinge and sash hinge
  with following depths:
  track 38 mm, sash frame 27 mm

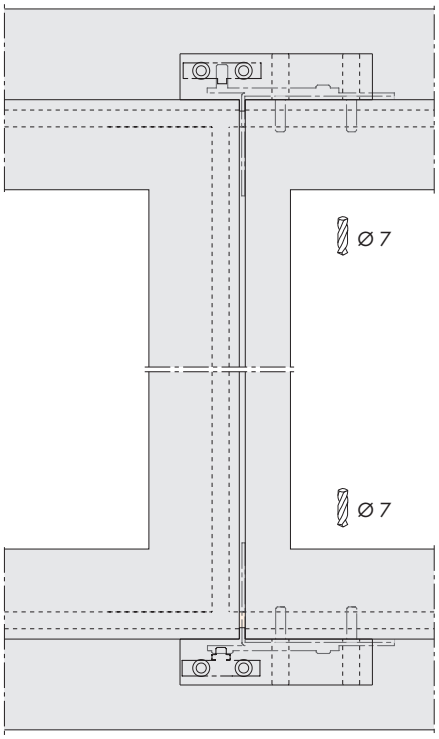


## Installation advice

- * track size inc. cover cap + 1 mm and packer 2 mm

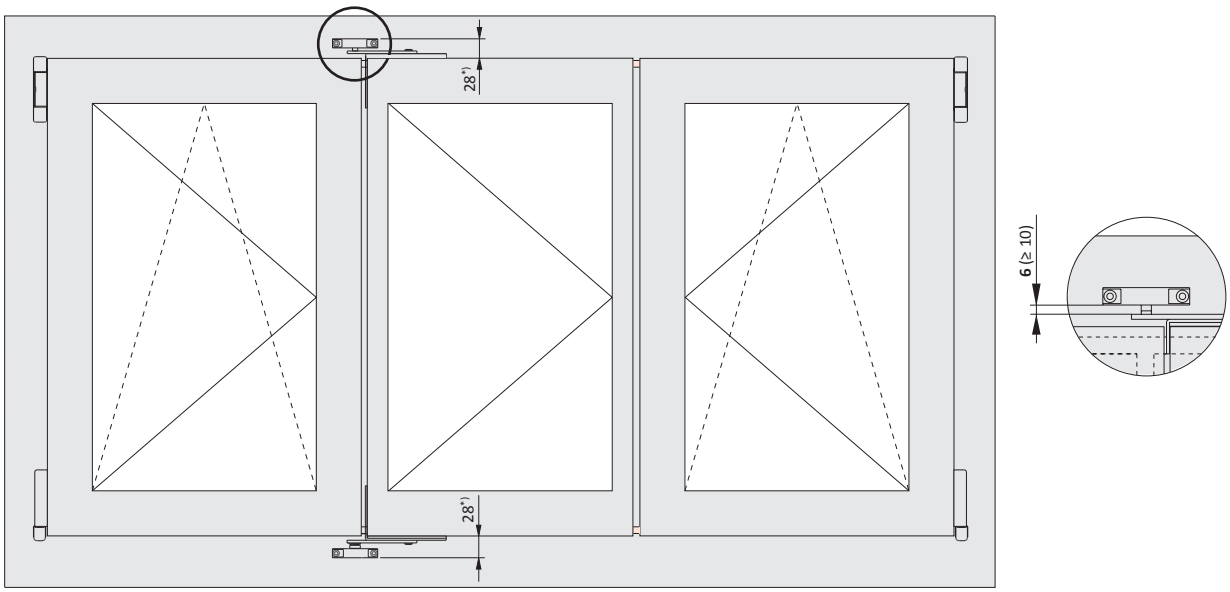

1.2

## Technical information

| Part number | Description |
|---|---|
| ZSFP0010-... | security cable 300 |
| ZSFP0020-... | catch plate 130 |

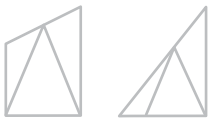

- For tilt sash elements in special shapes
- The positioning of the security cable/catch plate depends on the design
- Packer refer to PDB line item FRUP02

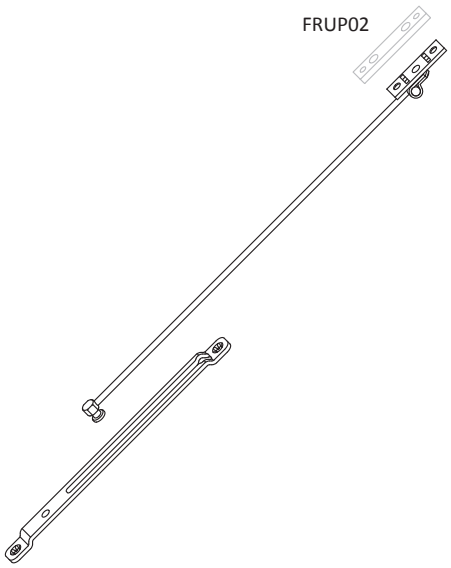


## Sales information

| Description | Part number | Surface | Colour | Box quantity |
|---|---|---|---|---|
| security cable 300 | ZSFP0010-10001_ | Titan Silver | without | 1 pc |
| | ZSFP0010-10002_ | Titan Silver | without | 10 pcs |
| catch plate 130 | ZSFP0020-10001_ | Titan Silver | without | 1 pc |
| | ZSFP0020-10002_ | Titan Silver | without | 10 pcs |

## Technical information

| Part number | Description |
|---|---|
| TKFE7011-... | cover cap FEB rh. |
| TKFE7012-... | cover cap FEB lh. |
| TKEO0010-... | cover cap EL O MB |
| TKEU0010-... | cover cap EL U |
| TKWB7010-... | cover cap W timber |
| TKSL0020-... | cover cap S |

TKFE701_

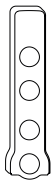

TKEO0010

TKEU0010

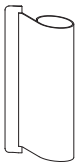

TKWB7010

TKSL0020

## Sales information



| RAL9001 | | | |
|---|---|---|---|
| **Description** | **Part number** | **Surface** | **Box quantity** |
| cover cap FEB rh. | TKFE7011-00101_ | neutral | 1 pc |
| | TKFE7011-00106_ | neutral | 100 pcs |
| cover cap FEB lh. | TKFE7012-00101_ | neutral | 1 pc |
| | TKFE7012-00106_ | neutral | 100 pcs |
| cover cap EL O MB | TKEO0010-00101_ | neutral | 1 pc |
| | TKEO0010-00106_ | neutral | 100 pcs |
| | TKEO0010-00108_ | neutral | 500 pcs |
| cover cap EL U | TKEU0010-00101_ | neutral | 1 pc |
| | TKEU0010-00106_ | neutral | 100 pcs |
| | TKEU0010-00108_ | neutral | 500 pcs |
| cover cap W timber | TKWB7010-00101_ | neutral | 1 pc |
| | TKWB7010-00106_ | neutral | 100 pcs |
| cover cap S | TKSL0020-00101_ | neutral | 1 pc |
| | TKSL0020-00106_ | neutral | 100 pcs |
| | TKSL0020-00108_ | neutral | 500 pcs |
| **RAL9003** | | | |
| **Description** | **Part number** | **Surface** | **Box quantity** |
| cover cap FEB rh. | TKFE7011-00201_ | neutral | 1 pc |
| | TKFE7011-00206_ | neutral | 100 pcs |
| cover cap FEB lh. | TKFE7012-00201_ | neutral | 1 pc |
| | TKFE7012-00206_ | neutral | 100 pcs |
| cover cap EL O MB | TKEO0010-00201_ | neutral | 1 pc |
| | TKEO0010-00206_ | neutral | 100 pcs |
| cover cap EL U | TKEU0010-00201_ | neutral | 1 pc |
| | TKEU0010-00206_ | neutral | 100 pcs |
| cover cap W timber | TKWB7010-00201_ | neutral | 1 pc |
| | TKWB7010-00206_ | neutral | 100 pcs |
| cover cap S | TKSL0020-00201_ | neutral | 1 pc |
| | TKSL0020-00206_ | neutral | 100 pcs |
| **RAL9016** | | | |
| **Description** | **Part number** | **Surface** | **Box quantity** |
| cover cap FEB rh. | TKFE7011-00401_ | neutral | 1 pc |
| | TKFE7011-00406_ | neutral | 100 pcs |
| | TKFE7011-00408_ | neutral | 500 pcs |
| cover cap FEB lh. | TKFE7012-00401_ | neutral | 1 pc |
| | TKFE7012-00406_ | neutral | 100 pcs |
| | TKFE7012-00408_ | neutral | 500 pcs |
| cover cap EL O MB | TKEO0010-00401_ | neutral | 1 pc |
| | TKEO0010-00406_ | neutral | 100 pcs |
| | TKEO0010-00408_ | neutral | 500 pcs |
| cover cap EL U | TKEU0010-00401_ | neutral | 1 pc |
| | TKEU0010-00406_ | neutral | 100 pcs |
| | TKEU0010-00408_ | neutral | 500 pcs |
| cover cap W timber | TKWB7010-00401_ | neutral | 1 pc |
| | TKWB7010-00406_ | neutral | 100 pcs |
| | TKWB7010-00408_ | neutral | 500 pcs |
| cover cap S | TKSL0020-00401_ | neutral | 1 pc |
| | TKSL0020-00406_ | neutral | 100 pcs |
| | TKSL0020-00408_ | neutral | 500 pcs |

## Sales information

| RAL8019 | | | |
|---|---|---|---|
| **Description** | **Part number** | **Surface** | **Box quantity** |
| cover cap FEB rh. | TKFE7011-01101_ | neutral | 1 pc |
| | TKFE7011-01106_ | neutral | 100 pcs |
| cover cap FEB lh. | TKFE7012-01101_ | neutral | 1 pc |
| | TKFE7012-01106_ | neutral | 100 pcs |
| cover cap EL O MB | TKEO0010-01101_ | neutral | 1 pc |
| | TKEO0010-01106_ | neutral | 100 pcs |
| cover cap EL U | TKEU0010-01101_ | neutral | 1 pc |
| | TKEU0010-01106_ | neutral | 100 pcs |
| cover cap W timber | TKWB7010-01101_ | neutral | 1 pc |
| | TKWB7010-01106_ | neutral | 100 pcs |
| cover cap S | TKSL0020-01101_ | neutral | 1 pc |
| | TKSL0020-01106_ | neutral | 100 pcs |
| **RAL8022** | | | |
| **Description** | **Part number** | **Surface** | **Box quantity** |
| cover cap FEB rh. | TKFE7011-01201_ | neutral | 1 pc |
| | TKFE7011-01206_ | neutral | 100 pcs |
| | TKFE7011-01208_ | neutral | 500 pcs |
| cover cap FEB lh. | TKFE7012-01201_ | neutral | 1 pc |
| | TKFE7012-01206_ | neutral | 100 pcs |
| | TKFE7012-01208_ | neutral | 500 pcs |
| cover cap EL O MB | TKEO0010-01201_ | neutral | 1 pc |
| | TKEO0010-01206_ | neutral | 100 pcs |
| | TKEO0010-01208_ | neutral | 500 pcs |
| cover cap EL U | TKEU0010-01201_ | neutral | 1 pc |
| | TKEU0010-01206_ | neutral | 100 pcs |
| | TKEU0010-01208_ | neutral | 500 pcs |
| cover cap W timber | TKWB7010-01201_ | neutral | 1 pc |
| | TKWB7010-01206_ | neutral | 100 pcs |
| | TKWB7010-01208_ | neutral | 500 pcs |
| cover cap S | TKSL0020-01201_ | neutral | 1 pc |
| | TKSL0020-01206_ | neutral | 100 pcs |
| | TKSL0020-01208_ | neutral | 500 pcs |
| **EV1/EV1** | | | |
| **Description** | **Part number** | **Surface** | **Box quantity** |
| cover cap FEB rh. | TKFE7011-L2401_ | lacquered | 1 pc |
| | TKFE7011-L2406_ | lacquered | 100 pcs |
| | TKFE7011-L2408_ | lacquered | 500 pcs |
| cover cap FEB lh. | TKFE7012-L2401_ | lacquered | 1 pc |
| | TKFE7012-L2406_ | lacquered | 100 pcs |
| | TKFE7012-L2408_ | lacquered | 500 pcs |
| cover cap EL O MB | TKEO0010-L2401_ | lacquered | 1 pc |
| | TKEO0010-L2406_ | lacquered | 100 pcs |
| | TKEO0010-L2408_ | lacquered | 500 pcs |
| cover cap EL U | TKEU0010-L2401_ | lacquered | 1 pc |
| | TKEU0010-L2406_ | lacquered | 100 pcs |
| | TKEU0010-L2408_ | lacquered | 500 pcs |
| cover cap W timber | TKWB7010-L2401_ | lacquered | 1 pc |
| | TKWB7010-L2406_ | lacquered | 100 pcs |
| | TKWB7010-L2408_ | lacquered | 500 pcs |

## Sales information



| EV1/EV1 | | | |
|---|---|---|---|
| **Description** | **Part number** | **Surface** | **Box quantity** |
| cover cap S | TKSL0020-L2401_ | lacquered | 1 pc |
| | TKSL0020-L2406_ | lacquered | 100 pcs |
| | TKSL0020-L2408_ | lacquered | 500 pcs |
| **Si-silver** | | | |
| **Description** | **Part number** | **Surface** | **Box quantity** |
| cover cap FEB rh. | TKFE7011-L2501_ | lacquered | 1 pc |
| | TKFE7011-L2506_ | lacquered | 100 pcs |
| cover cap FEB lh. | TKFE7012-L2501_ | lacquered | 1 pc |
| | TKFE7012-L2506_ | lacquered | 100 pcs |
| cover cap EL O MB | TKEO0010-L2501_ | lacquered | 1 pc |
| | TKEO0010-L2506_ | lacquered | 100 pcs |
| cover cap EL U | TKEU0010-L2501_ | lacquered | 1 pc |
| | TKEU0010-L2506_ | lacquered | 100 pcs |
| cover cap W timber | TKWB7010-L2501_ | lacquered | 1 pc |
| | TKWB7010-L2506_ | lacquered | 100 pcs |
| cover cap S | TKSL0020-L2501_ | lacquered | 1 pc |
| | TKSL0020-L2506_ | lacquered | 100 pcs |
| **Si-mid.bronze** | | | |
| **Description** | **Part number** | **Surface** | **Box quantity** |
| cover cap FEB rh. | TKFE7011-03101_ | neutral | 1 pc |
| | TKFE7011-03106_ | neutral | 100 pcs |
| cover cap FEB lh. | TKFE7012-03101_ | neutral | 1 pc |
| | TKFE7012-03106_ | neutral | 100 pcs |
| cover cap EL O MB | TKEO0010-03101_ | neutral | 1 pc |
| | TKEO0010-03106_ | neutral | 100 pcs |
| cover cap EL U | TKEU0010-03101_ | neutral | 1 pc |
| | TKEU0010-03106_ | neutral | 100 pcs |
| cover cap W timber | TKWB7010-03101_ | neutral | 1 pc |
| | TKWB7010-03106_ | neutral | 100 pcs |
| cover cap S | TKSL0020-03101_ | neutral | 1 pc |
| | TKSL0020-03106_ | neutral | 100 pcs |
| **titan m. bright** | | | |
| **Description** | **Part number** | **Surface** | **Box quantity** |
| cover cap FEB rh. | TKFE7011-L3401_ | lacquered | 1 pc |
| | TKFE7011-L3406_ | lacquered | 100 pcs |
| cover cap FEB lh. | TKFE7012-L3401_ | lacquered | 1 pc |
| | TKFE7012-L3406_ | lacquered | 100 pcs |
| cover cap EL O MB | TKEO0010-L3401_ | lacquered | 1 pc |
| | TKEO0010-L3406_ | lacquered | 100 pcs |
| cover cap EL U | TKEU0010-L3401_ | lacquered | 1 pc |
| | TKEU0010-L3406_ | lacquered | 100 pcs |
| cover cap W timber | TKWB7010-L3401_ | lacquered | 1 pc |
| | TKWB7010-L3406_ | lacquered | 100 pcs |
| cover cap S | TKSL0020-L3401_ | lacquered | 1 pc |
| | TKSL0020-L3406_ | lacquered | 100 pcs |
| **gold shining** | | | |
| **Description** | **Part number** | **Surface** | **Box quantity** |
| cover cap FEB rh. | TKFE7011-L3801_ | lacquered | 1 pc |
| | TKFE7011-L3806_ | lacquered | 100 pcs |

## Sales information

| gold shining | | | |
|---|---|---|---|
| **Description** | **Part number** | **Surface** | **Box quantity** |
| cover cap FEB lh. | TKFE7012-L3801_ | lacquered | 1 pc |
| | TKFE7012-L3806_ | lacquered | 100 pcs |
| cover cap EL O MB | TKEO0010-L3801_ | lacquered | 1 pc |
| | TKEO0010-L3806_ | lacquered | 100 pcs |
| cover cap EL U | TKEU0010-L3801_ | lacquered | 1 pc |
| | TKEU0010-L3806_ | lacquered | 100 pcs |
| cover cap W timber | TKWB7010-L3801_ | lacquered | 1 pc |
| | TKWB7010-L3806_ | lacquered | 100 pcs |
| cover cap S | TKSL0020-L3801_ | lacquered | 1 pc |
| | TKSL0020-L3806_ | lacquered | 100 pcs |
| **SI-old gold** | | | |
| **Description** | **Part number** | **Surface** | **Box quantity** |
| cover cap FEB rh. | TKFE7011-0H001_ | neutral | 1 pc |
| | TKFE7011-0H006_ | neutral | 100 pcs |
| cover cap FEB lh. | TKFE7012-0H001_ | neutral | 1 pc |
| | TKFE7012-0H006_ | neutral | 100 pcs |
| cover cap EL O MB | TKEO0010-0H001_ | neutral | 1 pc |
| | TKEO0010-0H006_ | neutral | 100 pcs |
| cover cap EL U | TKEU0010-0H001_ | neutral | 1 pc |
| | TKEU0010-0H006_ | neutral | 100 pcs |
| cover cap W timber | TKWB7010-0H001_ | neutral | 1 pc |
| | TKWB7010-0H006_ | neutral | 100 pcs |
| cover cap S | TKSL0020-0H001_ | neutral | 1 pc |
| | TKSL0020-0H006_ | neutral | 100 pcs |
| **F9 titan m. dark** | | | |
| **Description** | **Part number** | **Surface** | **Box quantity** |
| cover cap FEB rh. | TKFE7011-LH401_ | lacquered | 1 pc |
| | TKFE7011-LH406_ | lacquered | 100 pcs |
| cover cap FEB lh. | TKFE7012-LH401_ | lacquered | 1 pc |
| | TKFE7012-LH406_ | lacquered | 100 pcs |
| cover cap EL O MB | TKEO0010-LH401_ | lacquered | 1 pc |
| | TKEO0010-LH406_ | lacquered | 100 pcs |
| cover cap EL U | TKEU0010-LH401_ | lacquered | 1 pc |
| | TKEU0010-LH406_ | lacquered | 100 pcs |
| cover cap W timber | TKWB7010-LH401_ | lacquered | 1 pc |
| | TKWB7010-LH406_ | lacquered | 100 pcs |
| cover cap S | TKSL0020-LH401_ | lacquered | 1 pc |
| | TKSL0020-LH406_ | lacquered | 100 pcs |
| **Si-white-alu** | | | |
| **Description** | **Part number** | **Surface** | **Box quantity** |
| cover cap FEB rh. | TKFE7011-0M201_ | neutral | 1 pc |
| | TKFE7011-0M206_ | neutral | 100 pcs |
| cover cap FEB lh. | TKFE7012-0M201_ | neutral | 1 pc |
| | TKFE7012-0M206_ | neutral | 100 pcs |
| cover cap EL O MB | TKEO0010-0M201_ | neutral | 1 pc |
| | TKEO0010-0M206_ | neutral | 100 pcs |
| cover cap EL U | TKEU0010-0M201_ | neutral | 1 pc |
| | TKEU0010-0M206_ | neutral | 100 pcs |
| cover cap W timber | TKWB7010-0M201_ | neutral | 1 pc |
| | TKWB7010-0M206_ | neutral | 100 pcs |

## Sales information

| Si-white-alu | | | |
|---|---|---|---|
| **Description** | **Part number** | **Surface** | **Box quantity** |
| cover cap S | TKSL0020-0M201_ | neutral | 1 pc |
| | TKSL0020-0M206_ | neutral | 100 pcs |
| **special colour** | | | |
| **Description** | **Part number** | **Surface** | **Box quantity** |
| cover cap FEB rh. | TKFE7011-LV001_ | lacquered | 1 pc |
| cover cap FEB lh. | TKFE7012-LV001_ | lacquered | 1 pc |
| cover cap EL O MB | TKEO0010-LV001_ | lacquered | 1 pc |
| cover cap EL U | TKEU0010-LV001_ | lacquered | 1 pc |
| cover cap W timber | TKWB7010-LV001_ | lacquered | 1 pc |
| cover cap S | TKSL0020-LV001_ | lacquered | 1 pc |

| Description | Material | Page |
|---|---|---|
| window frame clearance 12 mm-timber | | 1.3 - 4 |
| window frame clearance 4 mm-timber | | 1.3 - 5 |
| rebate corner hinge H | TBFE8401, TBFE8402, TBFE8411, TBFE8412, TBFE8431, TBFE8432, TBFE8441, TBFE8442, TKFE7011, TKFE7012 | 1.3 - 6 |
| rebate corner hinge ON H | TBFE8101, TBFE8102, TBFE8111, TBFE8112, TKFE7011, TKFE7012 | 1.3 - 8 |
| reb. corner hinge H A0245 ON | TBFE8151, TBFE8152, TKFE7011, TKFE7012 | 1.3 - 10 |
| rebate corner hinge H 16/2 | TBFE8241, TBFE8242, TBFE8201, TBFE8202, TBFE8221, TBFE8222, TBFE8211, TBFE8212, TBFE8231, TBFE8232, TKFE7011, TKFE7012 | 1.3 - 11 |
| rebate cor. hinge H A0245 16/2 | TBFE8301, TBFE8302, TBFE8321, TBFE8322, TBFE8311, TBFE8312, TBFE8331, TBFE8332, TKFE7011, TKFE7012 | 1.3 - 13 |
| rebate cor.hinge A0175 H | 700273, 700396, 862780, 894019, 894026, 861929, FFDS0011, FFDS0012, FKFE0011, FKFE0012 | 1.3 - 15 |
| rebate cor.hinge A0175 H | FBFE0051, FBFE0052, 716397, 716403, FKFE0011, FKFE0012 | 1.3 - 17 |
| bottom hinge H-12/... | FBEL0010, FBEL0020, TBLB0010, 700617, 700624, FKEO0010, FKEU0010, FKEL0010 | 1.3 - 19 |
| bottom hinge H-12/... | FBEL0071, FBEL0072, 700457, 700549, 720608, 720615, FBEL0311, FBEL0312, TBLB0010, FKEO0010, FKEU0010, FKEL0010 | 1.3 - 21 |
| bottom hinge RFA H-12/.. | 700488, 700570, FBEL0031, FBEL0032, FKEU0010 | 1.3 - 23 |
| bottom hinge H-4/15 | FBEL0010, FBEL0020, TBLB0010, 700631, FKEO0010, FKEU0010, FKEL0010 | 1.3 - 25 |
| bottom hinge H-4/18 | 700495, 700587, 700501, 700594, TBLB0010, FKEO0010, FKEU0010, FKEL0010 | 1.3 - 27 |
| bottom hinge H-4/18-13 | FBEL0201, FBEL0202, FBEL0211, FBEL0212, FBEL0161, FBEL0162, TBLB0010, FKEO0010, FKEU0010, FKEL0010 | 1.3 - 29 |

| Description | Material | Page |
|---|---|---|
| bottom hinge H-4/18 AF | 700464, 700556, 700471, 700563, TBLB0010, FKEO0010, FKEU0010, FKEL0010 | 1.3 - 31 |
| bottom hinge H-4/18-13 AF | FBEL0321, FBEL0322, FBEL0331, FBEL0332, FBEL0261, FBEL0262, FBEL0271, FBEL0272, TBLB0010, FKEO0010, FKEU0010, FKEL0010 | 1.3 - 33 |
| stay hinge DH timber | TBWB0010, TBWB0020, TBWB0030, TBWB0040, TBWB0060, FKWB0020 | 1.3 - 35 |
| stay hinge DH H A0231 | TBWB0120, TBWB0130, TBWB0140, TBWB0160, TBWB0170, FKWB0020 | 1.3 - 36 |
| stay hinge RFA DH timber | TBWB0070, FKWB0010 | 1.3 - 37 |
| stay hinge RFA DH H A0231 | TBWB0090, TBWB0080, TBWB0110, FKWB0010 | 1.3 - 39 |
| stay hinge SF DH timber | TBWS0020, TBWS0030, TBWS0040, TBWS0050, FKWB0020 | 1.3 - 41 |
| top hinge DH H-12/.. | FBSL0100, 704219, FBSB0010, FKSL0010 | 1.3 - 42 |
| top hinge RFA DH H-12/.. | 704233, FBSL0020, FBSB0010, FKSL0050 | 1.3 - 43 |
| top hinge DH H-4/15 | 704240, FBSB0010, FKSL0010 | 1.3 - 45 |
| top hinge DH H-4/18 | 704226, FBSL0150, FBSL0130, FBSB0010, FKSL0010 | 1.3 - 46 |
| top hinge DH H-4/18 AF | 704301, 704318, FBSL0231, FBSL0232, FBSL0321, FBSL0322, FBSB0010, FKSL0010 | 1.3 - 48 |
| bag FAVORIT-RB H-12/.. | 700013, 700020, FKSL0030, FKWB0031, FKWB0032 | 1.3 - 50 |
| bag FAVORIT-RB H-4/15 | 700037, FKSL0030, FKWB0031, FKWB0032 | 1.3 - 52 |
| sash hinge H.. | 700099, 700778, 722312, 700785, FBFB0010, FKWB0020 | 1.3 - 54 |
| sash hinge H ON | 700105, 700792, 700808, FKWB0020 | 1.3 - 55 |
| tilt sash hinge H.. | 700082, 700754, 700761, 722404, FBKF0010, FKWB0020 | 1.3 - 56 |
| tilt sash hinge RFA H-12.. | 717745, 717752, FBKF0060, FBKF0040, FKWB0010 | 1.3 - 57 |
| turn only hinge RB H | FBDF0040, FBDF0050, FBDF0010 | 1.3 - 59 |
| turn only hinge H timber | TBDF0010, TKDF0010, TKWB0010 | 1.3 - 60 |

| Description | Material | Page |
|---|---|---|
| pivot hinge H | FBEL0400, FBEL0410, FBFB0041, FBFB0042, FBFB0051, FBFB0052, FKDZ0010 | 1.3 - 62 |
| security plate | ZSFP0010, ZSFP0020 | 1.3 - 66 |
| cover caps Si-line H | TKFE7011, TKFE7012, FKFE0011, FKFE0012, FKEO0010, FKEU0010, FKEL0010, FKWB0020, FKWB0010, FKSL0010, FKSL0050, FKWB0031, FKWB0032, FKSL0030 | 1.3 - 67 |

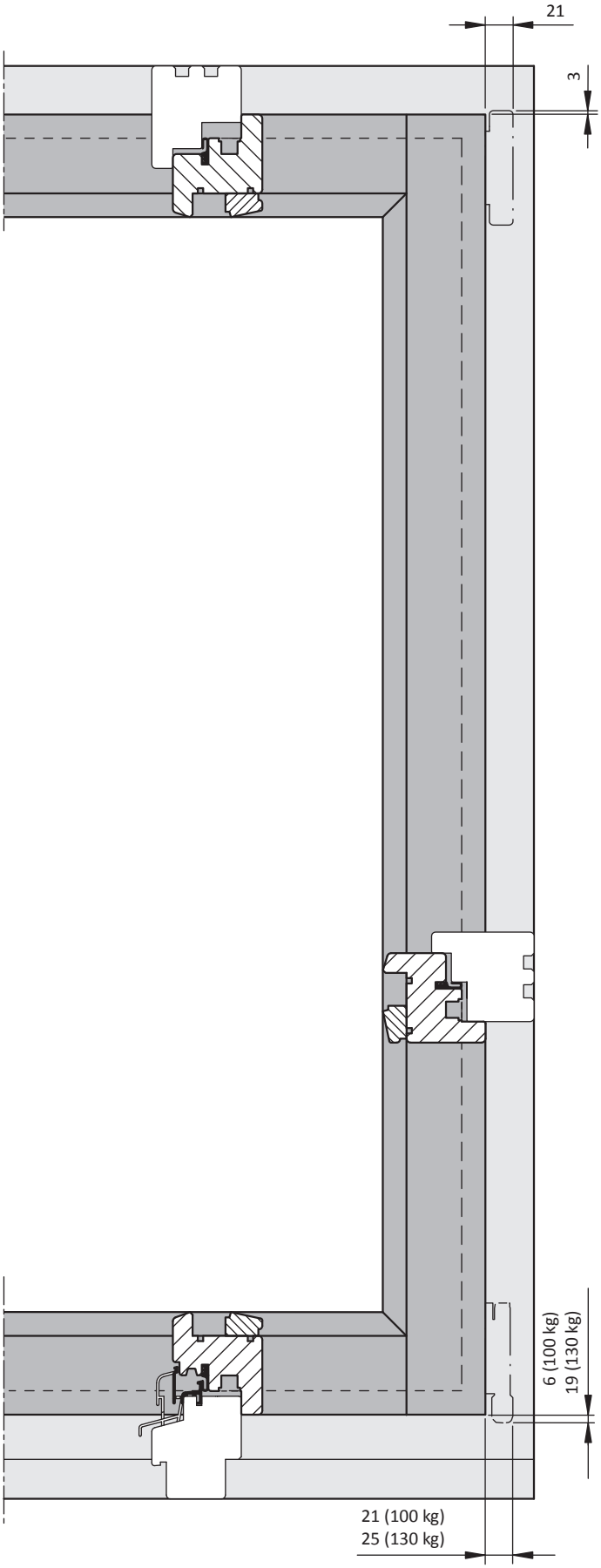
21
3
6 (100 kg)
19 (130 kg)
21 (100 kg)
25 (130 kg)

# Window frame clearance 4-mm timber

(including cover cap)
Hinge side Si-line



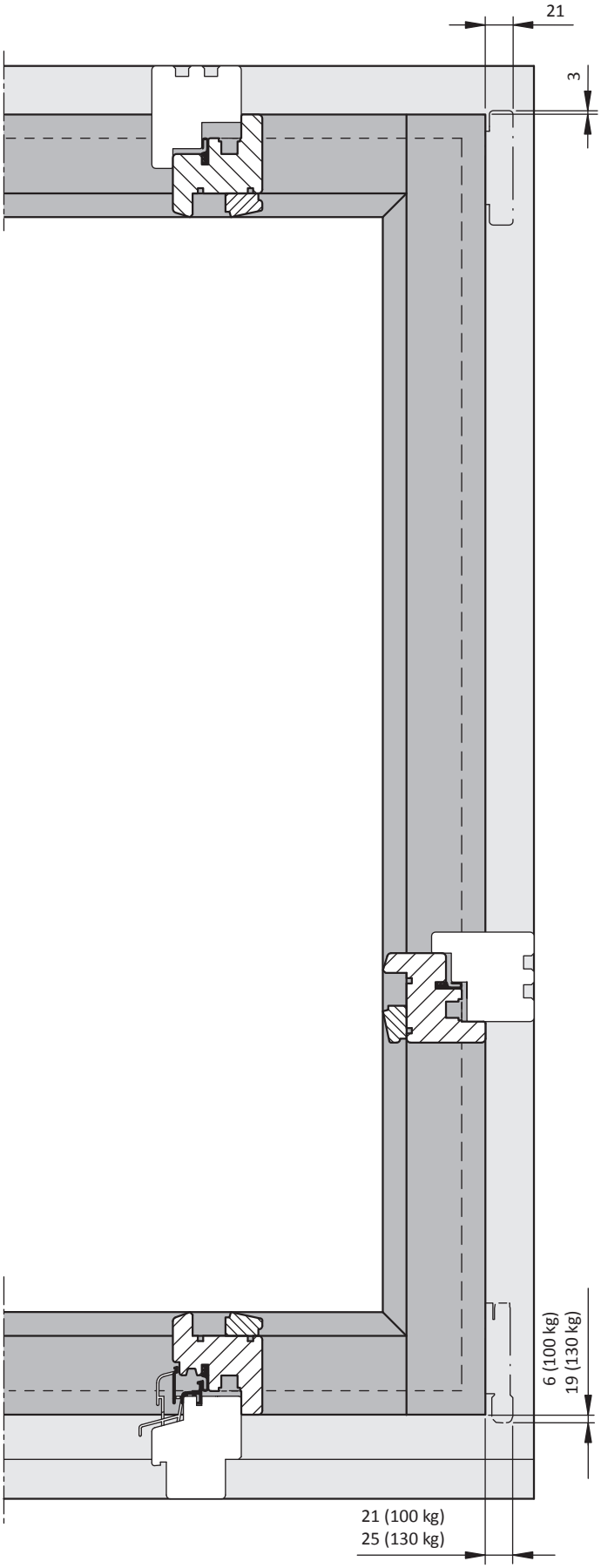

## Technical information

| Part number | Description | Airgap | rebate width | Groove axis | sash weight | |
|---|---|---|---|---|---|---|
| TBFE8401-... | rebate corner hinge timber 18-9 rh. | 12/4 | 18 | 9 | 150 kg | 7 |
| TBFE8402-... | rebate corner hinge timber 18-9 lh. | 12/4 | 18 | 9 | 150 kg | 7 |
| TBFE8411-... | rebate corner hinge timber 18-13 rh. | 12/4 | 18 | 13 | 150 kg | 7 |
| TBFE8412-... | rebate corner hinge timber 18-13 lh. | 12/4 | 18 | 13 | 150 kg | 7 |
| TBFE8431-... | rebate corner hinge timber 20-13 rh. | 12/4 | 20 | 13 | 150 kg | 7 |
| TBFE8432-... | rebate corner hinge timber 20-13 lh. | 12/4 | 20 | 13 | 150 kg | 7 |
| TBFE8441-... | rebate corner hinge timber 4/15-9 rh. | 4 | 15 | 9 | 150 kg | 7 |
| TBFE8442-... | rebate corner hinge timber 4/15-9 lh. | 4 | 15 | 9 | 150 kg | 7 |
| TKFE7011-... | cover cap FEB rh. | - | - | - | - | - |
| TKFE7012-... | cover cap FEB lh. | - | - | - | - | - |

- When assembling the rebate corner hinges TITAN, the rebate height must be min. 15 mm
- For alternative colours of cover caps, see ‘Cover Caps’ page

- **Please observe:**
  Guidelines/notes on the product and on liability (VHBH directive as well as the other applicable documents listed - directive can be downloaded at www.beschlagindustrie.de/ggsb/richtlinien.asp )
  Specifications from the profile manufacturers/system owners (PVC, light metal) or DIN 68 121 “Wooden profiles for windows and portal doors”

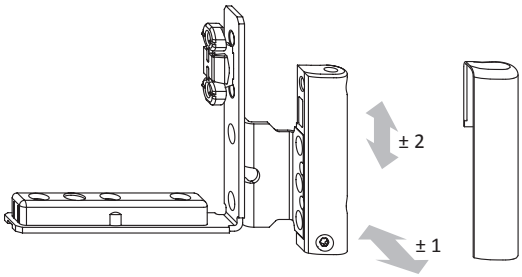


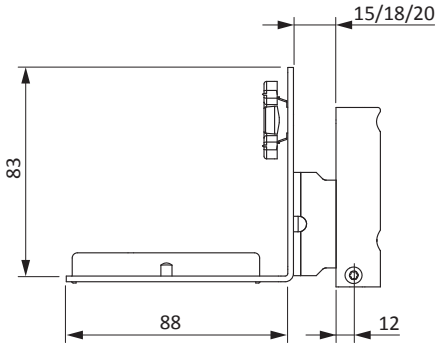

## Sales information

| Description | Part number | Surface | Colour | Box quantity |
|---|---|---|---|---|
| rebate corner hinge timber 18-9 rh. | TBFE8401-10001_ | Titan Silver | without | 1 pc |
| | TBFE8401-10005_ | Titan Silver | without | 50 pcs |
| | TBFE8401-10401_ | Titan Silver | RAL9016 | 1 pc |
| | TBFE8401-10405_ | Titan Silver | RAL9016 | 50 pcs |
| | TBFE8401-1H401_ | Titan Silver | F9 titan m dark | 1 pc |
| | TBFE8401-1H405_ | Titan Silver | F9 titan m dark | 50 pcs |
| rebate corner hinge timber 18-9 lh. | TBFE8402-10001_ | Titan Silver | without | 1 pc |
| | TBFE8402-10005_ | Titan Silver | without | 50 pcs |
| | TBFE8402-10401_ | Titan Silver | RAL9016 | 1 pc |
| | TBFE8402-10405_ | Titan Silver | RAL9016 | 50 pcs |
| | TBFE8402-1H401_ | Titan Silver | F9 titan m dark | 1 pc |
| | TBFE8402-1H405_ | Titan Silver | F9 titan m dark | 50 pcs |
| rebate corner hinge timber 18-13 rh. | TBFE8411-10001_ | Titan Silver | without | 1 pc |
| | TBFE8411-10005_ | Titan Silver | without | 50 pcs |
| | TBFE8411-10401_ | Titan Silver | RAL9016 | 1 pc |
| | TBFE8411-10405_ | Titan Silver | RAL9016 | 50 pcs |
| | TBFE8411-1H401_ | Titan Silver | F9 titan m dark | 1 pc |
| | TBFE8411-1H405_ | Titan Silver | F9 titan m dark | 50 pcs |
| rebate corner hinge timber 18-13 lh. | TBFE8412-10001_ | Titan Silver | without | 1 pc |
| | TBFE8412-10005_ | Titan Silver | without | 50 pcs |
| | TBFE8412-10405_ | Titan Silver | RAL9016 | 50 pcs |
| | TBFE8412-10401_ | Titan Silver | RAL9016 | 50 pcs |
| | TBFE8412-1H401_ | Titan Silver | F9 titan m dark | 1 pc |
| | TBFE8412-1H405_ | Titan Silver | F9 titan m dark | 50 pcs |
| rebate corner hinge timber 20-13 rh. | TBFE8431-10001_ | Titan Silver | without | 1 pc |
| | TBFE8431-10005_ | Titan Silver | without | 50 pcs |
| rebate corner hinge timber 20-13 lh. | TBFE8432-10001_ | Titan Silver | without | 1 pc |
| | TBFE8432-10005_ | Titan Silver | without | 50 pcs |
| rebate corner hinge timber 4/15-9 rh. | TBFE8441-10001_ | Titan Silver | without | 1 pc |
| | TBFE8441-10005_ | Titan Silver | without | 50 pcs |
| | TBFE8441-10405_ | Titan Silver | RAL9016 | 50 pcs |
| rebate corner hinge timber 4/15-9 lh. | TBFE8442-10001_ | Titan Silver | without | 1 pc |
| | TBFE8442-10005_ | Titan Silver | without | 50 pcs |
| | TBFE8442-10405_ | Titan Silver | RAL9016 | 50 pcs |
| cover cap FEB rh. | TKFE7011-00401_ | neutral | RAL9016 | 1 pc |
| | TKFE7011-00406_ | neutral | RAL9016 | 100 pcs |
| | TKFE7011-00408_ | neutral | RAL9016 | 500 pcs |
| cover cap FEB lh. | TKFE7012-00401_ | neutral | RAL9016 | 1 pc |
| | TKFE7012-00406_ | neutral | RAL9016 | 100 pcs |
| | TKFE7012-00408_ | neutral | RAL9016 | 500 pcs |

## Technical information

| Part number | Description | Airgap | rebate width | sash weight | |
|---|---|---|---|---|---|
| TBFE8101-... | reb. corn. hinge ON H 18-.. rh. | 12/4 | 18 | 150 kg | 7 |
| TBFE8102-... | reb. corn. hinge ON H 18-.. lh. | 12/4 | 18 | 150 kg | 7 |
| TBFE8111-... | reb. corn. hinge ON H 20-.. rh. | 12/4 | 20 | 150 kg | 7 |
| TBFE8112-... | reb. corn. hinge ON H 20-.. lh. | 12/4 | 20 | 150 kg | 7 |
| TKFE7011-... | cover cap FEB rh. | - | - | - | - |
| TKFE7012-... | cover cap FEB lh. | - | - | - | - |

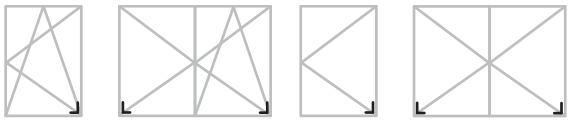

- When assembling the rebate corner hinges TITAN, the rebate height must be min. 15 mm
- For alternative colours of cover caps, see ‘Cover Caps’ page

- **Please observe:**
  Guidelines/notes on the product and on liability (VHBH directive as well as the other applicable documents listed - directive can be downloaded at www.beschlagindustrie.de/ggsb/richtlinien.asp )
  Specifications from the profile manufacturers/system owners (PVC, light metal) or DIN 68 121 “Wooden profiles for windows and portal doors”

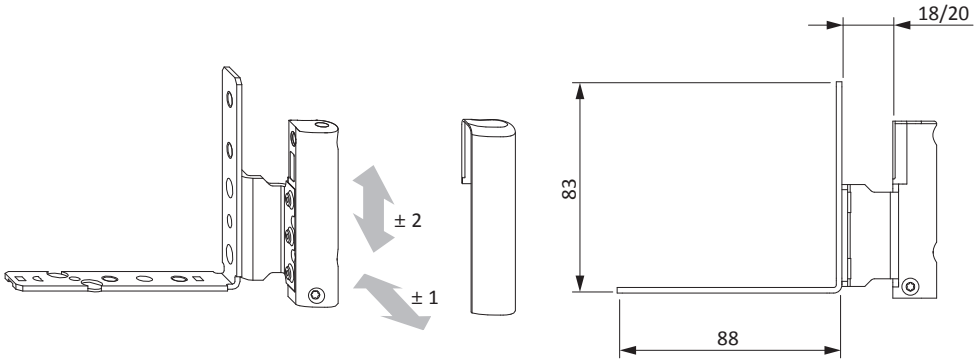

## Sales information

| Description | Part number | Surface | Colour | Box quantity |
|---|---|---|---|---|
| reb. corn. hinge ON H 18-.. rh. | TBFE8101-10001_ | Titan Silver | without | 1 pc |
| | TBFE8101-10005_ | Titan Silver | without | 50 pcs |
| | TBFE8101-10401_ | Titan Silver | RAL9016 | 1 pc |
| | TBFE8101-10405_ | Titan Silver | RAL9016 | 50 pcs |
| reb. corn. hinge ON H 18-.. lh. | TBFE8102-10001_ | Titan Silver | without | 1 pc |
| | TBFE8102-10005_ | Titan Silver | without | 50 pcs |
| | TBFE8102-10401_ | Titan Silver | RAL9016 | 1 pc |
| | TBFE8102-10405_ | Titan Silver | RAL9016 | 50 pcs |
| reb. corn. hinge ON H 20-.. rh. | TBFE8111-10001_ | Titan Silver | without | 1 pc |
| | TBFE8111-10005_ | Titan Silver | without | 50 pcs |
| | TBFE8111-10401_ | Titan Silver | RAL9016 | 1 pc |
| | TBFE8111-10405_ | Titan Silver | RAL9016 | 50 pcs |
| reb. corn. hinge ON H 20-.. lh. | TBFE8112-10001_ | Titan Silver | without | 1 pc |
| | TBFE8112-10005_ | Titan Silver | without | 50 pcs |
| | TBFE8112-10401_ | Titan Silver | RAL9016 | 1 pc |
| | TBFE8112-10405_ | Titan Silver | RAL9016 | 50 pcs |
| cover cap FEB rh. | TKFE7011-00401_ | neutral | RAL9016 | 1 pc |
| | TKFE7011-00406_ | neutral | RAL9016 | 100 pcs |
| | TKFE7011-00408_ | neutral | RAL9016 | 500 pcs |
| cover cap FEB lh. | TKFE7012-00401_ | neutral | RAL9016 | 1 pc |
| | TKFE7012-00406_ | neutral | RAL9016 | 100 pcs |
| | TKFE7012-00408_ | neutral | RAL9016 | 500 pcs |

## Technical information

| Part number | Description | Airgap | rebate width | Groove axis | sash weight | |
|---|---|---|---|---|---|---|
| TBFE8241-... | reb. corn. hinge 16/2 H 4/15-9 rh. | 4 | 15 | 9 | 150 kg | 7 |
| TBFE8242-... | reb. corn. hinge 16/2 H 4/15-9 lh. | 4 | 15 | 9 | 150 kg | 7 |
| TBFE8201-... | reb. corn. hinge 16/2 H 18-9 rh. | 12/4 | 18 | 9 | 150 kg | 7 |
| TBFE8202-... | reb. corn. hinge 16/2 H 18-9 lh. | 12/4 | 18 | 9 | 150 kg | 7 |
| TBFE8221-... | reb. corn. hinge 16/2 H 20-9 rh. | 12/4 | 20 | 9 | 150 kg | 7 |
| TBFE8222-... | reb. corn. hinge 16/2 H 20-9 lh. | 12/4 | 20 | 9 | 150 kg | 7 |
| TBFE8211-... | reb. corn. hinge 16/2 H 18-13 rh. | 12/4 | 18 | 13 | 150 kg | 7 |
| TBFE8212-... | reb. corn. hinge 16/2 H 18-13 lh. | 12/4 | 18 | 13 | 150 kg | 7 |
| TBFE8231-... | reb. corn. hinge 16/2 H 20-13 rh. | 12/4 | 20 | 13 | 150 kg | 7 |
| TBFE8232-... | reb. corn. hinge 16/2 H 20-13 lh. | 12/4 | 20 | 13 | 150 kg | 7 |
| TKFE7011-... | cover cap FEB rh. | - | - | - | - | - |
| TKFE7012-... | cover cap FEB lh. | - | - | - | - | - |

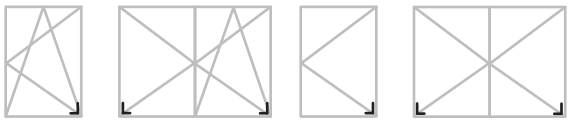

- For fitting groove 16 x 2 mm
- When assembling the rebate corner hinges TITAN, the rebate height must be min. 15 mm
- For alternative colours of cover caps, see ‘Cover Caps’ page

- **Please observe:**
  Guidelines/notes on the product and on liability (VHBH directive as well as the other applicable documents listed - directive can be downloaded at www.beschlagindustrie.de/ggsb/richtlinien.asp )
  Specifications from the profile manufacturers/system owners (PVC, light metal) or DIN 68 121 “Wooden profiles for windows and portal doors”

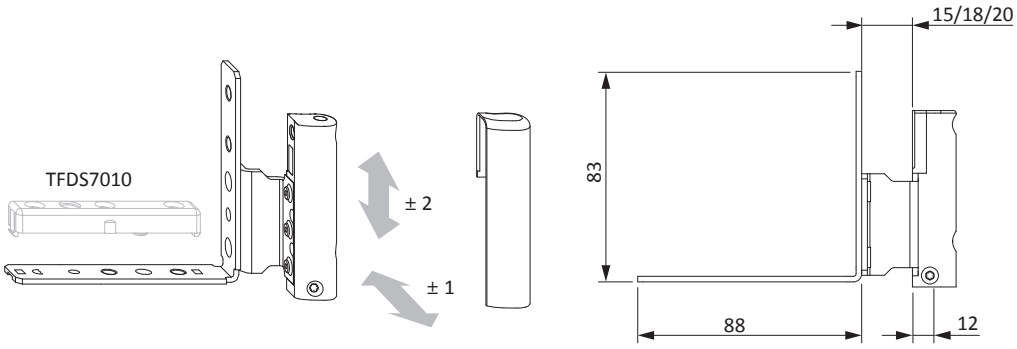

## Sales information

| Description | Part number | Surface | Colour | Box quantity |
|---|---|---|---|---|
| reb. corn. hinge 16/2 H 4/15-9 rh. | TBFE8241-10001_ | Titan Silver | without | 1 pc |
| | TBFE8241-10005_ | Titan Silver | without | 50 pcs |
| | TBFE8241-10401_ | Titan Silver | RAL9016 | 1 pc |
| | TBFE8241-10405_ | Titan Silver | RAL9016 | 50 pcs |
| reb. corn. hinge 16/2 H 4/15-9 lh. | TBFE8242-10001_ | Titan Silver | without | 1 pc |
| | TBFE8242-10005_ | Titan Silver | without | 50 pcs |
| | TBFE8242-10401_ | Titan Silver | RAL9016 | 1 pc |
| | TBFE8242-10405_ | Titan Silver | RAL9016 | 50 pcs |
| reb. corn. hinge 16/2 H 18-9 rh. | TBFE8201-10001_ | Titan Silver | without | 1 pc |
| | TBFE8201-10005_ | Titan Silver | without | 50 pcs |
| | TBFE8201-10401_ | Titan Silver | RAL9016 | 1 pc |
| | TBFE8201-10405_ | Titan Silver | RAL9016 | 50 pcs |
| reb. corn. hinge 16/2 H 18-9 lh. | TBFE8202-10001_ | Titan Silver | without | 1 pc |
| | TBFE8202-10005_ | Titan Silver | without | 50 pcs |
| | TBFE8202-10401_ | Titan Silver | RAL9016 | 1 pc |
| | TBFE8202-10405_ | Titan Silver | RAL9016 | 50 pcs |
| reb. corn. hinge 16/2 H 20-9 rh. | TBFE8221-10001_ | Titan Silver | without | 1 pc |
| | TBFE8221-10005_ | Titan Silver | without | 50 pcs |
| | TBFE8221-10401_ | Titan Silver | RAL9016 | 1 pc |
| | TBFE8221-10405_ | Titan Silver | RAL9016 | 50 pcs |
| reb. corn. hinge 16/2 H 20-9 lh. | TBFE8222-10001_ | Titan Silver | without | 1 pc |
| | TBFE8222-10005_ | Titan Silver | without | 50 pcs |
| | TBFE8222-10401_ | Titan Silver | RAL9016 | 1 pc |
| | TBFE8222-10405_ | Titan Silver | RAL9016 | 50 pcs |
| reb. corn. hinge 16/2 H 18-13 rh. | TBFE8211-10001_ | Titan Silver | without | 1 pc |
| | TBFE8211-10005_ | Titan Silver | without | 50 pcs |
| | TBFE8211-10401_ | Titan Silver | RAL9016 | 1 pc |
| | TBFE8211-10405_ | Titan Silver | RAL9016 | 50 pcs |
| reb. corn. hinge 16/2 H 18-13 lh. | TBFE8212-10001_ | Titan Silver | without | 1 pc |
| | TBFE8212-10005_ | Titan Silver | without | 50 pcs |
| | TBFE8212-10401_ | Titan Silver | RAL9016 | 1 pc |
| | TBFE8212-10405_ | Titan Silver | RAL9016 | 50 pcs |
| reb. corn. hinge 16/2 H 20-13 rh. | TBFE8231-10001_ | Titan Silver | without | 1 pc |
| | TBFE8231-10005_ | Titan Silver | without | 50 pcs |
| | TBFE8231-10401_ | Titan Silver | RAL9016 | 1 pc |
| | TBFE8231-10405_ | Titan Silver | RAL9016 | 50 pcs |
| reb. corn. hinge 16/2 H 20-13 lh. | TBFE8232-10001_ | Titan Silver | without | 1 pc |
| | TBFE8232-10005_ | Titan Silver | without | 50 pcs |
| | TBFE8232-10401_ | Titan Silver | RAL9016 | 1 pc |
| | TBFE8232-10405_ | Titan Silver | RAL9016 | 50 pcs |
| cover cap FEB rh. | TKFE7011-00401_ | neutral | RAL9016 | 1 pc |
| | TKFE7011-00406_ | neutral | RAL9016 | 100 pcs |
| | TKFE7011-00408_ | neutral | RAL9016 | 500 pcs |
| cover cap FEB lh. | TKFE7012-00401_ | neutral | RAL9016 | 1 pc |
| | TKFE7012-00406_ | neutral | RAL9016 | 100 pcs |
| | TKFE7012-00408_ | neutral | RAL9016 | 500 pcs |

1.3

## Technical information

| Part number | Description | Airgap | rebate width | sash weight | |
|---|---|---|---|---|---|
| TBFE8151-... | reb. corn. hinge ON H 18-.. A0245 rh. | 12/4 | 18 | 150 kg | 7 |
| TBFE8152-... | reb. corn. hinge ON H 18-.. A0245 lh. | 12/4 | 18 | 150 kg | 7 |
| TKFE7011-... | cover cap FEB rh. | - | - | - | - |
| TKFE7012-... | cover cap FEB lh. | - | - | - | - |

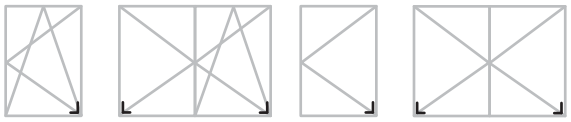

- Suitable for use with threshold
- Hinge knuckle set 20 mm higher
- When assembling the rebate corner hinges TITAN, the rebate height must be min. 15 mm
- For alternative colours of cover caps, see ‘Cover Caps’ page

- **Please observe:**
  Guidelines/notes on the product and on liability (VHBH directive as well as the other applicable documents listed - directive can be downloaded at www.beschlagindustrie.de/ggsb/richtlinien.asp )
  Specifications from the profile manufacturers/system owners (PVC, light metal) or DIN 68 121 “Wooden profiles for windows and portal doors”

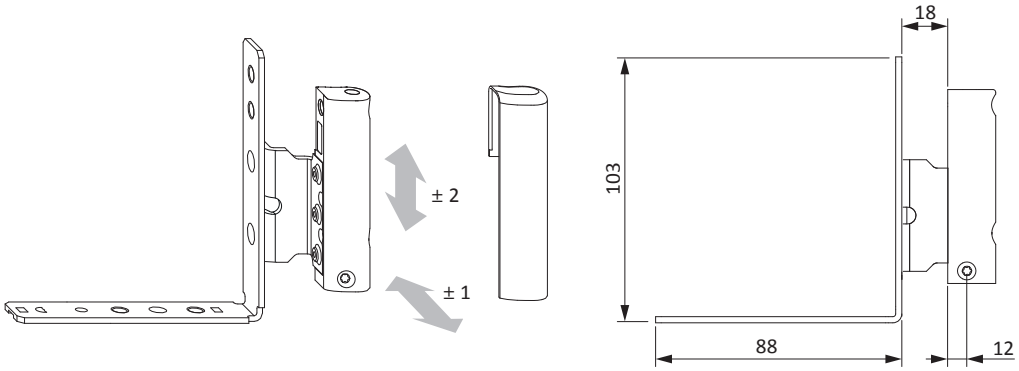


## Sales information

| Description | Part number | Surface | Colour | Box quantity |
|---|---|---|---|---|
| reb. corn. hinge ON H 18-.. A0245 rh. | TBFE8151-10001_ | Titan Silver | without | 1 pc |
| | TBFE8151-10005_ | Titan Silver | without | 50 pcs |
| reb. corn. hinge ON H 18-.. A0245 lh. | TBFE8152-10001_ | Titan Silver | without | 1 pc |
| | TBFE8152-10005_ | Titan Silver | without | 50 pcs |
| cover cap FEB rh. | TKFE7011-00401_ | neutral | RAL9016 | 1 pc |
| | TKFE7011-00406_ | neutral | RAL9016 | 100 pcs |
| | TKFE7011-00408_ | neutral | RAL9016 | 500 pcs |
| cover cap FEB lh. | TKFE7012-00401_ | neutral | RAL9016 | 1 pc |
| | TKFE7012-00406_ | neutral | RAL9016 | 100 pcs |
| | TKFE7012-00408_ | neutral | RAL9016 | 500 pcs |

## Technical information

| Part number | Description | Airgap | rebate width | Groove axis | sash weight | |
|---|---|---|---|---|---|---|
| TBFE8301-... | reb. corn. hinge 16/2 H 18-9 A0245 rh. | 12/4 | 18 | 9 | 150 kg | 7 |
| TBFE8302-... | reb. corn. hinge 16/2 H 18-9 A0245 lh. | 12/4 | 18 | 9 | 150 kg | 7 |
| TBFE8321-... | reb. corn. hinge 16/2 H 20-9 A0245 rh. | 12/4 | 20 | 9 | 150 kg | 7 |
| TBFE8322-... | reb. corn. hinge 16/2 H 20-9 A0245 lh. | 12/4 | 20 | 9 | 150 kg | 7 |
| TBFE8311-... | reb. corn. hinge 16/2 H 18-13 A0245 rh. | 12/4 | 18 | 13 | 150 kg | 7 |
| TBFE8312-... | reb. corn. hinge 16/2 H 18-13 A0245 lh. | 12/4 | 18 | 13 | 150 kg | 7 |
| TBFE8331-... | reb. corn. hinge 16/2 H 20-13 A0245 rh. | 12/4 | 20 | 13 | 150 kg | 7 |
| TBFE8332-... | reb. corn. hinge 16/2 H 20-13 A0245 lh. | 12/4 | 20 | 13 | 150 kg | 7 |
| TKFE7011-... | cover cap FEB rh. | - | - | - | - | - |
| TKFE7012-... | cover cap FEB lh. | - | - | - | - | - |

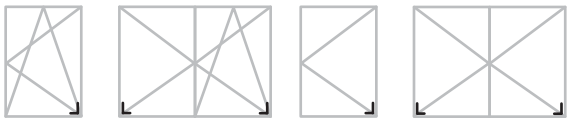

- For fitting groove 16 x 2 mm
- Suitable for use with threshold
- Hinge knuckle set 20 mm higher
- When assembling the rebate corner hinges TITAN, the rebate height must be min. 15 mm
- For alternative colours of cover caps, see ‘Cover Caps’ page

- **Please observe:**
  Guidelines/notes on the product and on liability (VHBH directive as well as the other applicable documents listed - directive can be downloaded at www.beschlagindustrie.de/ggsb/richtlinien.asp )
  Specifications from the profile manufacturers/system owners (PVC, light metal) or DIN 68 121 “Wooden profiles for windows and portal doors”

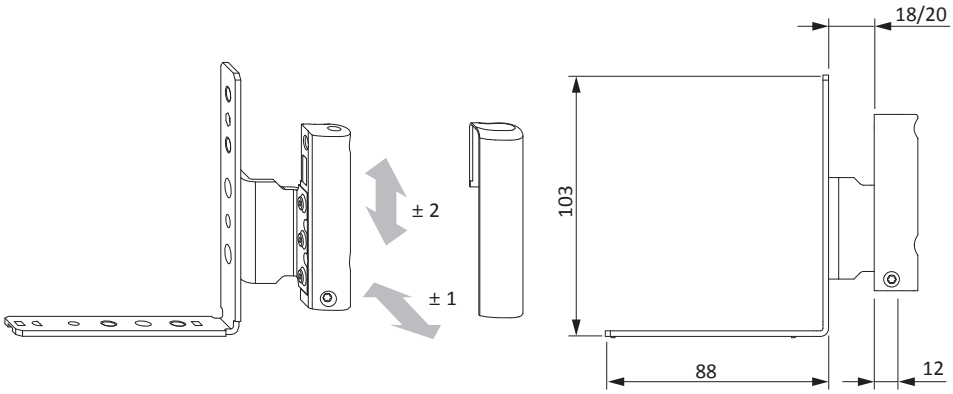

## Sales information

| Description | Part number | Surface | Colour | Box quantity |
|---|---|---|---|---|
| reb. corn. hinge 16/2 H 18-9 A0245 rh. | TBFE8301-10001_ | Titan Silver | without | 1 pc |
| | TBFE8301-10005_ | Titan Silver | without | 50 pcs |
| | TBFE8301-10401_ | Titan Silver | RAL9016 | 1 pc |
| | TBFE8301-10405_ | Titan Silver | RAL9016 | 50 pcs |
| | TBFE8301-1H401_ | Titan Silver | F9 titan m dark | 1 pc |
| | TBFE8301-1H405_ | Titan Silver | F9 titan m dark | 50 pcs |
| reb. corn. hinge 16/2 H 18-9 A0245 lh. | TBFE8302-10001_ | Titan Silver | without | 1 pc |
| | TBFE8302-10005_ | Titan Silver | without | 50 pcs |
| | TBFE8302-10401_ | Titan Silver | RAL9016 | 1 pc |
| | TBFE8302-10405_ | Titan Silver | RAL9016 | 50 pcs |
| | TBFE8302-1H401_ | Titan Silver | F9 titan m dark | 1 pc |
| | TBFE8302-1H405_ | Titan Silver | F9 titan m dark | 50 pcs |
| reb. corn. hinge 16/2 H 20-9 A0245 rh. | TBFE8321-10001_ | Titan Silver | without | 1 pc |
| | TBFE8321-10005_ | Titan Silver | without | 50 pcs |
| | TBFE8321-10401_ | Titan Silver | RAL9016 | 1 pc |
| | TBFE8321-10405_ | Titan Silver | RAL9016 | 50 pcs |
| reb. corn. hinge 16/2 H 20-9 A0245 lh. | TBFE8322-10001_ | Titan Silver | without | 1 pc |
| | TBFE8322-10005_ | Titan Silver | without | 50 pcs |
| | TBFE8322-10401_ | Titan Silver | RAL9016 | 1 pc |
| | TBFE8322-10405_ | Titan Silver | RAL9016 | 50 pcs |
| reb. corn. hinge 16/2 H 18-13 A0245 rh. | TBFE8311-10001_ | Titan Silver | without | 1 pc |
| | TBFE8311-10005_ | Titan Silver | without | 50 pcs |
| | TBFE8311-10401_ | Titan Silver | RAL9016 | 1 pc |
| | TBFE8311-10405_ | Titan Silver | RAL9016 | 50 pcs |
| | TBFE8311-1H401_ | Titan Silver | F9 titan m dark | 1 pc |
| | TBFE8311-1H405_ | Titan Silver | F9 titan m dark | 50 pcs |
| reb. corn. hinge 16/2 H 18-13 A0245 lh. | TBFE8312-10001_ | Titan Silver | without | 1 pc |
| | TBFE8312-10005_ | Titan Silver | without | 50 pcs |
| | TBFE8312-10401_ | Titan Silver | RAL9016 | 1 pc |
| | TBFE8312-10405_ | Titan Silver | RAL9016 | 50 pcs |
| | TBFE8312-1H401_ | Titan Silver | F9 titan m dark | 1 pc |
| | TBFE8312-1H405_ | Titan Silver | F9 titan m dark | 50 pcs |
| reb. corn. hinge 16/2 H 20-13 A0245 rh. | TBFE8331-10001_ | Titan Silver | without | 1 pc |
| | TBFE8331-10005_ | Titan Silver | without | 50 pcs |
| | TBFE8331-10401_ | Titan Silver | RAL9016 | 1 pc |
| | TBFE8331-10405_ | Titan Silver | RAL9016 | 50 pcs |
| reb. corn. hinge 16/2 H 20-13 A0245 lh. | TBFE8332-10001_ | Titan Silver | without | 1 pc |
| | TBFE8332-10005_ | Titan Silver | without | 50 pcs |
| | TBFE8332-10401_ | Titan Silver | RAL9016 | 1 pc |
| | TBFE8332-10405_ | Titan Silver | RAL9016 | 50 pcs |
| cover cap FEB rh. | TKFE7011-00401_ | neutral | RAL9016 | 1 pc |
| | TKFE7011-00406_ | neutral | RAL9016 | 100 pcs |
| | TKFE7011-00408_ | neutral | RAL9016 | 500 pcs |
| cover cap FEB lh. | TKFE7012-00401_ | neutral | RAL9016 | 1 pc |
| | TKFE7012-00406_ | neutral | RAL9016 | 100 pcs |
| | TKFE7012-00408_ | neutral | RAL9016 | 500 pcs |

## Technical information

| Part number | Description | Airgap | rebate width | Groove axis | sash weight | |
|---|---|---|---|---|---|---|
| TBFE0021-... | rebate corner hinge timber 12/18-9 A0175 rh. | 12 | 18 | 9 | 130 kg | 6 |
| TBFE0022-... | rebate corner hinge timber 12/18-9 A0175 lh. | 12 | 18 | 9 | 130 kg | 6 |
| 862780 | dist pce with groove H 12/18-9 | 12 | 18 | 9 | - | - |
| 894019 | dist pce with groove H 12/18-13 rh. | 12 | 18 | 13 | - | - |
| 894026 | dist pce with groove H 12/18-13 lh. | 12 | 18 | 13 | - | - |
| 861929 | dist pce with groove H 12/20-9 | 12 | 20 | 9 | - | - |
| FFDS0011-... | dist pce with groove H 12/20-13 rh. | 12 | 20 | 13 | - | - |
| FFDS0012-... | dist pce with groove H 12/20-13 lh. | 12 | 20 | 13 | - | - |
| FKFE0011-... | cover cap FEB rh. | - | - | - | - | - |
| FKFE0012-... | cover cap FEB lh. | - | - | - | - | - |



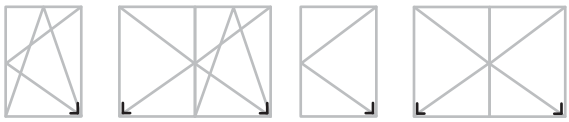

- Hinge clearance in the over rebate
- Always route through when using vertical and horizontal hardware groove spacers
- For alternative colours of cover caps, see ‘Cover Caps’ page

- **Please observe:**
  Guidelines/notes on the product and on liability (VHBH directive as well as the other applicable documents listed - directive can be downloaded at www.beschlagindustrie.de/ggsb/richtlinien.asp )
  Specifications from the profile manufacturers/system owners (PVC, light metal) or DIN 68 121 “Wooden profiles for windows and portal doors”

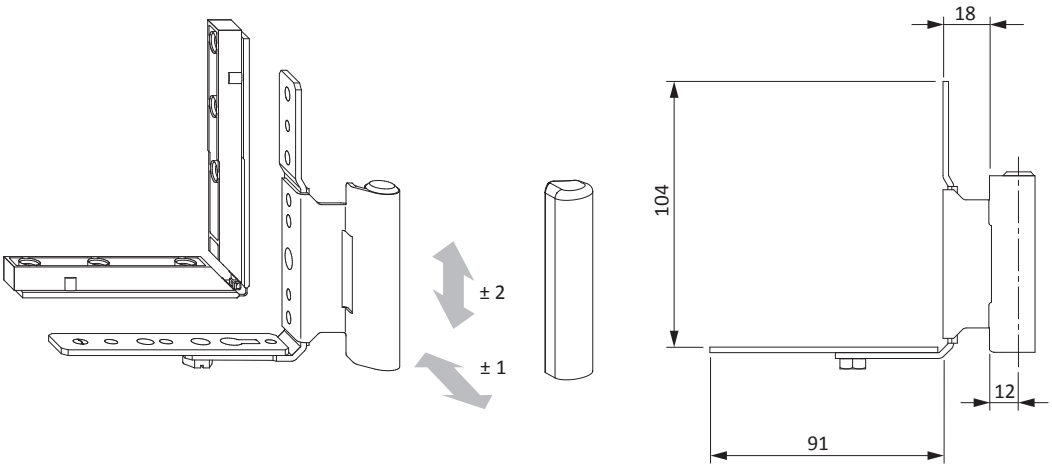

## Sales information

| Description | Part number | Surface | Colour | Box quantity |
|---|---|---|---|---|
| rebate corner hinge timber 12/18-9 A0175 rh. | TBFE0021-10001_ | Titan Silver | without | 1 pc |
| | TBFE0021-10005_ | Titan Silver | without | 50 pcs |
| rebate corner hinge timber 12/18-9 A0175 lh. | TBFE0022-10001_ | Titan Silver | without | 1 pc |
| | TBFE0022-10005_ | Titan Silver | without | 50 pcs |
| dist pce with groove H 12/18-9 | 862780 | neutral | RAL1020 | 1 pc |
| | 250631 | neutral | RAL1020 | 250 pcs |
| dist pce with groove H 12/18-13 rh. | 894019 | neutral | silver | 1 pc |
| | 303320 | neutral | silver | 250 pcs |
| dist pce with groove H 12/18-13 lh. | 894026 | neutral | silver | 1 pc |
| | 303337 | neutral | silver | 250 pcs |
| dist pce with groove H 12/20-9 | 861929 | neutral | RAL1020 | 1 pc |
| | 249833 | neutral | RAL1020 | 250 pcs |
| dist pce with groove H 12/20-13 rh. | FFDS0011-02501_ | neutral | Si-silver | 1 pc |
| | FFDS0011-02507_ | neutral | Si-silver | 250 pcs |
| dist pce with groove H 12/20-13 lh. | FFDS0012-02501_ | neutral | Si-silver | 1 pc |
| | FFDS0012-02507_ | neutral | Si-silver | 250 pcs |
| cover cap FEB rh. | FKFE0011-00401_ | neutral | RAL9016 | 1 pc |
| | FKFE0011-00408_ | neutral | RAL9016 | 500 pcs |
| | FKFE0011-L2501_ | lacquered | Si-silver | 1 pc |
| | FKFE0011-L2506_ | lacquered | Si-silver | 100 pcs |
| | FKFE0011-L2508_ | lacquered | Si-silver | 500 pcs |
| cover cap FEB lh. | FKFE0012-00401_ | neutral | RAL9016 | 1 pc |
| | FKFE0012-00408_ | neutral | RAL9016 | 500 pcs |
| | FKFE0012-L2501_ | lacquered | Si-silver | 1 pc |
| | FKFE0012-L2506_ | lacquered | Si-silver | 100 pcs |
| | FKFE0012-L2508_ | lacquered | Si-silver | 500 pcs |

## Drill holes and routings

- Sash over rebate routing

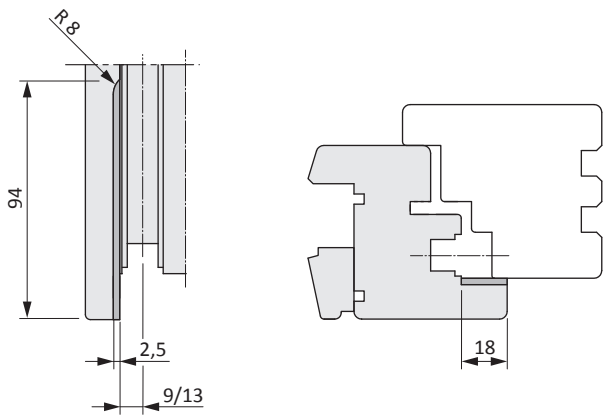

## Technical information

| Part number | Description | Airgap | rebate width | Groove axis | sash weight | |
|---|---|---|---|---|---|---|
| TBFE0061-... | rebate corner hinge timber 12/20-9 A0175 rh. | 12 | 20 | 9 | 130 kg | 6 |
| TBFE0062-... | rebate corner hinge timber 12/20-9 A0175 lh. | 12 | 20 | 9 | 130 kg | 6 |
| FKFE0011-... | cover cap FEB rh. | - | - | - | - | - |
| FKFE0012-... | cover cap FEB lh. | - | - | - | - | - |



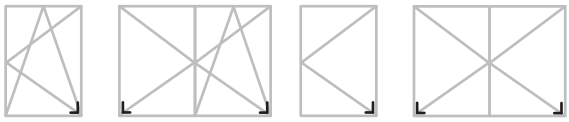

- Hinge clearance in the over rebate
- For alternative colours of cover caps, see ‘Cover Caps’ page

- **Please observe:**
  Guidelines/notes on the product and on liability (VHBH directive as well as the other applicable documents listed - directive can be downloaded at www.beschlagindustrie.de/ggsb/richtlinien.asp )
  Specifications from the profile manufacturers/system owners (PVC, light metal) or DIN 68 121 “Wooden profiles for windows and portal doors”

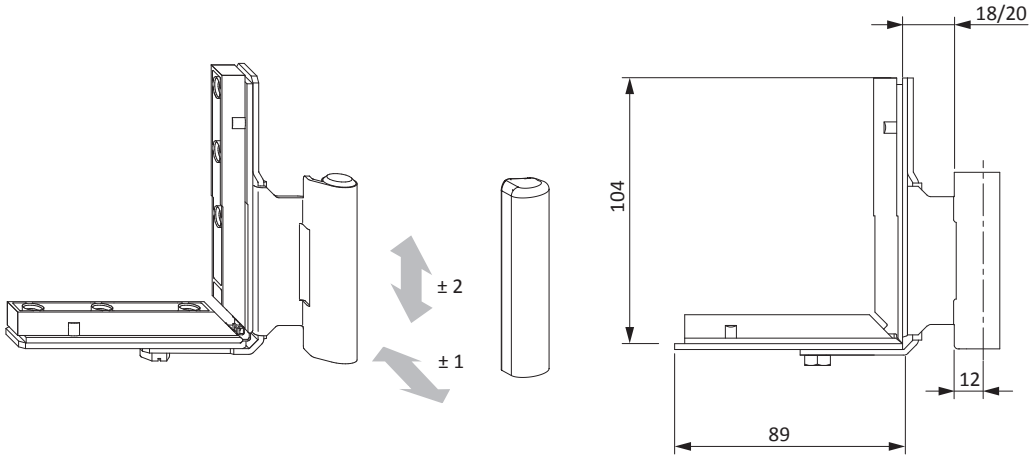


## Sales information

| Description | Part number | Surface | Colour | Box quantity |
|---|---|---|---|---|
| rebate corner hinge timber 12/20-9 A0175 rh. | TBFE0061-10001_ | Titan Silver | without | 1 pc |
| | TBFE0061-10005_ | Titan Silver | without | 50 pcs |
| rebate corner hinge timber 12/20-9 A0175 lh. | TBFE0062-10001_ | Titan Silver | without | 1 pc |
| | TBFE0062-10005_ | Titan Silver | without | 50 pcs |
| cover cap FEB rh. | FKFE0011-00401_ | neutral | RAL9016 | 1 pc |
| | FKFE0011-00408_ | neutral | RAL9016 | 500 pcs |
| cover cap FEB lh. | FKFE0012-00401_ | neutral | RAL9016 | 1 pc |
| | FKFE0012-00408_ | neutral | RAL9016 | 500 pcs |

## Drill holes and routings

- Sash over rebate routing

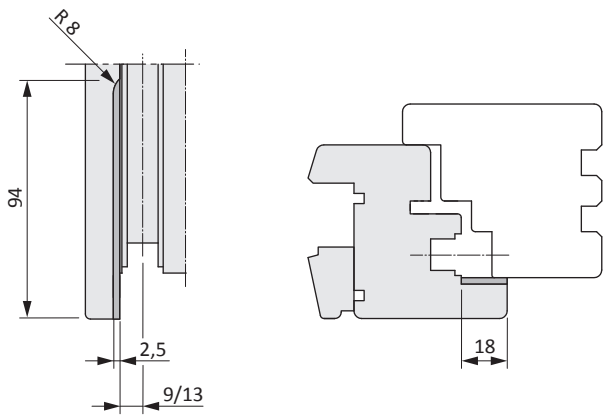

## Technical information

| Part number | Description | Airgap | rebate width | sash weight | |
|---|---|---|---|---|---|
| FBEL0010-... | bottom hinge timber 12/ | 12 | - | 100 kg | 4 |
| FBEL0020-... | bottom hinge S timber 12/ | 12 | - | 130 kg | 5 |
| TBLB0010-... | bottom hinge pin diam.6 | - | - | - | - |
| 700617 | filling piece H 12/18 | 12 | 18 | - | - |
| 700624 | filling piece H 12/20 | 12 | 20 | - | - |
| FKEO0010-... | cover cap EL O | - | - | - | - |
| FKEU0010-... | cover cap EL U | - | - | - | - |
| FKEL0010-... | cover cap EL-S U | - | - | - | - |



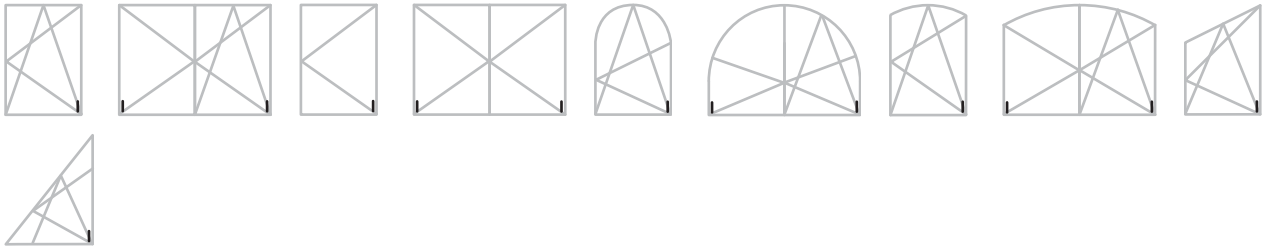

- Jig, refer to PDB, line item FAFSSE
- For alternative colours of cover caps, see ‘Cover Caps’ page

- **Please observe:**
  Guidelines/notes on the product and on liability (VHBH directive as well as the other applicable documents listed - directive can be downloaded at www.beschlagindustrie.de/ggsb/richtlinien.asp )
  Specifications from the profile manufacturers/system owners (PVC, light metal) or DIN 68 121 “Wooden profiles for windows and portal doors”

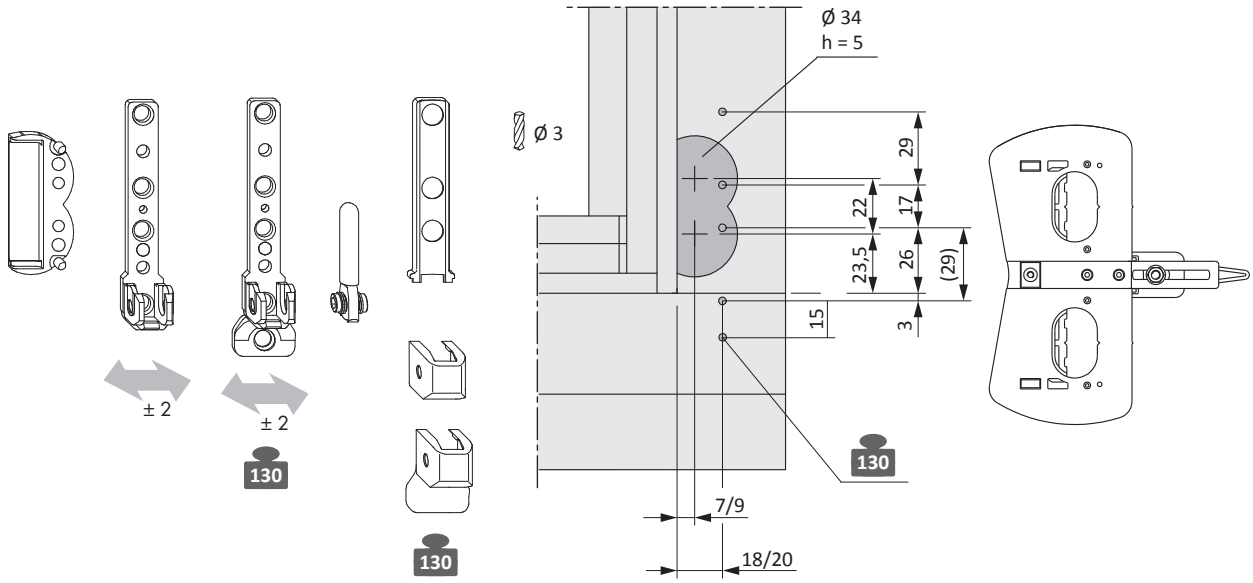

## Sales information

| Description | Part number | Surface | Colour | Box quantity |
|---|---|---|---|---|
| bottom hinge timber 12/ | FBEL0010-10001_ | Titan Silver | without | 1 pc |
| | FBEL0010-10006_ | Titan Silver | without | 100 pcs |
| bottom hinge S timber 12/ | FBEL0020-10001_ | Titan Silver | without | 1 pc |
| | 275665 | Titan Silver | without | 250 pcs |
| bottom hinge pin diam.6 | TBLB0010-10001_ | Titan Silver | without | 1 pc |
| | TBLB0010-10006_ | Titan Silver | without | 100 pcs |
| filling piece H 12/18 | 700617 | Titan Silver | without | 1 pc |
| | 275917 | Titan Silver | without | 500 pcs |
| filling piece H 12/20 | 700624 | Titan Silver | without | 1 pc |
| | 275931 | Titan Silver | without | 500 pcs |
| cover cap EL O | FKEO0010-00401_ | neutral | RAL9016 | 1 pc |
| | FKEO0010-00408_ | neutral | RAL9016 | 500 pcs |
| cover cap EL U | FKEU0010-00401_ | neutral | RAL9016 | 1 pc |
| | FKEU0010-00406_ | neutral | RAL9016 | 100 pcs |
| | FKEU0010-00408_ | neutral | RAL9016 | 500 pcs |
| cover cap EL-S U | FKEL0010-00401_ | neutral | RAL9016 | 1 pc |
| | FKEL0010-00408_ | neutral | RAL9016 | 500 pcs |

## Technical information

| Part number | Description | Airgap | rebate width | sash weight | |
|---|---|---|---|---|---|
| FBEL0071-... | bot.hinge w.fill.piece timb. 12/18 rh. | 12 | 18 | 100 kg | 4 |
| FBEL0072-... | bot.hinge w.fill.piece timb. 12/18 lh. | 12 | 18 | 100 kg | 4 |
| 700457 | bot.hinge w.fill.piece S timb. 12/18 rh. | 12 | 18 | 130 kg | 5 |
| 700549 | bot.hinge w.fill.piece S timb. 12/18 lh. | 12 | 18 | 130 kg | 5 |
| 720608 | bot.hinge w.fill.piece timb. 12/20 rh. | 12 | 20 | 100 kg | 4 |
| 720615 | bot.hinge w.fill.piece timb. 12/20 lh. | 12 | 20 | 100 kg | 4 |
| FBEL0311-... | bot.hinge w.fill.piece S timb. 12/20 rh. | 12 | 20 | 130 kg | 4 |
| FBEL0312-... | bot.hinge w.fill.piece S timb. 12/20 lh. | 12 | 20 | 130 kg | 4 |
| TBLB0010-... | bottom hinge pin diam.6 | - | - | - | - |
| FKEO0010-... | cover cap EL O | - | - | - | - |
| FKEU0010-... | cover cap EL U | - | - | - | - |
| FKEL0010-... | cover cap EL-S U | - | - | - | - |



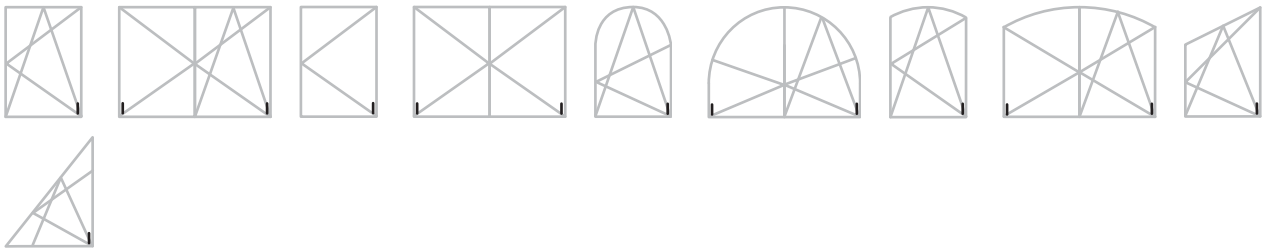

- Jig, refer to PDB, line item FAFSSE
- For alternative colours of cover caps, see ‘Cover Caps’ page

- **Please observe:**
  Guidelines/notes on the product and on liability (VHBH directive as well as the other applicable documents listed - directive can be downloaded at www.beschlagindustrie.de/ggsb/richtlinien.asp )
  Specifications from the profile manufacturers/system owners (PVC, light metal) or DIN 68 121 “Wooden profiles for windows and portal doors”

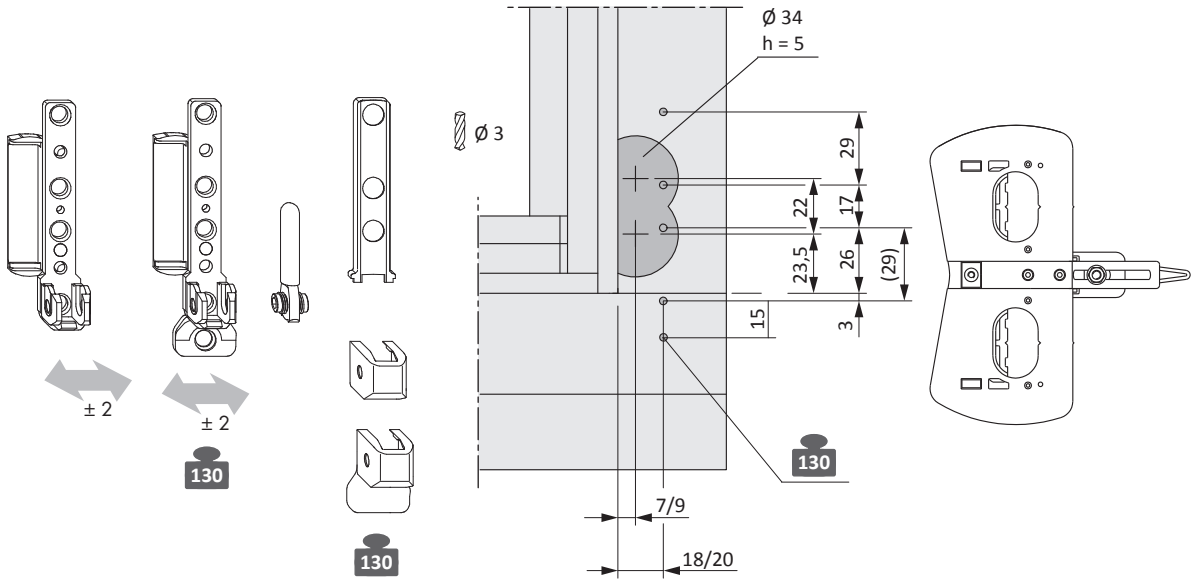

## Sales information

| Description | Part number | Surface | Colour | Box quantity |
|---|---|---|---|---|
| bot.hinge w.fill.piece timb. 12/18 rh. | FBEL0071-10001_ | Titan Silver | without | 1 pc |
| | FBEL0071-10006_ | Titan Silver | without | 100 pcs |
| bot.hinge w.fill.piece timb. 12/18 lh. | FBEL0072-10001_ | Titan Silver | without | 1 pc |
| | FBEL0072-10006_ | Titan Silver | without | 100 pcs |
| bot.hinge w.fill.piece S timb. 12/18 rh. | 700457 | Titan Silver | without | 1 pc |
| | FBEL0081-10006_ | Titan Silver | without | 100 pcs |
| bot.hinge w.fill.piece S timb. 12/18 lh. | 700549 | Titan Silver | without | 1 pc |
| | FBEL0082-10006_ | Titan Silver | without | 100 pcs |
| bot.hinge w.fill.piece timb. 12/20 rh. | 720608 | Titan Silver | without | 1 pc |
| | 311646 | Titan Silver | without | 200 pcs |
| bot.hinge w.fill.piece timb. 12/20 lh. | 720615 | Titan Silver | without | 1 pc |
| | 311653 | Titan Silver | without | 200 pcs |
| bot.hinge w.fill.piece S timb. 12/20 rh. | FBEL0311-10001_ | Titan Silver | without | 1 pc |
| | FBEL0311-10006_ | Titan Silver | without | 100 pcs |
| bot.hinge w.fill.piece S timb. 12/20 lh. | FBEL0312-10001_ | Titan Silver | without | 1 pc |
| | FBEL0312-10006_ | Titan Silver | without | 100 pcs |
| bottom hinge pin diam.6 | TBLB0010-10001_ | Titan Silver | without | 1 pc |
| | TBLB0010-10006_ | Titan Silver | without | 100 pcs |
| cover cap EL O | FKEO0010-00401_ | neutral | RAL9016 | 1 pc |
| | FKEO0010-00408_ | neutral | RAL9016 | 500 pcs |
| cover cap EL U | FKEU0010-00401_ | neutral | RAL9016 | 1 pc |
| | FKEU0010-00406_ | neutral | RAL9016 | 100 pcs |
| | FKEU0010-00408_ | neutral | RAL9016 | 500 pcs |
| cover cap EL-S U | FKEL0010-00401_ | neutral | RAL9016 | 1 pc |
| | FKEL0010-00408_ | neutral | RAL9016 | 500 pcs |

## Technical information

| Part number | Description | Airgap | rebate width | sash weight | |
|---|---|---|---|---|---|
| TBEL0021-... | bottom hinge RFA timber 12/18 A0175 rh. | 12 | 18 | 100 kg | 4 |
| TBEL0022-... | bottom hinge RFA timber 12/18 A0175 lh. | 12 | 18 | 100 kg | 4 |
| TBEL0031-... | bottom hinge RFA timber 12/20 A0175 rh. | 12 | 20 | 100 kg | 4 |
| TBEL0032-... | bottom hinge RFA timber 12/20 A0175 lh. | 12 | 20 | 100 kg | 4 |
| FKEU0010-... | cover cap EL U | - | - | - | - |



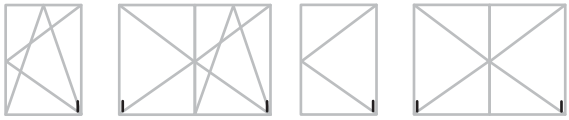

- For jigless frame installation
- Hinge clearance in the over rebate
- For alternative colours of cover caps, see ‘Cover Caps’ page

- **Please observe:**
  Guidelines/notes on the product and on liability (VHBH directive as well as the other applicable documents listed - directive can be downloaded at www.beschlagindustrie.de/ggsb/richtlinien.asp )
  Specifications from the profile manufacturers/system owners (PVC, light metal) or DIN 68 121 “Wooden profiles for windows and portal doors”

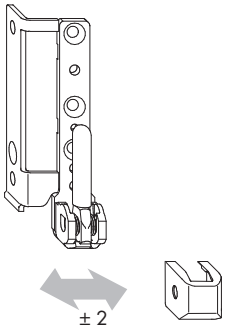


## Sales information

| Description | Part number | Surface | Colour | Box quantity |
|---|---|---|---|---|
| bottom hinge RFA timber 12/18 A0175 rh. | TBEL0021-10001_ | Titan Silver | without | 1 pc |
| | TBEL0021-10005_ | Titan Silver | without | 50 pcs |
| bottom hinge RFA timber 12/18 A0175 lh. | TBEL0022-10001_ | Titan Silver | without | 1 pc |
| | TBEL0022-10005_ | Titan Silver | without | 50 pcs |
| bottom hinge RFA timber 12/20 A0175 rh. | TBEL0031-10001_ | Titan Silver | without | 1 pc |
| | TBEL0031-10005_ | Titan Silver | without | 50 pcs |
| bottom hinge RFA timber 12/20 A0175 lh. | TBEL0032-10001_ | Titan Silver | without | 1 pc |
| | TBEL0032-10005_ | Titan Silver | without | 50 pcs |
| cover cap EL U | FKEU0010-00401_ | neutral | RAL9016 | 1 pc |
| | FKEU0010-00406_ | neutral | RAL9016 | 100 pcs |
| | FKEU0010-00408_ | neutral | RAL9016 | 500 pcs |

## Drill holes and routings

- Sash over rebate routing



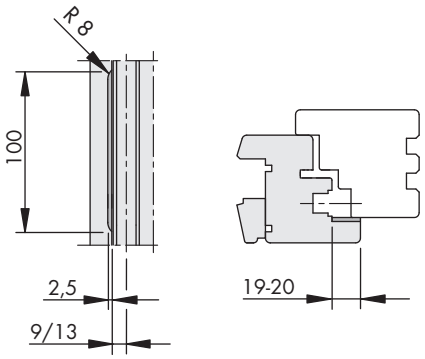

## Technical information

| Part number | Description | Airgap | rebate width | sash weight | |
|---|---|---|---|---|---|
| FBEL0010-... | bottom hinge timber 12/ | 12 | - | 100 kg | 4 |
| FBEL0020-... | bottom hinge S timber 12/ | 12 | - | 130 kg | 5 |
| TBLB0010-... | bottom hinge pin diam.6 | - | - | - | - |
| 700631 | filling piece H 4/15 A0178 | 4 | 15 | - | - |
| FKEO0010-... | cover cap EL O | - | - | - | - |
| FKEU0010-... | cover cap EL U | - | - | - | - |
| FKEL0010-... | cover cap EL-S U | - | - | - | - |



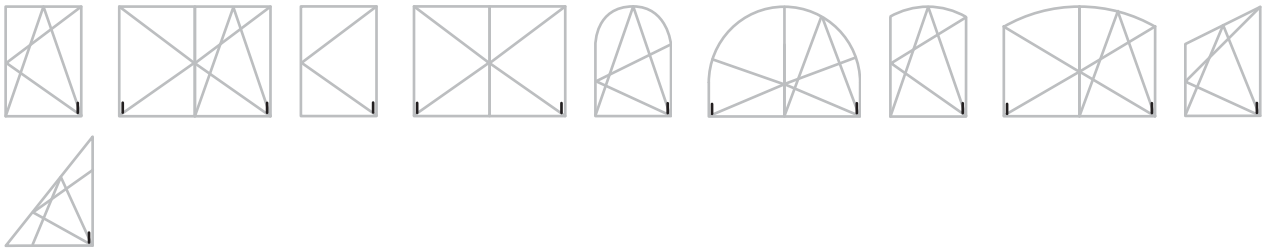

- For alternative colours of cover caps, see ‘Cover Caps’ page

- **Please observe:**
  Guidelines/notes on the product and on liability (VHBH directive as well as the other applicable documents listed - directive can be downloaded at www.beschlagindustrie.de/ggsb/richtlinien.asp )
  Specifications from the profile manufacturers/system owners (PVC, light metal) or DIN 68 121 “Wooden profiles for windows and portal doors”

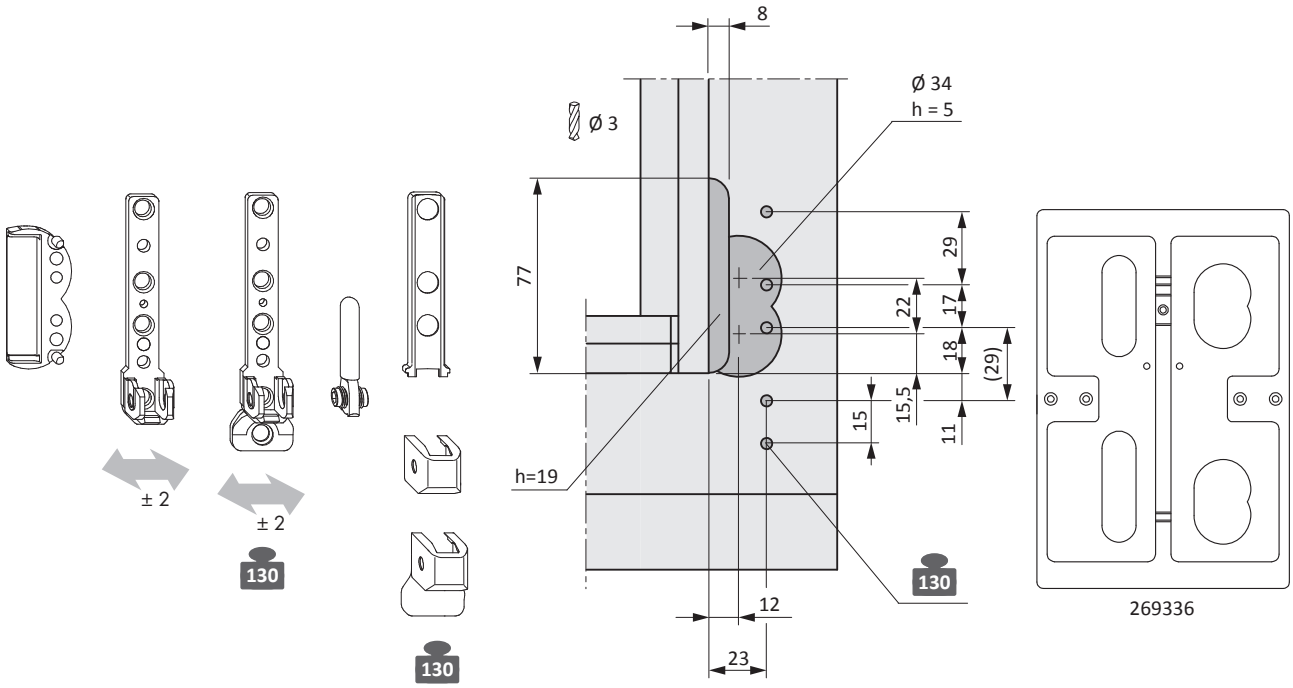

## Sales information

| Description | Part number | Surface | Colour | Box quantity |
|---|---|---|---|---|
| bottom hinge timber 12/ | FBEL0010-10001_ | Titan Silver | without | 1 pc |
| | FBEL0010-10006_ | Titan Silver | without | 100 pcs |
| bottom hinge S timber 12/ | FBEL0020-10001_ | Titan Silver | without | 1 pc |
| | 275665 | Titan Silver | without | 250 pcs |
| bottom hinge pin diam.6 | TBLB0010-10001_ | Titan Silver | without | 1 pc |
| | TBLB0010-10006_ | Titan Silver | without | 100 pcs |
| filling piece H 4/15 A0178 | 700631 | Titan Silver | without | 1 pc |
| | FBFS0030-10006_ | Titan Silver | without | 100 pcs |
| | 275955 | Titan Silver | without | 500 pcs |
| cover cap EL O | FKEO0010-00401_ | neutral | RAL9016 | 1 pc |
| | FKEO0010-00408_ | neutral | RAL9016 | 500 pcs |
| cover cap EL U | FKEU0010-00401_ | neutral | RAL9016 | 1 pc |
| | FKEU0010-00406_ | neutral | RAL9016 | 100 pcs |
| | FKEU0010-00408_ | neutral | RAL9016 | 500 pcs |
| cover cap EL-S U | FKEL0010-00401_ | neutral | RAL9016 | 1 pc |
| | FKEL0010-00408_ | neutral | RAL9016 | 500 pcs |

## Technical information

| Part number | Description | Airgap | rebate width | sash weight | |
|---|---|---|---|---|---|
| 700495 | bottom hinge timber 4/18 rh. | 4 | 18 | 100 kg | 4 |
| 700587 | bottom hinge timber 4/18 lh. | 4 | 18 | 100 kg | 4 |
| 700501 | bottom hinge S timber 4/18 rh. | 4 | 18 | 130 kg | 5 |
| 700594 | bottom hinge S timber 4/18 lh. | 4 | 18 | 130 kg | 5 |
| TBLB0010-... | bottom hinge pin diam.6 | - | - | - | - |
| FKEO0010-... | cover cap EL O | - | - | - | - |
| FKEU0010-... | cover cap EL U | - | - | - | - |
| FKEL0010-... | cover cap EL-S U | - | - | - | - |



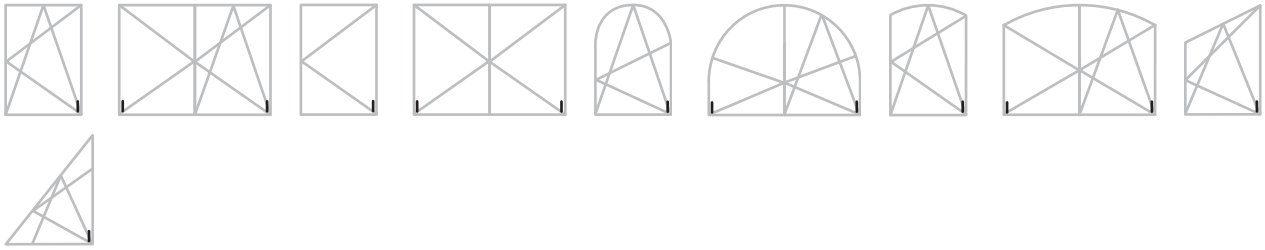

- For alternative colours of cover caps, see ‘Cover Caps’ page

- **Please observe:**
  Guidelines/notes on the product and on liability (VHBH directive as well as the other applicable documents listed - directive can be downloaded at www.beschlagindustrie.de/ggsb/richtlinien.asp )
  Specifications from the profile manufacturers/system owners (PVC, light metal) or DIN 68 121 “Wooden profiles for windows and portal doors”

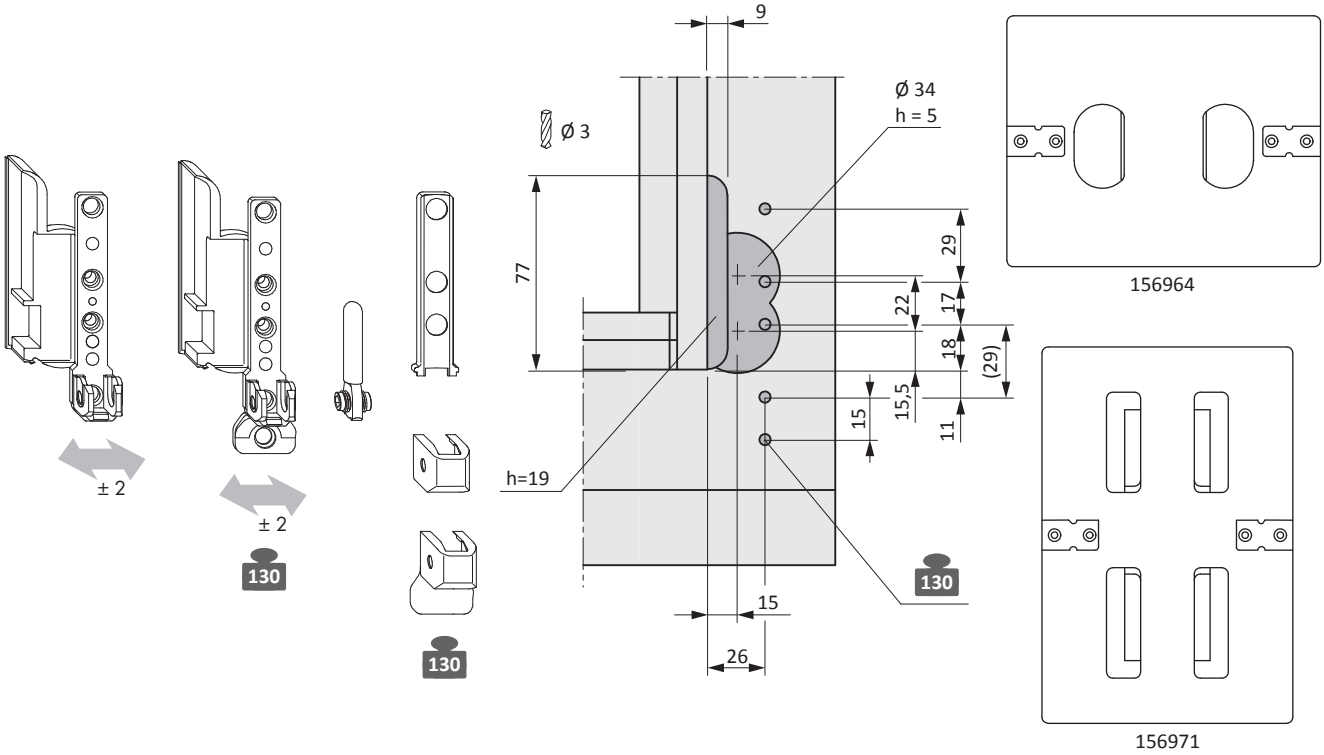

## Sales information

| Description | Part number | Surface | Colour | Box quantity |
|---|---|---|---|---|
| bottom hinge timber 4/18 rh. | 700495 | Titan Silver | without | 1 pc |
| | 275764 | Titan Silver | without | 100 pcs |
| bottom hinge timber 4/18 lh. | 700587 | Titan Silver | without | 1 pc |
| | 275870 | Titan Silver | without | 100 pcs |
| bottom hinge S timber 4/18 rh. | 700501 | Titan Silver | without | 1 pc |
| | 316153 | Titan Silver | without | 100 pcs |
| bottom hinge S timber 4/18 lh. | 700594 | Titan Silver | without | 1 pc |
| | 275887 | Titan Silver | without | 100 pcs |
| bottom hinge pin diam.6 | TBLB0010-10001_ | Titan Silver | without | 1 pc |
| | TBLB0010-10006_ | Titan Silver | without | 100 pcs |
| cover cap EL O | FKEO0010-00401_ | neutral | RAL9016 | 1 pc |
| | FKEO0010-00408_ | neutral | RAL9016 | 500 pcs |
| cover cap EL U | FKEU0010-00401_ | neutral | RAL9016 | 1 pc |
| | FKEU0010-00406_ | neutral | RAL9016 | 100 pcs |
| | FKEU0010-00408_ | neutral | RAL9016 | 500 pcs |
| cover cap EL-S U | FKEL0010-00401_ | neutral | RAL9016 | 1 pc |
| | FKEL0010-00408_ | neutral | RAL9016 | 500 pcs |

## Technical information

| Part number | Description | Airgap | rebate width | Groove axis | sash weight | |
|---|---|---|---|---|---|---|
| FBEL0201-... | bottom hinge timber 4/18-13 A0490 rh. | 4 | 18 | 13 | 100 kg | 4 |
| FBEL0202-... | bottom hinge timber 4/18-13 A0490 lh. | 4 | 18 | 13 | 100 kg | 4 |
| FBEL0211-... | bottom hinge S timber 4/18-13 A0490 rh. | 4 | 18 | 13 | 130 kg | 5 |
| FBEL0212-... | bottom hinge S timber 4/18-13 A0490 lh. | 4 | 18 | 13 | 130 kg | 5 |
| FBEL0161-... | bottom hinge timber 4/18-13 A3720 rh. | 4 | 18 | 13 | 100 kg | 4 |
| FBEL0162-... | bottom hinge timber 4/18-13 A3720 lh. | 4 | 18 | 13 | 100 kg | 4 |
| TBLB0010-... | bottom hinge pin diam.6 | - | - | - | - | - |
| FKEO0010-... | cover cap EL O | - | - | - | - | - |
| FKEU0010-... | cover cap EL U | - | - | - | - | - |
| FKEL0010-... | cover cap EL-S U | - | - | - | - | - |

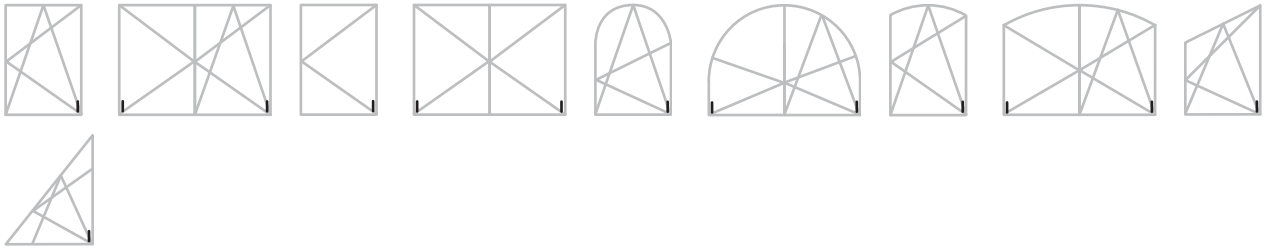

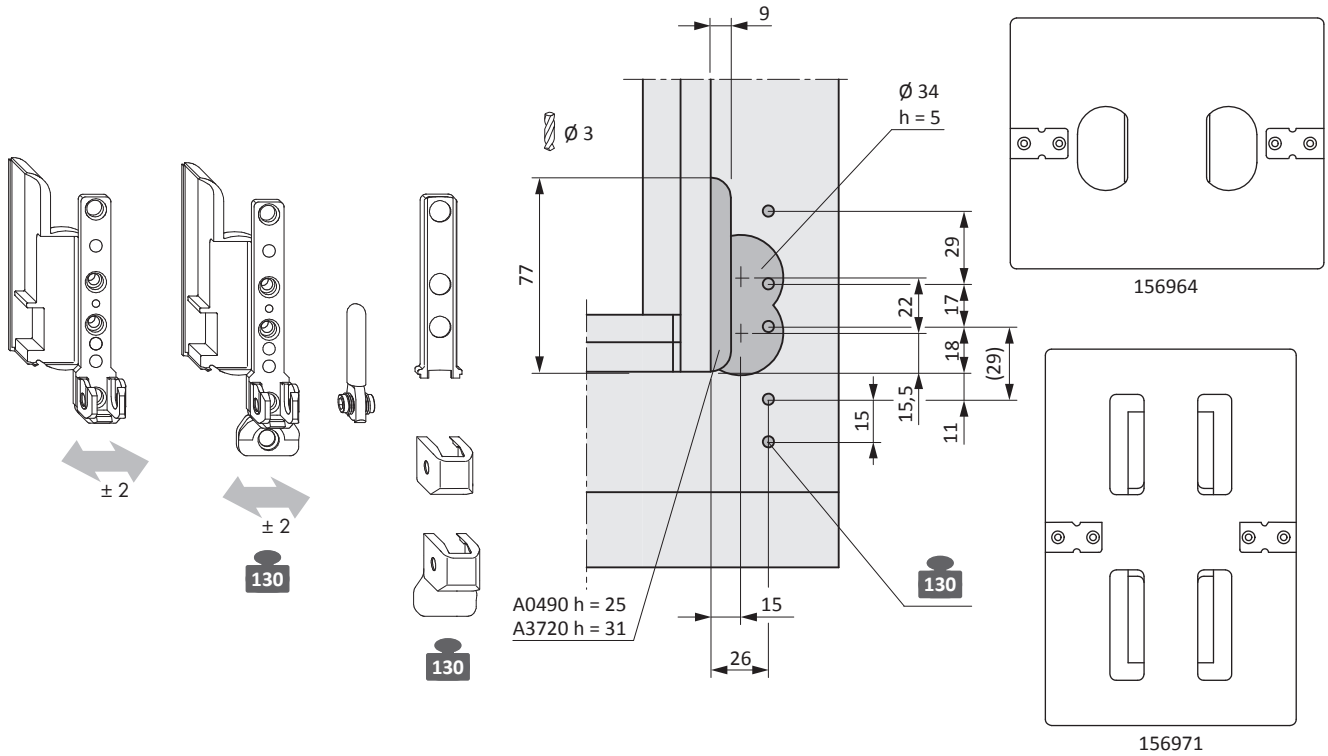

## Sales information

| Description | Part number | Surface | Colour | Box quantity |
|---|---|---|---|---|
| bottom hinge timber 4/18-13 A0490 rh. | FBEL0201-10001_ | Titan Silver | without | 1 pc |
| | FBEL0201-10006_ | Titan Silver | without | 100 pcs |
| bottom hinge timber 4/18-13 A0490 lh. | FBEL0202-10001_ | Titan Silver | without | 1 pc |
| | FBEL0202-10006_ | Titan Silver | without | 100 pcs |
| bottom hinge S timber 4/18-13 A0490 rh. | FBEL0211-10001_ | Titan Silver | without | 1 pc |
| | FBEL0211-10006_ | Titan Silver | without | 100 pcs |
| bottom hinge S timber 4/18-13 A0490 lh. | FBEL0212-10001_ | Titan Silver | without | 1 pc |
| | FBEL0212-10006_ | Titan Silver | without | 100 pcs |
| bottom hinge timber 4/18-13 A3720 rh. | FBEL0161-10001_ | Titan Silver | without | 1 pc |
| | FBEL0161-10006_ | Titan Silver | without | 100 pcs |
| bottom hinge timber 4/18-13 A3720 lh. | FBEL0162-10001_ | Titan Silver | without | 1 pc |
| | FBEL0162-10006_ | Titan Silver | without | 100 pcs |
| bottom hinge pin diam.6 | TBLB0010-10001_ | Titan Silver | without | 1 pc |
| | TBLB0010-10006_ | Titan Silver | without | 100 pcs |
| cover cap EL O | FKEO0010-00401_ | neutral | RAL9016 | 1 pc |
| | FKEO0010-00408_ | neutral | RAL9016 | 500 pcs |
| cover cap EL U | FKEU0010-00401_ | neutral | RAL9016 | 1 pc |
| | FKEU0010-00406_ | neutral | RAL9016 | 100 pcs |
| | FKEU0010-00408_ | neutral | RAL9016 | 500 pcs |
| cover cap EL-S U | FKEL0010-00401_ | neutral | RAL9016 | 1 pc |
| | FKEL0010-00408_ | neutral | RAL9016 | 500 pcs |

## Technical information

| Part number | Description | Airgap | rebate width | sash weight | |
|---|---|---|---|---|---|
| 700464 | bottom hinge AF timber 4/18 rh. | 4 | 18 | 100 kg | 4 |
| 700556 | bottom hinge AF timber 4/18 lh. | 4 | 18 | 100 kg | 4 |
| 700471 | bottom hinge S AF timber 4/18 rh. | 4 | 18 | 130 kg | 5 |
| 700563 | bottom hinge S AF timber 4/18 lh. | 4 | 18 | 130 kg | 5 |
| TBLB0010-... | bottom hinge pin diam.6 | - | - | - | - |
| FKEO0010-... | cover cap EL O | - | - | - | - |
| FKEU0010-... | cover cap EL U | - | - | - | - |
| FKEL0010-... | cover cap EL-S U | - | - | - | - |



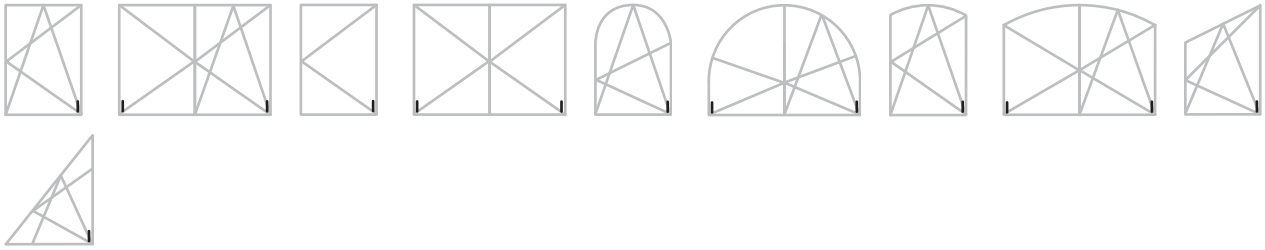

- For routing use on individual unassembled profile section
- For alternative colours of cover caps, see ‘Cover Caps’ page

- **Please observe:**
  Guidelines/notes on the product and on liability (VHBH directive as well as the other applicable documents listed - directive can be downloaded at www.beschlagindustrie.de/ggsb/richtlinien.asp )
  Specifications from the profile manufacturers/system owners (PVC, light metal) or DIN 68 121 “Wooden profiles for windows and portal doors”

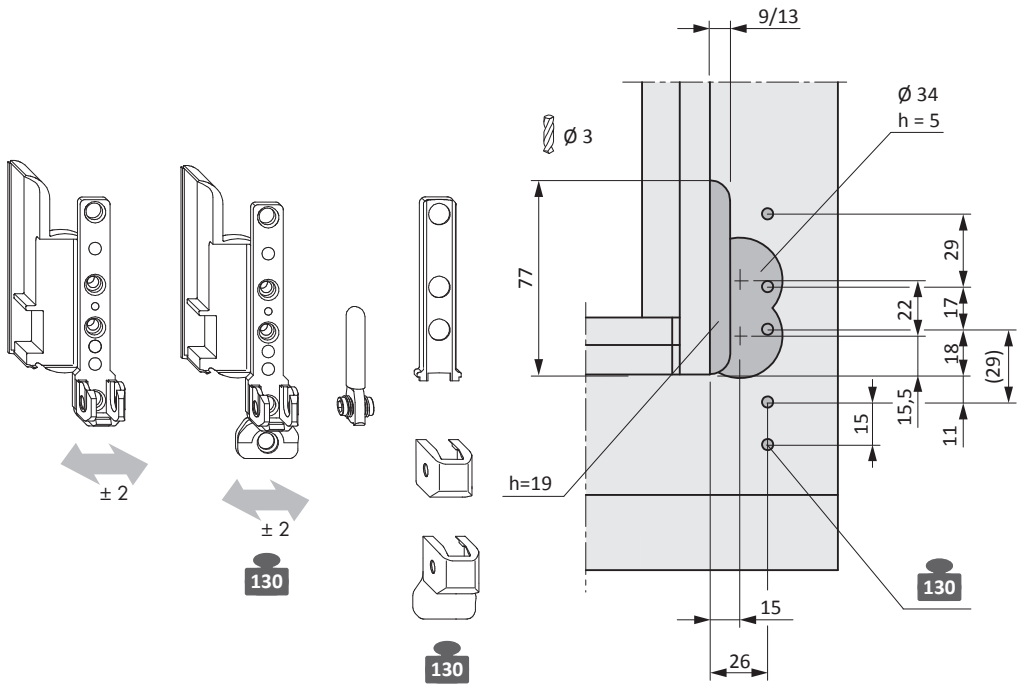

## Sales information

| Description | Part number | Surface | Colour | Box quantity |
|---|---|---|---|---|
| bottom hinge AF timber 4/18 rh. | 700464 | Titan Silver | without | 1 pc |
| | 275733 | Titan Silver | without | 100 pcs |
| bottom hinge AF timber 4/18 lh. | 700556 | Titan Silver | without | 1 pc |
| | 275849 | Titan Silver | without | 100 pcs |
| bottom hinge S AF timber 4/18 rh. | 700471 | Titan Silver | without | 1 pc |
| | 275740 | Titan Silver | without | 100 pcs |
| bottom hinge S AF timber 4/18 lh. | 700563 | Titan Silver | without | 1 pc |
| | 275856 | Titan Silver | without | 100 pcs |
| bottom hinge pin diam.6 | TBLB0010-10001_ | Titan Silver | without | 1 pc |
| | TBLB0010-10006_ | Titan Silver | without | 100 pcs |
| cover cap EL O | FKEO0010-00401_ | neutral | RAL9016 | 1 pc |
| | FKEO0010-00408_ | neutral | RAL9016 | 500 pcs |
| cover cap EL U | FKEU0010-00401_ | neutral | RAL9016 | 1 pc |
| | FKEU0010-00406_ | neutral | RAL9016 | 100 pcs |
| | FKEU0010-00408_ | neutral | RAL9016 | 500 pcs |
| cover cap EL-S U | FKEL0010-00401_ | neutral | RAL9016 | 1 pc |
| | FKEL0010-00408_ | neutral | RAL9016 | 500 pcs |

## Technical information

| Part number | Description | Airgap | rebate width | Groove axis | sash weight | |
|---|---|---|---|---|---|---|
| FBEL0321-... | bottom hinge AF timber 4/18 rh. | 4 | 18 | - | 100 kg | 4 |
| FBEL0322-... | bottom hinge AF timber 4/18 lh. | 4 | 18 | - | 100 kg | 4 |
| FBEL0331-... | bottom hinge S AF timber 4/18-13 rh. | 4 | 18 | 13 | 130 kg | 5 |
| FBEL0332-... | bottom hinge S AF timber 4/18-13 lh. | 4 | 18 | 13 | 130 kg | 5 |
| FBEL0261-... | bottom hinge AF timber 4/18-13 A3720 rh. | 4 | 18 | 13 | 100 kg | 4 |
| FBEL0262-... | bottom hinge AF timber 4/18-13 A3720 lh. | 4 | 18 | 13 | 100 kg | 4 |
| FBEL0271-... | bottom hinge S AF timber 4/18-13 A3720 rh. | 4 | 18 | 13 | 130 kg | 5 |
| FBEL0272-... | bottom hinge S AF timber 4/18-13 A3720 lh. | 4 | 18 | 13 | 130 kg | 5 |
| TBLB0010-... | bottom hinge pin diam.6 | - | - | - | - | - |
| FKEO0010-... | cover cap EL O | - | - | - | - | - |
| FKEU0010-... | cover cap EL U | - | - | - | - | - |
| FKEL0010-... | cover cap EL-S U | - | - | - | - | - |



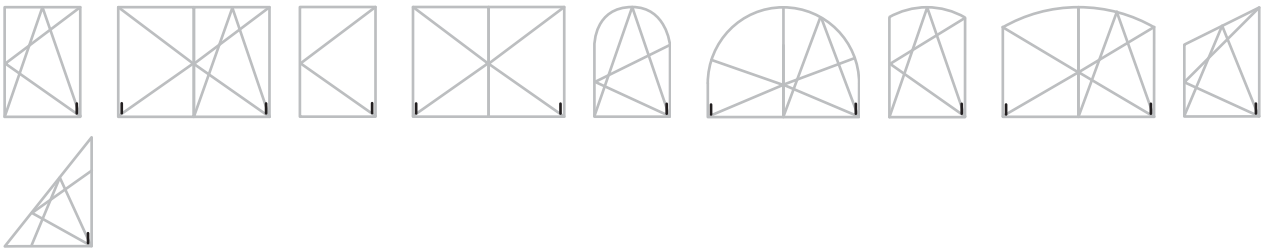

- For routing use on individual unassembled profile section
- For alternative colours of cover caps, see ‘Cover Caps’ page
- **Please observe:** Guidelines/notes on the product and on liability (VHBH directive as well as the other applicable documents listed - directive can be downloaded at www.beschlagindustrie.de /ggsb/richtlinien.asp ) Specifications from the profile manufacturers/ system owners (PVC, light metal) or DIN 68 121 “Wooden profiles for windows and portal doors”

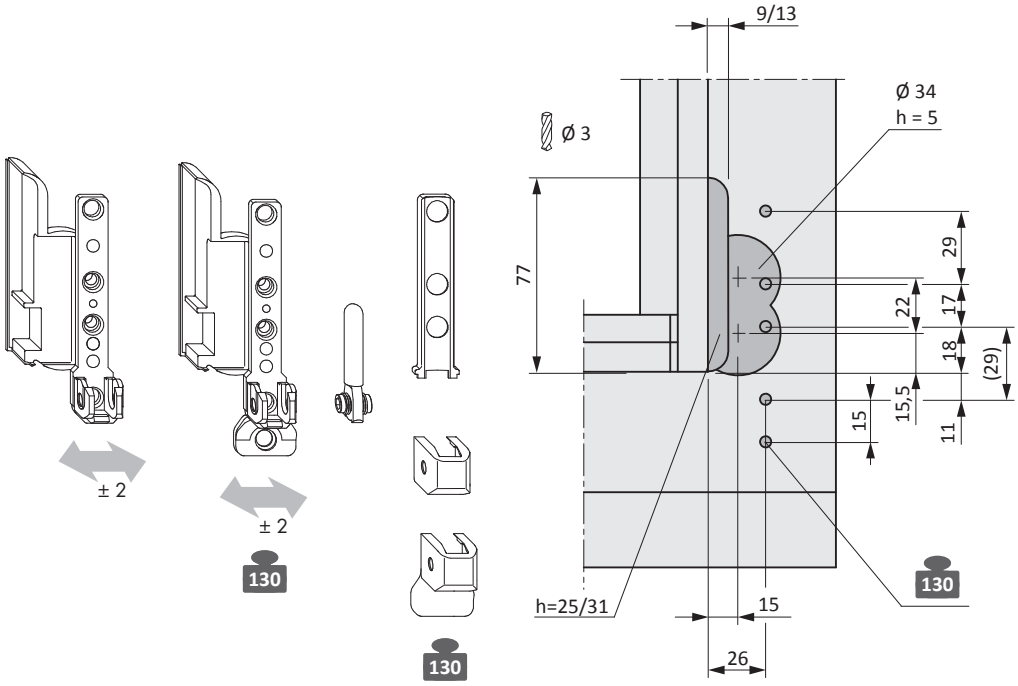

## Sales information

| Description | Part number | Surface | Colour | Box quantity |
|---|---|---|---|---|
| bottom hinge AF timber 4/18 rh. | FBEL0321-10001_ | Titan Silver | without | 1 pc |
| | FBEL0321-10006_ | Titan Silver | without | 100 pcs |
| bottom hinge AF timber 4/18 lh. | FBEL0322-10001_ | Titan Silver | without | 1 pc |
| | FBEL0322-10006_ | Titan Silver | without | 100 pcs |
| bottom hinge S AF timber 4/18-13 rh. | FBEL0331-10001_ | Titan Silver | without | 1 pc |
| | FBEL0331-10006_ | Titan Silver | without | 100 pcs |
| bottom hinge S AF timber 4/18-13 lh. | FBEL0332-10001_ | Titan Silver | without | 1 pc |
| | FBEL0332-10006_ | Titan Silver | without | 100 pcs |
| bottom hinge AF timber 4/18-13 A3720 rh. | FBEL0261-10001_ | Titan Silver | without | 1 pc |
| | FBEL0261-10006_ | Titan Silver | without | 100 pcs |
| bottom hinge AF timber 4/18-13 A3720 lh. | FBEL0262-10001_ | Titan Silver | without | 1 pc |
| | FBEL0262-10006_ | Titan Silver | without | 100 pcs |
| bottom hinge S AF timber 4/18-13 A3720 rh. | FBEL0271-10001_ | Titan Silver | without | 1 pc |
| | FBEL0271-10006_ | Titan Silver | without | 100 pcs |
| bottom hinge S AF timber 4/18-13 A3720 lh. | FBEL0272-10001_ | Titan Silver | without | 1 pc |
| | FBEL0272-10006_ | Titan Silver | without | 100 pcs |
| bottom hinge pin diam.6 | TBLB0010-10001_ | Titan Silver | without | 1 pc |
| | TBLB0010-10006_ | Titan Silver | without | 100 pcs |
| cover cap EL O | FKEO0010-00401_ | neutral | RAL9016 | 1 pc |
| | FKEO0010-00408_ | neutral | RAL9016 | 500 pcs |
| cover cap EL U | FKEU0010-00401_ | neutral | RAL9016 | 1 pc |
| | FKEU0010-00406_ | neutral | RAL9016 | 100 pcs |
| | FKEU0010-00408_ | neutral | RAL9016 | 500 pcs |
| cover cap EL-S U | FKEL0010-00401_ | neutral | RAL9016 | 1 pc |
| | FKEL0010-00408_ | neutral | RAL9016 | 500 pcs |

## Technical information

| Part number | Description | Airgap | rebate width | Groove axis | sash weight |
|---|---|---|---|---|---|
| TBWB0010-... | stay hinge DH timber 4/15-9 | 4 | 15 | 9 | 130 kg |
| TBWB0020-... | stay hinge DH timber 12/18-9 | 12 | 18 | 9 | 130 kg |
| TBWB0030-... | stay hinge DH timber 12/18-13 | 12 | 18 | 13 | 130 kg |
| TBWB0040-... | stay hinge DH timber 12/20-9 | 12 | 20 | 9 | 130 kg |
| TBWB0060-... | stay hinge DH timber 12/20-13 | 12 | 20 | 13 | 130 kg |
| FKWB0020-... | cover cap W timber | - | - | - | - |

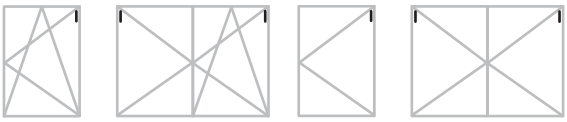

- For alternative colours of cover caps, see ‘Cover Caps’ page

- **Please observe:**
  Guidelines/notes on the product and on liability (VHBH directive as well as the other applicable documents listed - directive can be downloaded at www.beschlagindustrie.de/ggsb/richtlinien.asp )
  Specifications from the profile manufacturers/system owners (PVC, light metal) or DIN 68 121 “Wooden profiles for windows and portal doors”

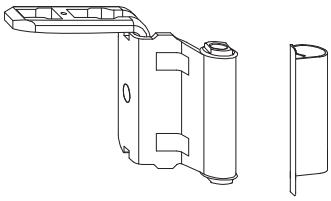

## Sales information

| Description | Part number | Surface | Colour | Box quantity |
|---|---|---|---|---|
| stay hinge DH timber 4/15-9 | TBWB0010-10001_ | Titan Silver | without | 1 pc |
| | TBWB0010-10006_ | Titan Silver | without | 100 pcs |
| stay hinge DH timber 12/18-9 | TBWB0020-10001_ | Titan Silver | without | 1 pc |
| | TBWB0020-10006_ | Titan Silver | without | 100 pcs |
| stay hinge DH timber 12/18-13 | TBWB0030-10001_ | Titan Silver | without | 1 pc |
| | TBWB0030-10006_ | Titan Silver | without | 100 pcs |
| | TBWB0030-10201_ | Titan Silver | RAL9003 | 1 pc |
| | TBWB0030-10205_ | Titan Silver | RAL9003 | 50 pcs |
| stay hinge DH timber 12/20-9 | TBWB0040-10001_ | Titan Silver | without | 1 pc |
| | TBWB0040-10006_ | Titan Silver | without | 100 pcs |
| stay hinge DH timber 12/20-13 | TBWB0060-10001_ | Titan Silver | without | 1 pc |
| | TBWB0060-10006_ | Titan Silver | without | 100 pcs |
| cover cap W timber | FKWB0020-00401_ | neutral | RAL9016 | 1 pc |
| | FKWB0020-00408_ | neutral | RAL9016 | 500 pcs |

## Technical information

| Part number | Description | Airgap | rebate width | Groove axis | sash weight |
|---|---|---|---|---|---|
| TBWB0120-... | stay hinge DH timber 4/15-9 A0231 | 4 | 15 | 9 | 130 kg |
| TBWB0130-... | stay hinge DH timber 12/18-9 A0231 | 12 | 18 | 9 | 130 kg |
| TBWB0140-... | stay hinge DH timber 12/18-13 A0231 | 12 | 18 | 13 | 130 kg |
| TBWB0160-... | stay hinge DH timber 12/20-9 A0231 | 12 | 20 | 9 | 130 kg |
| TBWB0170-... | stay hinge DH timber 12/20-13 A0231 | 12 | 20 | 13 | 130 kg |
| FKWB0020-... | cover cap W timber | - | - | - | - |

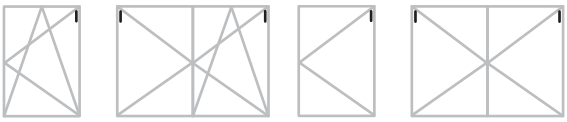

- With 90° turned sleeve
- For alternative colours of cover caps, see ‘Cover Caps’ page

- **Please observe:**
  Guidelines/notes on the product and on liability (VHBH directive as well as the other applicable documents listed - directive can be downloaded at www.beschlagindustrie.de/ggsb/richtlinien.asp )
  Specifications from the profile manufacturers/system owners (PVC, light metal) or DIN 68 121 “Wooden profiles for windows and portal doors”

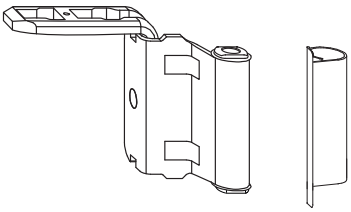

## Sales information

| Description | Part number | Surface | Colour | Box quantity |
|---|---|---|---|---|
| stay hinge DH timber 4/15-9 A0231 | TBWB0120-10001_ | Titan Silver | without | 1 pc |
| | TBWB0120-10006_ | Titan Silver | without | 100 pcs |
| stay hinge DH timber 12/18-9 A0231 | TBWB0130-10001_ | Titan Silver | without | 1 pc |
| | TBWB0130-10006_ | Titan Silver | without | 100 pcs |
| | TBWB0130-10201_ | Titan Silver | RAL9003 | 1 pc |
| | TBWB0130-10205_ | Titan Silver | RAL9003 | 50 pcs |
| stay hinge DH timber 12/18-13 A0231 | TBWB0140-10001_ | Titan Silver | without | 1 pc |
| | TBWB0140-10006_ | Titan Silver | without | 100 pcs |
| stay hinge DH timber 12/20-9 A0231 | TBWB0160-10001_ | Titan Silver | without | 1 pc |
| | TBWB0160-10006_ | Titan Silver | without | 100 pcs |
| stay hinge DH timber 12/20-13 A0231 | TBWB0170-10001_ | Titan Silver | without | 1 pc |
| | TBWB0170-10006_ | Titan Silver | without | 100 pcs |
| cover cap W timber | FKWB0020-00401_ | neutral | RAL9016 | 1 pc |
| | FKWB0020-00408_ | neutral | RAL9016 | 500 pcs |

## Technical information

| Part number | Description | Airgap | rebate width | Groove axis | sash weight |
|---|---|---|---|---|---|
| TBWB0070-... | stay hinge RFA DH timber 12/18-13 A0175 | 12 | 18 | 13 | 130 kg |
| FKWB0010-... | cover cap W PVC | - | - | - | - |



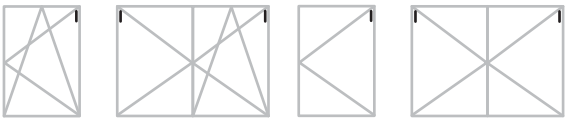

- For jigless frame installation
- Hinge clearance in the over rebate
- For alternative colours of cover caps, see ‘Cover Caps’ page

- **Please observe:**
  Guidelines/notes on the product and on liability (VHBH directive as well as the other applicable documents listed - directive can be downloaded at www.beschlagindustrie.de/ggsb/richtlinien.asp )
  Specifications from the profile manufacturers/system owners (PVC, light metal) or DIN 68 121 “Wooden profiles for windows and portal doors”

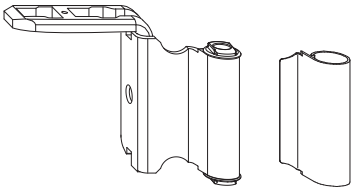

## Sales information

| Description | Part number | Surface | Colour | Box quantity |
|---|---|---|---|---|
| stay hinge RFA DH timber 12/18-13 A0175 | TBWB0070-10001_ | Titan Silver | without | 1 pc |
| | TBWB0070-10006_ | Titan Silver | without | 100 pcs |
| cover cap W PVC | FKWB0010-00401_ | neutral | RAL9016 | 1 pc |
| | FKWB0010-00406_ | neutral | RAL9016 | 100 pcs |

## Drill holes and routings

- Sash over rebate routing

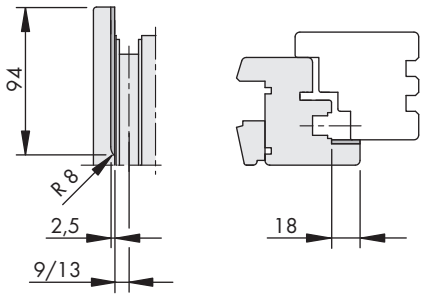

## Technical information

| Part number | Description | Airgap | rebate width | Groove axis | sash weight |
|---|---|---|---|---|---|
| TBWB0090-... | stay hinge RFA DH timber 12/18-9 A0175/A0231 | 12 | 18 | 9 | 130 kg |
| TBWB0080-... | stay hinge RFA DH timber 12/18-13 A0175/A0231 | 12 | 18 | 13 | 130 kg |
| TBWB0110-... | stay hinge RFA DH timber 12/20-13 A0175/A0231 | 12 | 20 | 13 | 130 kg |
| FKWB0010-... | cover cap W PVC | - | - | - | - |



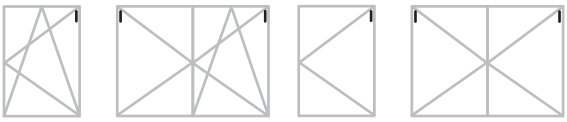

- With 90° turned sleeve
- For jigless frame installation
- Hinge clearance in the over rebate
- For alternative colours of cover caps, see ‘Cover Caps’ page

- **Please observe:**
  Guidelines/notes on the product and on liability (VHBH directive as well as the other applicable documents listed - directive can be downloaded at www.beschlagindustrie.de/ggsb/richtlinien.asp )
  Specifications from the profile manufacturers/system owners (PVC, light metal) or DIN 68 121 “Wooden profiles for windows and portal doors”

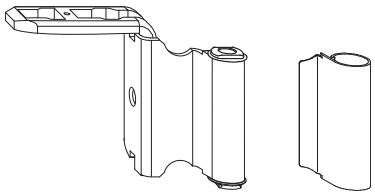

## Sales information

| Description | Part number | Surface | Colour | Box quantity |
|---|---|---|---|---|
| stay hinge RFA DH timber 12/18-9 A0175/A0231 | TBWB0090-10001_ | Titan Silver | without | 1 pc |
| | TBWB0090-10006_ | Titan Silver | without | 100 pcs |
| stay hinge RFA DH timber 12/18-13 A0175/A0231 | TBWB0080-10001_ | Titan Silver | without | 1 pc |
| | TBWB0080-10006_ | Titan Silver | without | 100 pcs |
| stay hinge RFA DH timber 12/20-13 A0175/A0231 | TBWB0110-10001_ | Titan Silver | without | 1 pc |
| | TBWB0110-10006_ | Titan Silver | without | 100 pcs |
| cover cap W PVC | FKWB0010-00401_ | neutral | RAL9016 | 1 pc |
| | FKWB0010-00406_ | neutral | RAL9016 | 100 pcs |

## Drill holes and routings

- Sash over rebate routing

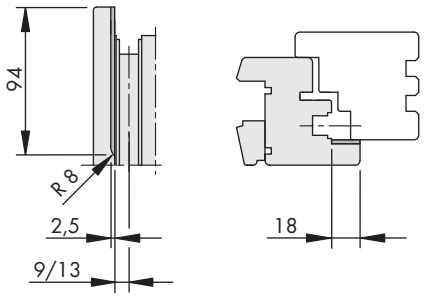

## Technical information

| Part number | Description | Airgap | rebate width | Groove axis | sash weight |
|---|---|---|---|---|---|
| TBWS0020-... | stay hinge SF DH timber 12/18-9 | 12 | 18 | 9 | 80 kg |
| TBWS0030-... | stay hinge SF DH timber 12/18-13 | 12 | 18 | 13 | 80 kg |
| TBWS0040-... | stay hinge SF DH timber 12/20-9 | 12 | 20 | 9 | 80 kg |
| TBWS0050-... | stay hinge SF DH timber 12/20-13 | 12 | 20 | 13 | 80 kg |
| FKWB0020-... | cover cap W timber | - | - | - | - |

- Profile related corner-bracket, but max. 35° angle
- For alternative colours of cover caps, see ‘Cover Caps’ page

- **Please observe:**
  Guidelines/notes on the product and on liability (VHBH directive as well as the other applicable documents listed - directive can be downloaded at www.beschlagindustrie.de/ggsb/richtlinien.asp )
  Specifications from the profile manufacturers/system owners (PVC, light metal) or DIN 68 121 “Wooden profiles for windows and portal doors”

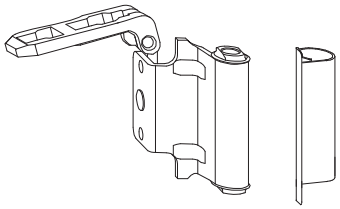

## Sales information

| Description | Part number | Surface | Colour | Box quantity |
|---|---|---|---|---|
| stay hinge SF DH timber 12/18-9 | TBWS0020-10001_ | Titan Silver | without | 1 pc |
| | TBWS0020-10006_ | Titan Silver | without | 100 pcs |
| stay hinge SF DH timber 12/18-13 | TBWS0030-10001_ | Titan Silver | without | 1 pc |
| | TBWS0030-10006_ | Titan Silver | without | 100 pcs |
| stay hinge SF DH timber 12/20-9 | TBWS0040-10001_ | Titan Silver | without | 1 pc |
| | TBWS0040-10006_ | Titan Silver | without | 100 pcs |
| stay hinge SF DH timber 12/20-13 | TBWS0050-10001_ | Titan Silver | without | 1 pc |
| | TBWS0050-10006_ | Titan Silver | without | 100 pcs |
| cover cap W timber | FKWB0020-00401_ | neutral | RAL9016 | 1 pc |
| | FKWB0020-00408_ | neutral | RAL9016 | 500 pcs |

1.3

## Technical information

| Part number | Description | Airgap | rebate width | sash weight | |
|---|---|---|---|---|---|
| FBSL0100-... | top hinge DH timber 12/18 | 12 | 18 | 130 kg | 6 |
| 704219 | top hinge DH timber 12/20 | 12 | 20 | 130 kg | 6 |
| FBSB0010-... | top hinge pin diam.6 | - | - | - | - |
| FKSL0010-... | cover cap S | - | - | - | - |

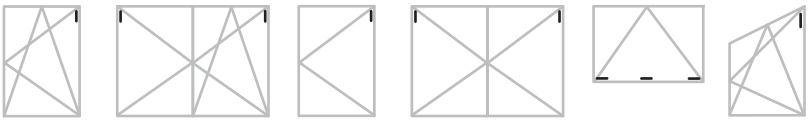

- Jig, refer to PDB, line item FAFSSE
- For alternative colours of cover caps, see 'Cover Caps' page

- **Please observe:**
  Guidelines/notes on the product and on liability (VHBH directive as well as the other applicable documents listed - directive can be downloaded at www.beschlagindustrie.de/ggsb/richtlinien.asp )
  Specifications from the profile manufacturers/system owners (PVC, light metal) or DIN 68 121 "Wooden profiles for windows and portal doors"

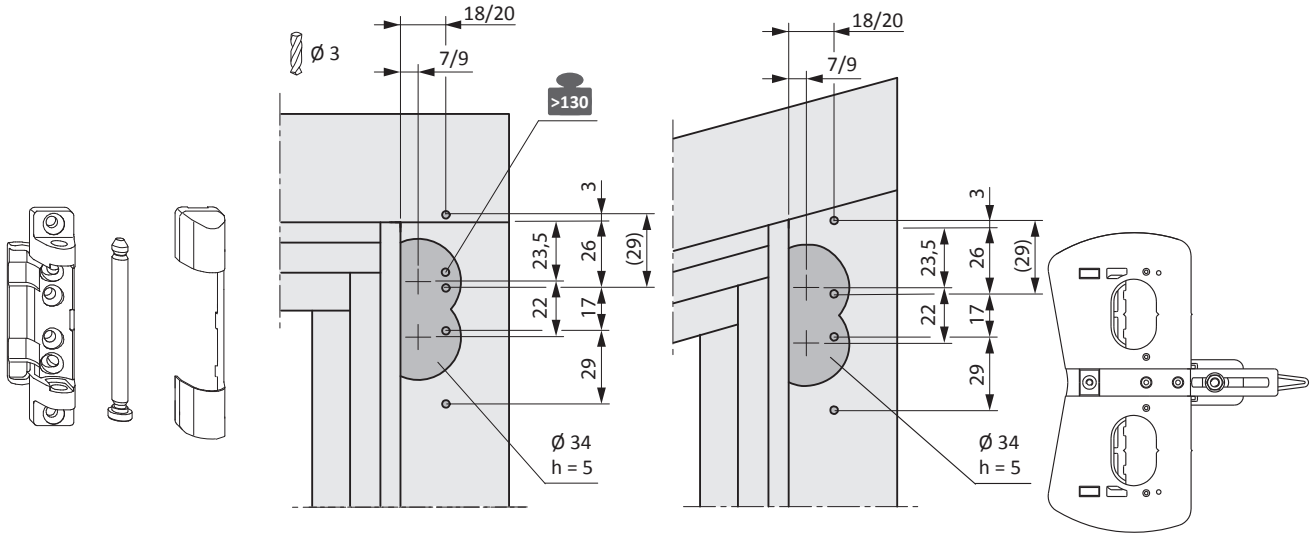


## Sales information

| Description | Part number | Surface | Colour | Box quantity |
|---|---|---|---|---|
| top hinge DH timber 12/18 | FBSL0100-10001_ | Titan Silver | without | 1 pc |
| | FBSL0100-10006_ | Titan Silver | without | 100 pcs |
| | 848128 | Titan Silver | RAL9003 | 1 pc |
| | 238516 | Titan Silver | RAL9003 | 100 pcs |
| top hinge DH timber 12/20 | 704219 | Titan Silver | without | 1 pc |
| | 280058 | Titan Silver | without | 100 pcs |
| top hinge pin diam.6 | FBSB0010-10001_ | Titan Silver | without | 1 pc |
| | FBSB0010-10006_ | Titan Silver | without | 100 pcs |
| | 280010 | Titan Silver | without | 500 pcs |
| cover cap S | FKSL0010-00401_ | neutral | RAL9016 | 1 pc |
| | FKSL0010-00406_ | neutral | RAL9016 | 100 pcs |
| | FKSL0010-00408_ | neutral | RAL9016 | 500 pcs |

## Technical information

| Part number | Description | Airgap | rebate width | sash weight | |
|---|---|---|---|---|---|
| 704233 | top hinge RFA DH timber 12/18 | 12 | 18 | 100 kg | 6 |
| FBSL0020-... | top hinge RFA DH timber 12/20 | 12 | 20 | 100 kg | 6 |
| FBSB0010-... | top hinge pin diam.6 | - | - | - | - |
| FKSL0050-... | cover cap S RFA A0175 | - | - | - | - |



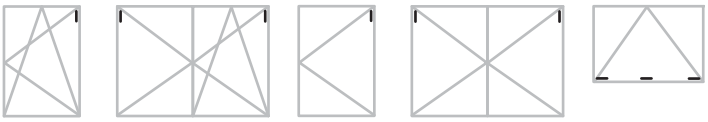

- For jigless frame installation
- Hinge clearance in the over rebate
- For alternative colours of cover caps, see ‘Cover Caps’ page

- **Please observe:**
  Guidelines/notes on the product and on liability (VHBH directive as well as the other applicable documents listed - directive can be downloaded at www.beschlagindustrie.de/ggsb/richtlinien.asp )
  Specifications from the profile manufacturers/system owners (PVC, light metal) or DIN 68 121 “Wooden profiles for windows and portal doors”

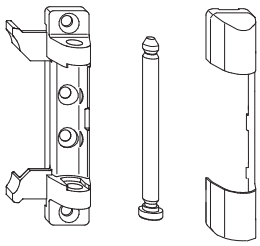

## Sales information

| Description | Part number | Surface | Colour | Box quantity |
|---|---|---|---|---|
| top hinge RFA DH timber 12/18 | 704233 | Titan Silver | without | 1 pc |
| | 280089 | Titan Silver | without | 100 pcs |
| top hinge RFA DH timber 12/20 | FBSL0020-10001_ | Titan Silver | without | 1 pc |
| | FBSL0020-10006_ | Titan Silver | without | 100 pcs |
| top hinge pin diam.6 | FBSB0010-10001_ | Titan Silver | without | 1 pc |
| | FBSB0010-10006_ | Titan Silver | without | 100 pcs |
| | 280010 | Titan Silver | without | 500 pcs |
| cover cap S RFA A0175 | FKSL0050-00201_ | neutral | RAL9003 | 1 pc |
| | FKSL0050-00206_ | neutral | RAL9003 | 100 pcs |
| | FKSL0050-00207_ | neutral | RAL9003 | 250 pcs |

## Drill holes and routings

- Sash over rebate routing

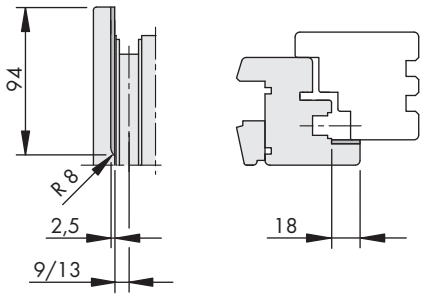


## Installation advice

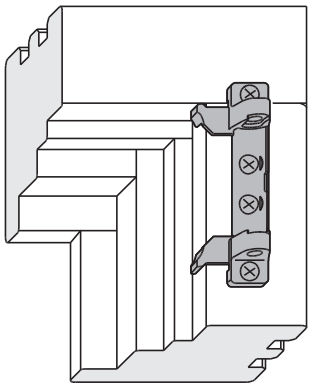

## Technical information

| Part number | Description | Airgap | rebate width | Groove axis | sash weight | |
|---|---|---|---|---|---|---|
| 704240 | top hinge DH timber 4/15 A0178 | 4 | 15 | 9 | 130 kg | 6 |
| FBSB0010-... | top hinge pin diam.6 | - | - | - | - | - |
| FKSL0010-... | cover cap S | - | - | - | - | - |



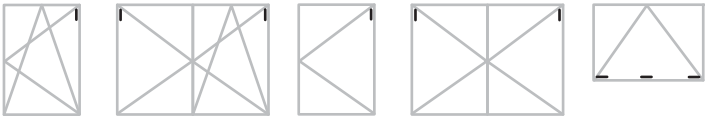

- For alternative colours of cover caps, see ‘Cover Caps’ page
- **Please observe:**
  Guidelines/notes on the product and on liability (VHBH directive as well as the other applicable documents listed - directive can be downloaded at www.beschlagindustrie.de/ggsb/richtlinien.asp )
  Specifications from the profile manufacturers/system owners (PVC, light metal) or DIN 68 121 “Wooden profiles for windows and portal doors”

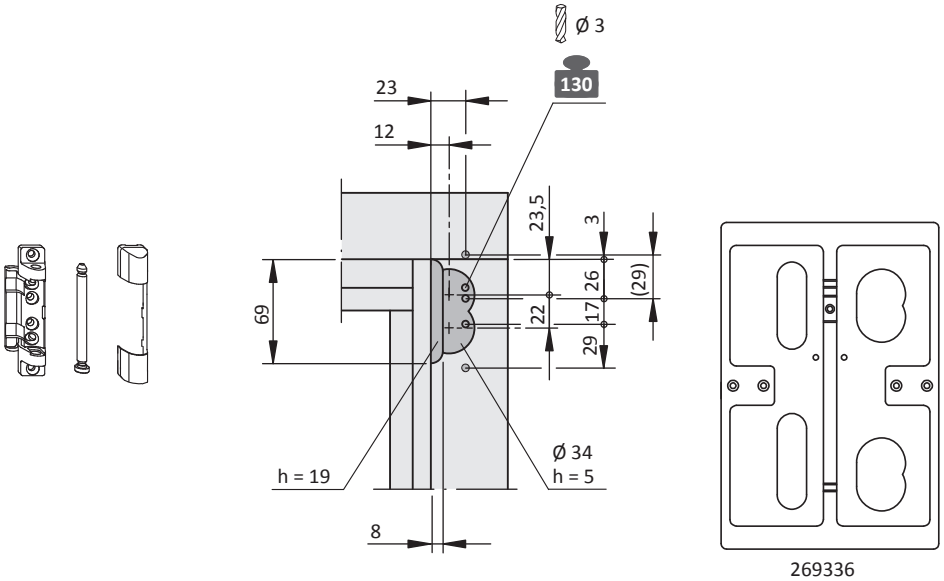


## Sales information

| Description | Part number | Surface | Colour | Box quantity |
|---|---|---|---|---|
| top hinge DH timber 4/15 A0178 | 704240 | Titan Silver | without | 1 pc |
| | 280096 | Titan Silver | without | 100 pcs |
| top hinge pin diam.6 | FBSB0010-10001_ | Titan Silver | without | 1 pc |
| | FBSB0010-10006_ | Titan Silver | without | 100 pcs |
| | 280010 | Titan Silver | without | 500 pcs |
| cover cap S | FKSL0010-00401_ | neutral | RAL9016 | 1 pc |
| | FKSL0010-00406_ | neutral | RAL9016 | 100 pcs |
| | FKSL0010-00408_ | neutral | RAL9016 | 500 pcs |

1.3

## Technical information

| Part number | Description | Airgap | rebate width | Groove axis | sash weight | |
|---|---|---|---|---|---|---|
| 704226 | top hinge DH timber 4/18 | 4 | 18 | 9 | 130 kg | 6 |
| FBSL0150-... | top hinge 25 mm DH timber 4/18 A0490 | 4 | 18 | 13 | 130 kg | 6 |
| FBSL0130-... | top hinge 31 mm DH timber 4/18 A3720 | 4 | 18 | 13 | 130 kg | 6 |
| FBSB0010-... | top hinge pin diam.6 | - | - | - | - | - |
| FKSL0010-... | cover cap S | - | - | - | - | - |

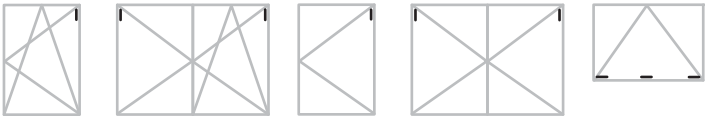

- For alternative colours of cover caps, see ‘Cover Caps’ page

- **Please observe:**
  Guidelines/notes on the product and on liability (VHBH directive as well as the other applicable documents listed - directive can be downloaded at www.beschlagindustrie.de/ggsb/richtlinien.asp )
  Specifications from the profile manufacturers/system owners (PVC, light metal) or DIN 68 121 “Wooden profiles for windows and portal doors”

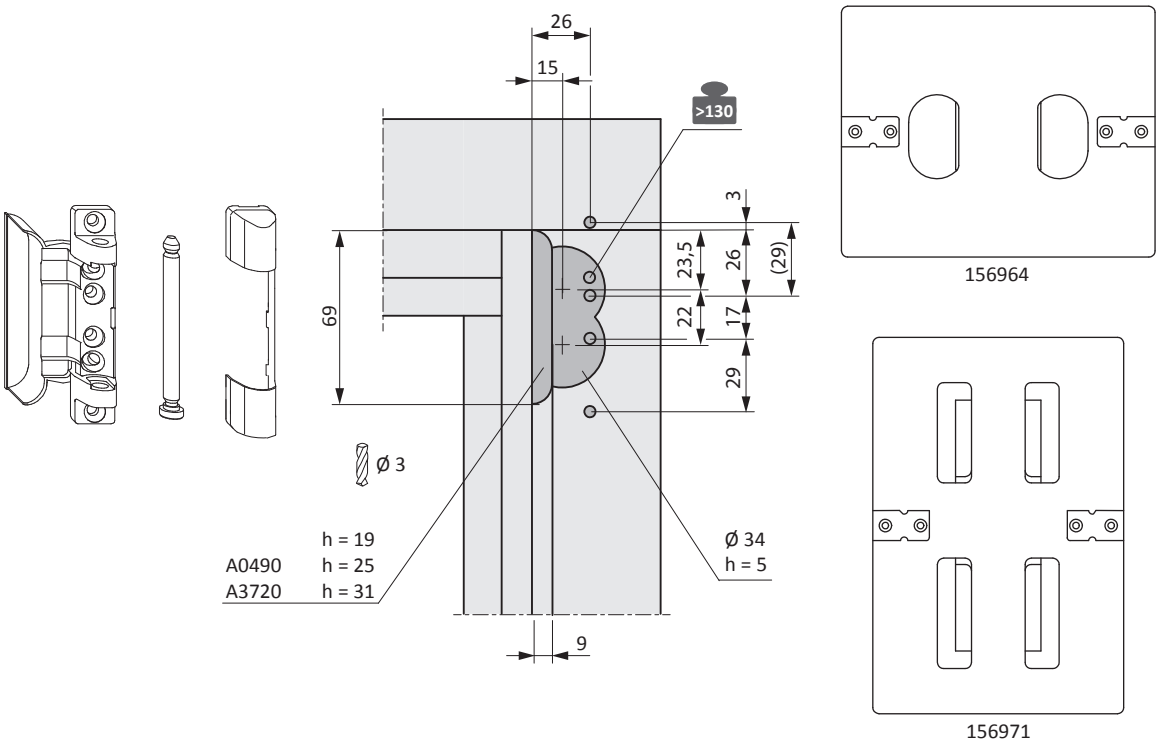

## Sales information

| Description | Part number | Surface | Colour | Box quantity |
|---|---|---|---|---|
| top hinge DH timber 4/18 | 704226 | Titan Silver | without | 1 pc |
| | 280072 | Titan Silver | without | 50 pcs |
| top hinge 25 mm DH timber 4/18 A0490 | FBSL0150-10001_ | Titan Silver | without | 1 pc |
| | FBSL0150-10006_ | Titan Silver | without | 100 pcs |
| top hinge 31 mm DH timber 4/18 A3720 | FBSL0130-10001_ | Titan Silver | without | 1 pc |
| | FBSL0130-10006_ | Titan Silver | without | 100 pcs |
| top hinge pin diam.6 | FBSB0010-10001_ | Titan Silver | without | 1 pc |
| | FBSB0010-10006_ | Titan Silver | without | 100 pcs |
| | 280010 | Titan Silver | without | 500 pcs |
| cover cap S | FKSL0010-00401_ | neutral | RAL9016 | 1 pc |
| | FKSL0010-00406_ | neutral | RAL9016 | 100 pcs |
| | FKSL0010-00408_ | neutral | RAL9016 | 500 pcs |

1.3

## Technical information

| Part number | Description | Airgap | rebate width | Groove axis | sash weight | |
|---|---|---|---|---|---|---|
| 704301 | top hinge DH AF timber 4/18 rh. | 4 | 18 | 9 | 130 kg | 6 |
| 704318 | top hinge DH AF timber 4/18 lh. | 4 | 18 | 9 | 130 kg | 6 |
| FBSL0231-... | top hinge DH AF timber 4/18 A3721 rh. | 4 | 18 | 13 | 130 kg | 6 |
| FBSL0232-... | top hinge DH AF timber 4/18 A3721 lh. | 4 | 18 | 13 | 130 kg | 6 |
| FBSL0321-... | top hinge AF timber 4/18 A0490 rh. | 4 | 18 | 13 | 130 kg | 6 |
| FBSL0322-... | top hinge AF timber 4/18 A0490 lh. | 4 | 18 | 13 | 130 kg | 6 |
| FBSB0010-... | top hinge pin diam.6 | - | - | - | - | - |
| FKSL0010-... | cover cap S | - | - | - | - | - |

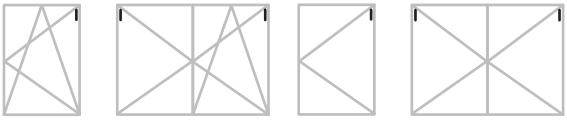

- For routing use on individual unassembled profile section
- For alternative colours of cover caps, see ‘Cover Caps’ page

- **Please observe:**
  Guidelines/notes on the product and on liability (VHBH directive as well as the other applicable documents listed - directive can be downloaded at www.beschlagindustrie.de/ggsb/richtlinien.asp )
  Specifications from the profile manufacturers/system owners (PVC, light metal) or DIN 68 121 “Wooden profiles for windows and portal doors”

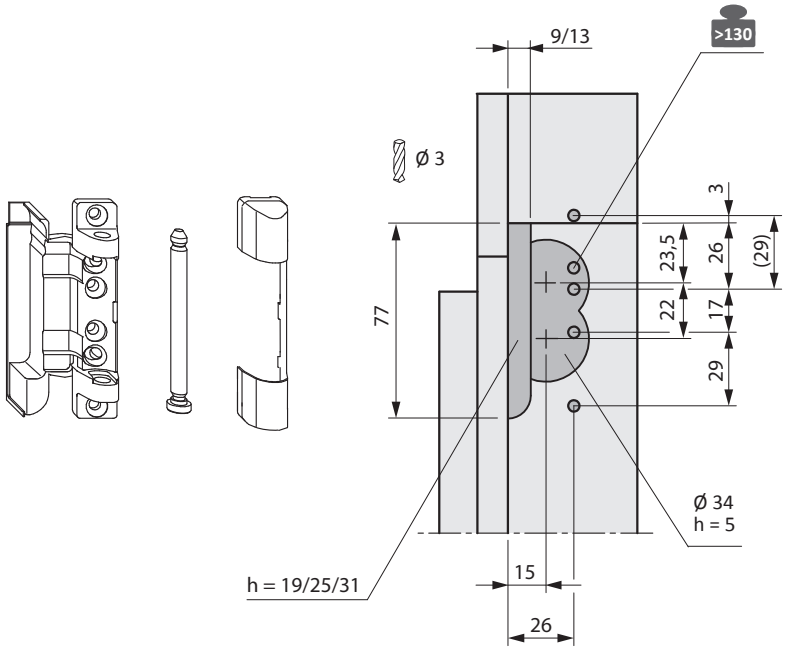

## Sales information

| Description | Part number | Surface | Colour | Box quantity |
|---|---|---|---|---|
| top hinge DH AF timber 4/18 rh. | 704301 | Titan Silver | without | 1 pc |
| | 280171 | Titan Silver | without | 100 pcs |
| top hinge DH AF timber 4/18 lh. | 704318 | Titan Silver | without | 1 pc |
| | 280188 | Titan Silver | without | 100 pcs |
| top hinge DH AF timber 4/18 A3721 rh. | FBSL0231-10001_ | Titan Silver | without | 1 pc |
| | FBSL0231-10006_ | Titan Silver | without | 100 pcs |
| top hinge DH AF timber 4/18 A3721 lh. | FBSL0232-10001_ | Titan Silver | without | 1 pc |
| | FBSL0232-10006_ | Titan Silver | without | 100 pcs |
| top hinge AF timber 4/18 A0490 rh. | FBSL0321-10001_ | Titan Silver | without | 1 pc |
| | FBSL0321-10006_ | Titan Silver | without | 100 pcs |
| top hinge AF timber 4/18 A0490 lh. | FBSL0322-10001_ | Titan Silver | without | 1 pc |
| | FBSL0322-10006_ | Titan Silver | without | 100 pcs |
| top hinge pin diam.6 | FBSB0010-10001_ | Titan Silver | without | 1 pc |
| | FBSB0010-10006_ | Titan Silver | without | 100 pcs |
| | 280010 | Titan Silver | without | 500 pcs |
| cover cap S | FKSL0010-00401_ | neutral | RAL9016 | 1 pc |
| | FKSL0010-00406_ | neutral | RAL9016 | 100 pcs |
| | FKSL0010-00408_ | neutral | RAL9016 | 500 pcs |

## Technical information

| Part number | Description | Airgap | rebate width | sash weight | |
|---|---|---|---|---|---|
| 700013 | bag FAVORIT-RB timber | 12 | 18 | 80 kg | 4 |
| 700020 | bag FAVORIT-RB timber | 12 | 20 | 80 kg | 4 |
| FKSL0030-... | cover cap S 7 RB | - | - | - | - |
| FKWB0031-... | cover cap W RB rh. | - | - | - | - |
| FKWB0032-... | cover cap W RB lh. | - | - | - | - |

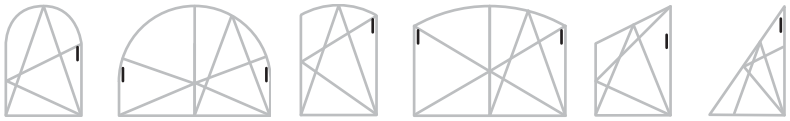

- For additional drilling and routing details refer to installation instructions RB
- For alternative colours of cover caps, see ‘Cover Caps’ page

- **Please observe:**
  Guidelines/notes on the product and on liability (VHBH directive as well as the other applicable documents listed - directive can be downloaded at www.beschlagindustrie.de/ggsb/richtlinien.asp )
  Specifications from the profile manufacturers/system owners (PVC, light metal) or DIN 68 121 “Wooden profiles for windows and portal doors”

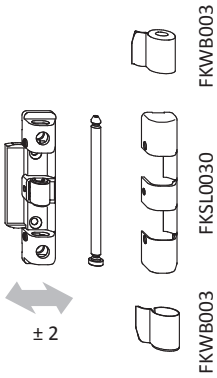


## Sales information

| Description | Part number | Surface | Colour | Box quantity |
|---|---|---|---|---|
| bag FAVORIT-RB timber | 700013 | Titan Silver | without | 1 pc |
| | 275092 | Titan Silver | without | 5 pcs |
| bag FAVORIT-RB timber | 700020 | Titan Silver | without | 1 pc |
| | 275108 | Titan Silver | without | 5 pcs |
| cover cap S 7 RB | FKSL0030-00401_ | neutral | RAL9016 | 1 pc |
| | FKSL0030-00406_ | neutral | RAL9016 | 100 pcs |
| cover cap W RB rh. | FKWB0031-00401_ | neutral | RAL9016 | 1 pc |
| | FKWB0031-00406_ | neutral | RAL9016 | 100 pcs |
| cover cap W RB lh. | FKWB0032-00401_ | neutral | RAL9016 | 1 pc |
| | FKWB0032-00406_ | neutral | RAL9016 | 100 pcs |

## Drill holes and routings

- Dimension Z varies according to arch size and must be marked accordingly
- Jig, refer to PDB, FAFSSE

- 1. Start of the arch
  2. Start of the segmental arch
  3. Frame rebate edge

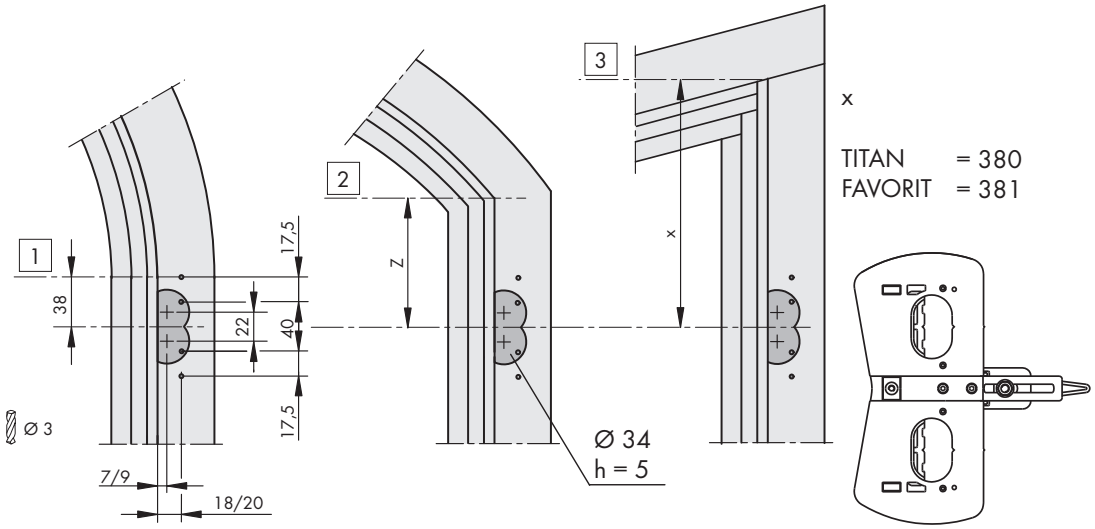

## Technical information

| Part number | Description | Airgap | rebate width | Groove axis | sash weight | |
|---|---|---|---|---|---|---|
| 700037 | bag FAVORIT-RB timber | 4 | 15 | 9 | 80 kg | 4 |
| FKSL0030-... | cover cap S 7 RB | - | - | - | - | - |
| FKWB0031-... | cover cap W RB rh. | - | - | - | - | - |
| FKWB0032-... | cover cap W RB lh. | - | - | - | - | - |

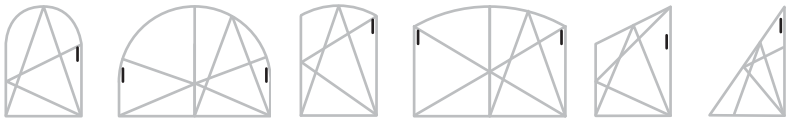

- For additional drilling and routing details refer to installation instructions RB
- For alternative colours of cover caps, see ‘Cover Caps’ page

- **Please observe:**
  Guidelines/notes on the product and on liability (VHBH directive as well as the other applicable documents listed - directive can be downloaded at www.beschlagindustrie.de/ggsb/richtlinien.asp )
  Specifications from the profile manufacturers/system owners (PVC, light metal) or DIN 68 121 “Wooden profiles for windows and portal doors”

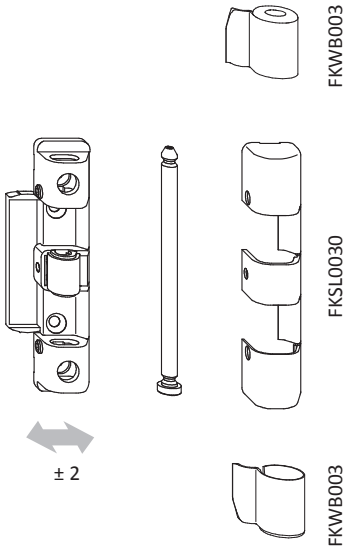


## Sales information

| Description | Part number | Surface | Colour | Box quantity |
|---|---|---|---|---|
| bag FAVORIT-RB timber | 700037 | Titan Silver | without | 1 pc |
| | 275191 | Titan Silver | without | 5 pcs |
| cover cap S 7 RB | FKSL0030-00401_ | neutral | RAL9016 | 1 pc |
| | FKSL0030-00406_ | neutral | RAL9016 | 100 pcs |
| cover cap W RB rh. | FKWB0031-00401_ | neutral | RAL9016 | 1 pc |
| | FKWB0031-00406_ | neutral | RAL9016 | 100 pcs |
| cover cap W RB lh. | FKWB0032-00401_ | neutral | RAL9016 | 1 pc |
| | FKWB0032-00406_ | neutral | RAL9016 | 100 pcs |

## Drill holes and routings

- Dimension Z varies according to arch size and must be marked accordingly
- 1. Start of the arch
  2. Start of the segmental arch
  3. Frame rebate edge

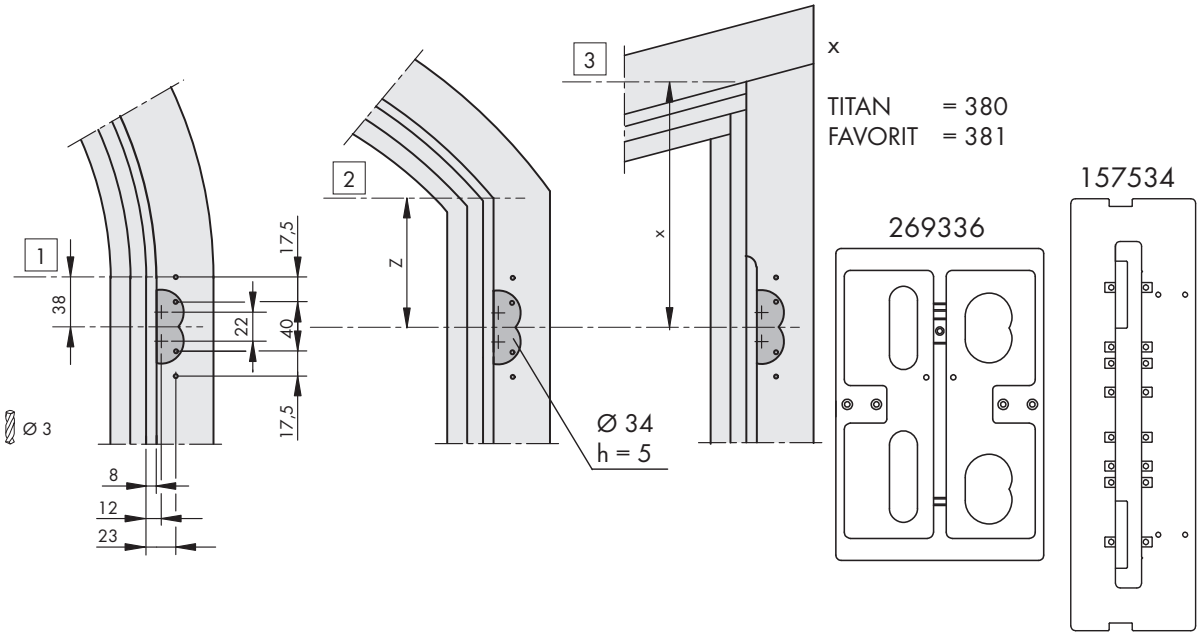

## Technical information

| Part number | Description | Airgap | rebate width | Groove axis | |
|---|---|---|---|---|---|
| 700099 | sash hinge timber 4/15-9 A0178 | 4 | 15 | 9 | 2 |
| 700778 | sash hinge timber 12/18-9 | 12 | 18 | 9 | 2 |
| 722312 | sash hinge timber 12/18-13 | 12 | 18 | 13 | 2 |
| 700785 | sash hinge timber 12/20-9 | 12 | 20 | 9 | 2 |
| FBFB0010-... | sash hinge timber 12/20-13 | 12 | 20 | 13 | 2 |
| FKWB0020-... | cover cap W timber | - | - | - | - |

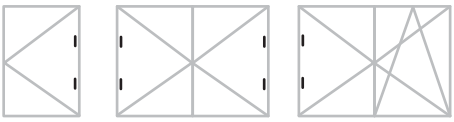

- Automatic lateral adjustment of ± 2 mm
- For alternative colours of cover caps, see ‘Cover Caps’ page

- **Please observe:**
  Guidelines/notes on the product and on liability (VHBH directive as well as the other applicable documents listed - directive can be downloaded at www.beschlagindustrie.de/ggsb/richtlinien.asp )
  Specifications from the profile manufacturers/system owners (PVC, light metal) or DIN 68 121 “Wooden profiles for windows and portal doors”

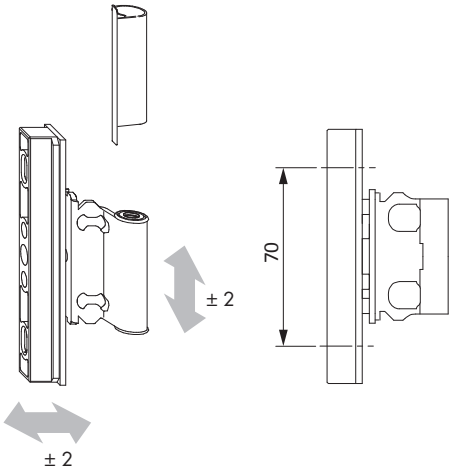


## Sales information

| Description | Part number | Surface | Colour | Box quantity |
|---|---|---|---|---|
| sash hinge timber 4/15-9 A0178 | 700099 | Titan Silver | without | 1 pc |
| sash hinge timber 12/18-9 | 700778 | Titan Silver | without | 1 pc |
| | 276099 | Titan Silver | without | 50 pcs |
| sash hinge timber 12/18-13 | 722312 | Titan Silver | without | 1 pc |
| | 316047 | Titan Silver | without | 50 pcs |
| sash hinge timber 12/20-9 | 700785 | Titan Silver | without | 1 pc |
| | 276105 | Titan Silver | without | 50 pcs |
| sash hinge timber 12/20-13 | FBFB0010-10001_ | Titan Silver | without | 1 pc |
| | FBFB0010-10005_ | Titan Silver | without | 50 pcs |
| cover cap W timber | FKWB0020-00401_ | neutral | RAL9016 | 1 pc |
| | FKWB0020-00408_ | neutral | RAL9016 | 500 pcs |

## Technical information

| Part number | Description | Airgap | rebate width | Groove axis | |
|---|---|---|---|---|---|
| 700105 | sash hinge H-ON H no grve 4/15-9 A0178 | 4 | 15 | 9 | 2 |
| 700792 | sash hinge H-ON H no grve 12/18-9 | 12 | 18 | 9 | 2 |
| 700808 | sash hinge H-ON H no grve 12/20-9 | 12 | 20 | 9 | 2 |
| FKWB0020-... | cover cap W timber | - | - | - | - |



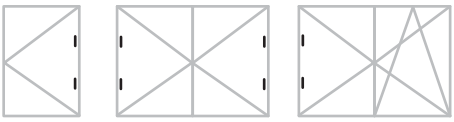

- Automatic lateral adjustment of ± 2 mm
- For sashes without hardware groove
- For alternative colours of cover caps, see ‘Cover Caps’ page

- **Please observe:**
  Guidelines/notes on the product and on liability (VHBH directive as well as the other applicable documents listed - directive can be downloaded at www.beschlagindustrie.de/ggsb/richtlinien.asp )
  Specifications from the profile manufacturers/system owners (PVC, light metal) or DIN 68 121 “Wooden profiles for windows and portal doors”

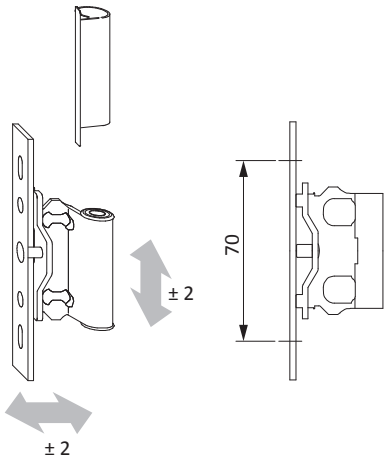


## Sales information

| Description | Part number | Surface | Colour | Box quantity |
|---|---|---|---|---|
| sash hinge H-ON H no grve 4/15-9 A0178 | 700105 | Titan Silver | without | 1 pc |
| | 275245 | Titan Silver | without | 50 pcs |
| sash hinge H-ON H no grve 12/18-9 | 700792 | Titan Silver | without | 1 pc |
| | 276112 | Titan Silver | without | 50 pcs |
| sash hinge H-ON H no grve 12/20-9 | 700808 | Titan Silver | without | 1 pc |
| | 276129 | Titan Silver | without | 50 pcs |
| cover cap W timber | FKWB0020-00401_ | neutral | RAL9016 | 1 pc |
| | FKWB0020-00408_ | neutral | RAL9016 | 500 pcs |

## Technical information

| Part number | Description | Airgap | rebate width | Groove axis | sash weight | |
|---|---|---|---|---|---|---|
| 700082 | tilt sash hinge timber 4/15-9 A0178 | 4 | 15 | 9 | 50 kg | 2 |
| 700754 | tilt sash hinge timber 12/18-9 | 12 | 18 | 9 | 50 kg | 2 |
| 700761 | tilt sash hinge timber 12/20-9 | 12 | 20 | 9 | 50 kg | 2 |
| 722404 | tilt sash hinge timber 12/18-13 | 12 | 18 | 13 | 50 kg | 2 |
| FBKF0010-... | tilt sash hinge timber 12/20-13 | 12 | 20 | 13 | 50 kg | 2 |
| FKWB0020-... | cover cap W timber | - | - | - | - | - |

- For alternative colours of cover caps, see ‘Cover Caps’ page

- **Please observe:**
  Guidelines/notes on the product and on liability (VHBH directive as well as the other applicable documents listed - directive can be downloaded at www.beschlagindustrie.de/ggsb/richtlinien.asp )
  Specifications from the profile manufacturers/system owners (PVC, light metal) or DIN 68 121 “Wooden profiles for windows and portal doors”

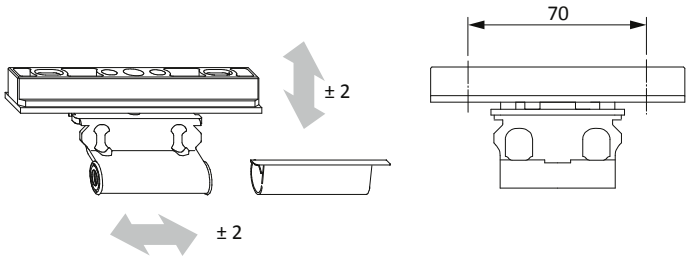


## Sales information

| Description | Part number | Surface | Colour | Box quantity |
|---|---|---|---|---|
| tilt sash hinge timber 4/15-9 A0178 | 700082 | Titan Silver | without | 1 pc |
| | 275207 | Titan Silver | without | 50 pcs |
| tilt sash hinge timber 12/18-9 | 700754 | Titan Silver | without | 1 pc |
| | 276075 | Titan Silver | without | 50 pcs |
| tilt sash hinge timber 12/20-9 | 700761 | Titan Silver | without | 1 pc |
| | 276082 | Titan Silver | without | 50 pcs |
| | FBKF0030-10201_ | Titan Silver | RAL9003 | 1 pc |
| tilt sash hinge timber 12/18-13 | 722404 | Titan Silver | without | 1 pc |
| | 316160 | Titan Silver | without | 50 pcs |
| tilt sash hinge timber 12/20-13 | FBKF0010-10001_ | Titan Silver | without | 1 pc |
| | FBKF0010-10005_ | Titan Silver | without | 50 pcs |
| cover cap W timber | FKWB0020-00401_ | neutral | RAL9016 | 1 pc |
| | FKWB0020-00408_ | neutral | RAL9016 | 500 pcs |

## Technical information

| Part number | Description | Airgap | rebate width | Groove axis | sash weight | |
|---|---|---|---|---|---|---|
| 717745 | tilt sash hinge RFA timber 12/18-9 A0175 | 12 | 18 | 9 | 50 kg | 2 |
| 717752 | tilt sash hinge RFA timber 12/20-9 A0175 | 12 | 20 | 9 | 50 kg | 2 |
| FBKF0060-... | tilt sash hinge RFA timber 12/18-13 A0175 | 12 | 18 | 13 | 50 kg | 2 |
| FBKF0040-... | tilt sash hinge RFA timber 12/20-13 A0175 | 12 | 20 | 13 | 50 kg | 2 |
| FKWB0010-... | cover cap W PVC | - | - | - | - | - |



- For jigless frame installation
- Hinge clearance in the over rebate
- For alternative colours of cover caps, see ‘Cover Caps’ page

- **Please observe:**
  Guidelines/notes on the product and on liability (VHBH directive as well as the other applicable documents listed - directive can be downloaded at www.beschlagindustrie.de/ggsb/richtlinien.asp )
  Specifications from the profile manufacturers/system owners (PVC, light metal) or DIN 68 121 “Wooden profiles for windows and portal doors”

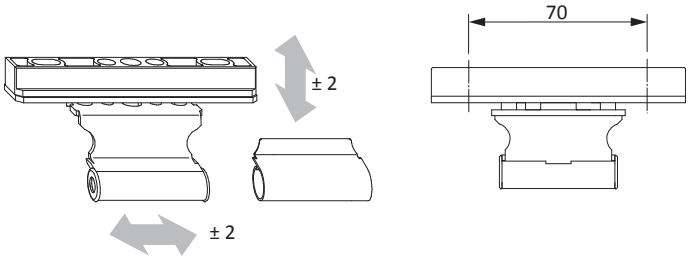


## Sales information

| Description | Part number | Surface | Colour | Box quantity |
|---|---|---|---|---|
| tilt sash hinge RFA timber 12/18-9 A0175 | 717745 | Titan Silver | without | 1 pc |
| | 303122 | Titan Silver | without | 50 pcs |
| tilt sash hinge RFA timber 12/20-9 A0175 | 717752 | Titan Silver | without | 1 pc |
| | 303146 | Titan Silver | without | 50 pcs |
| tilt sash hinge RFA timber 12/18-13 A0175 | FBKF0060-10001_ | Titan Silver | without | 1 pc |
| | FBKF0060-10005_ | Titan Silver | without | 50 pcs |
| tilt sash hinge RFA timber 12/20-13 A0175 | FBKF0040-10001_ | Titan Silver | without | 1 pc |
| | FBKF0040-10005_ | Titan Silver | without | 50 pcs |
| cover cap W PVC | FKWB0010-00401_ | neutral | RAL9016 | 1 pc |
| | FKWB0010-00406_ | neutral | RAL9016 | 100 pcs |

## Drill holes and routings

- Sash over rebate routing



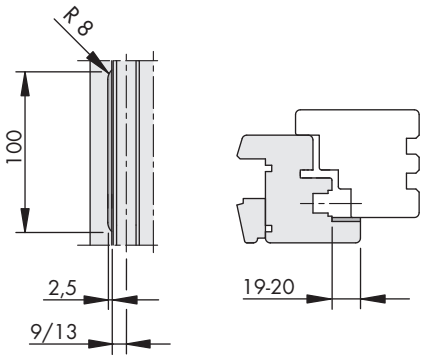

## Technical information

| Part number | Description | Airgap | rebate width | Groove axis | sash weight | |
|---|---|---|---|---|---|---|
| FBDF0040-... | turn only hinge RB timber 12/18-9 | 12 | 18 | 9 | 80 kg | 4 |
| FBDF0050-... | turn only hinge RB timber 12/18-13 | 12 | 18 | 13 | 80 kg | 4 |
| FBDF0010-... | turn only hinge RB timber 12/20-13 | 12 | 20 | 13 | 80 kg | 4 |



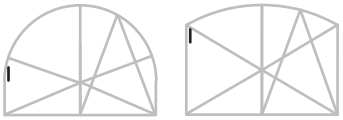

- **Please observe:**
  Guidelines/notes on the product and on liability (VHBH directive as well as the other applicable documents listed - directive can be downloaded at www.beschlagindustrie.de/ggsb/richtlinien.asp )
  Specifications from the profile manufacturers/system owners (PVC, light metal) or DIN 68 121 “Wooden profiles for windows and portal doors”

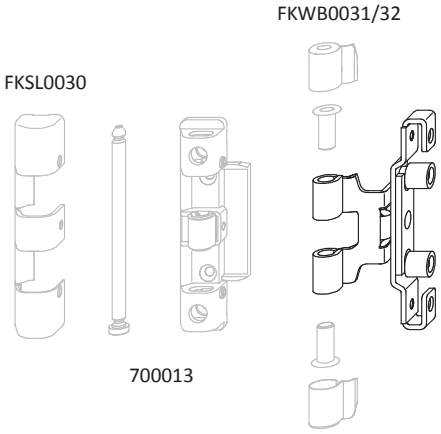


## Sales information

| Description | Part number | Surface | Colour | Box quantity |
|---|---|---|---|---|
| turn only hinge RB timber 12/18-9 | FBDF0040-10001_ | Titan Silver | without | 1 pc |
| | FBDF0040-10004_ | Titan Silver | without | 25 pcs |
| turn only hinge RB timber 12/18-13 | FBDF0050-10001_ | Titan Silver | without | 1 pc |
| | FBDF0050-10004_ | Titan Silver | without | 25 pcs |
| turn only hinge RB timber 12/20-13 | FBDF0010-10001_ | Titan Silver | without | 1 pc |
| | FBDF0010-10004_ | Titan Silver | without | 25 pcs |

## Technical information

| Part number | Description | sash weight | |
|---|---|---|---|
| TBDF0010-... | turn only hinge timber .. | 80 kg | 2 |
| TKDF0010-... | cover cap DFB | - | - |
| TKWB0010-... | cover cap W PVC | - | - |



- Execution for timber windows with 6mm supporting peg
- Note:
  Observe the total sash weight of the interconnected sashes with regard to the max. permissable sash weight of the hinge side!"
- The overall sash rebate width of the connected sashes may not exceed 1650 mm
- Fenestration screw fixing: 4x50 mm
- Turn only hinge H requirements:
  2 pieces on FFH 480-1400 mm
  3 pieces on FFH 1401-2400 mm
  4 pieces on FFH 2401-3000 mm

- **Please observe:**
  Guidelines/notes on the product and on liability (VHBH directive as well as the other applicable documents listed - directive can be downloaded at www.beschlagindustrie.de/ggsb/richtlinien.asp )
  Specifications from the profile manufacturers/system owners (PVC, light metal) or DIN 68 121 “Wooden profiles for windows and portal doors”

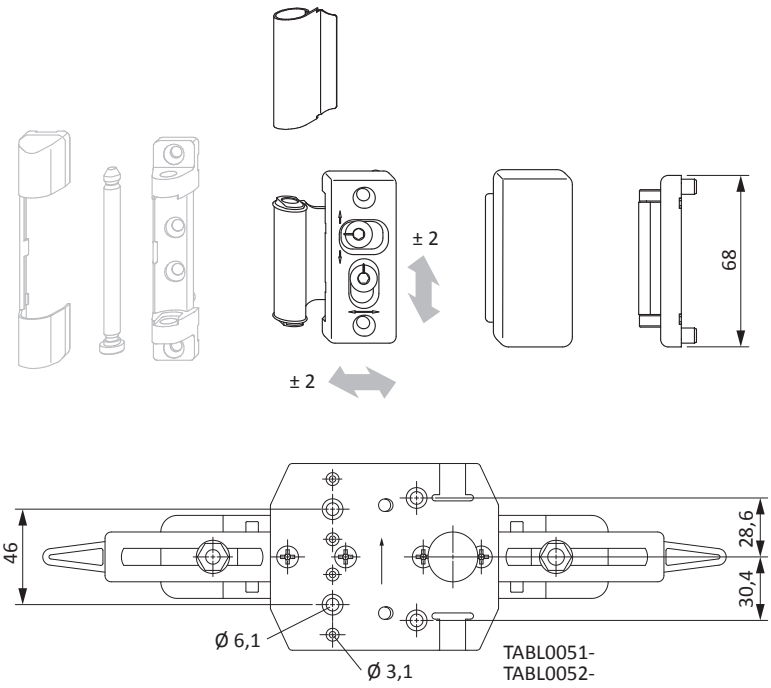


## Sales information

| Description | Part number | Surface | Colour | Box quantity |
|---|---|---|---|---|
| turn only hinge timber .. | TBDF0010-10001_ | Titan Silver | without | 1 pc |
| | TBDF0010-10004_ | Titan Silver | without | 25 pcs |
| cover cap DFB | TKDF0010-00201_ | neutral | RAL9003 | 1 pc |
| | TKDF0010-00205_ | neutral | RAL9003 | 50 pcs |
| | TKDF0010-01101_ | neutral | RAL8019 | 1 pc |
| | TKDF0010-01105_ | neutral | RAL8019 | 50 pcs |
| cover cap W PVC | TKWB0010-00201_ | neutral | RAL9003 | 1 pc |
| | TKWB0010-00206_ | neutral | RAL9003 | 100 pcs |
| | TKWB0010-01101_ | neutral | RAL8019 | 1 pc |
| | TKWB0010-01106_ | neutral | RAL8019 | 100 pcs |

## Installation advice

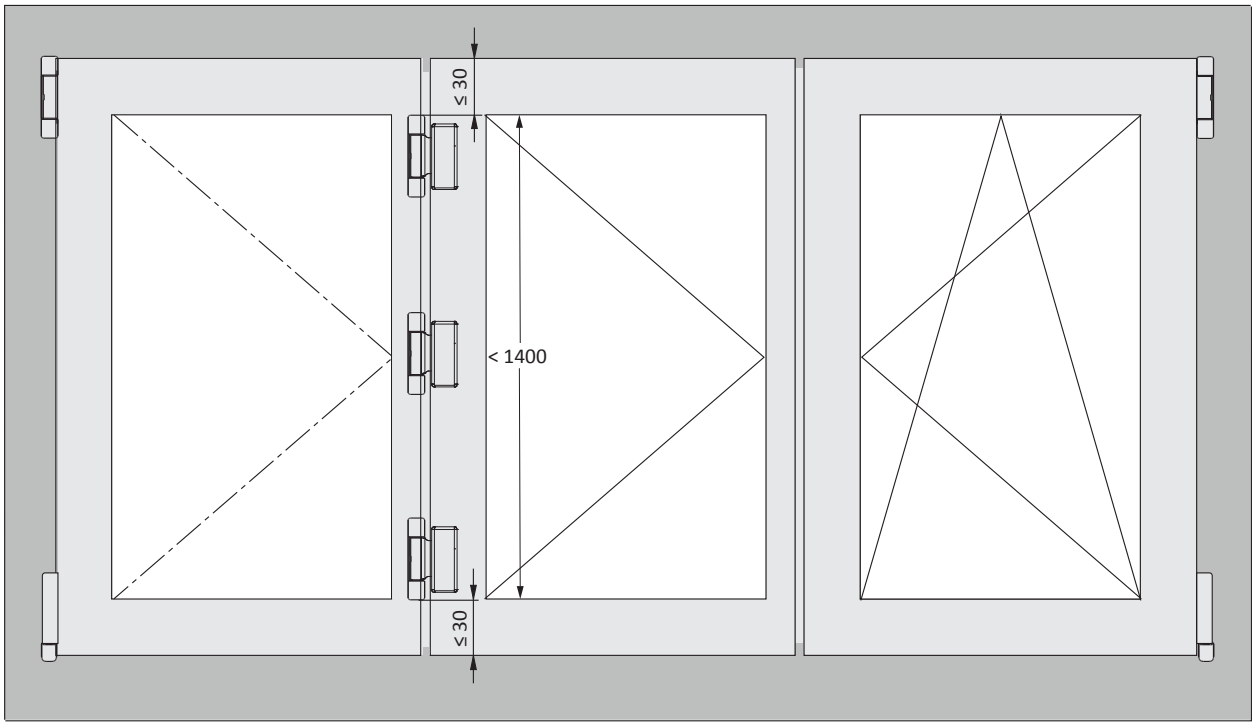


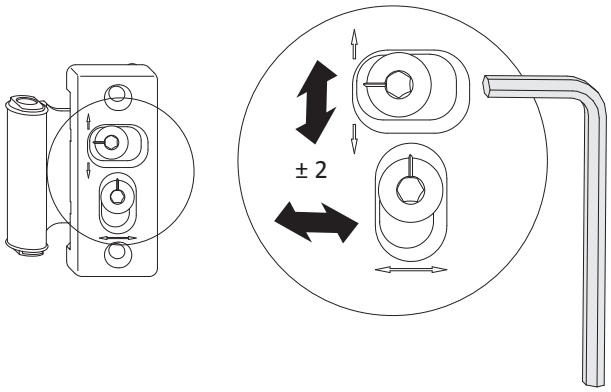

## Technical information

| Part number | Description | Airgap | sash weight | |
|---|---|---|---|---|
| FBEL0400-... | top hinge 12/ | 12 | 80 kg | 2 |
| FBEL0410-... | bottom hinge 12/ | 12 | 80 kg | 2 |
| FBFB0041-... | bottom sash hinge rh. | - | 80 kg | 3 |
| FBFB0042-... | bottom sash hinge lh. | - | 80 kg | 3 |
| FBFB0051-... | top sash hinge rh. | - | 80 kg | 3 |
| FBFB0052-... | top sash hinge lh. | - | 80 kg | 3 |
| FKDZ0010-... | cover cap DZB timber | - | - | - |



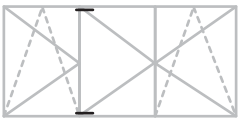

- French-window hardware for 3-sashed windows and balcony-doors
- For basic security
- 1. packer FL on connection sashes as Tilt + Turn sash
- 2. packer for bottom hinge on sound insulating windows
- A - jig when designing connecting sash as turn sash
- B - jig when designing connecting sash as tilt and turn sash
- C - sound-absorbing window: jig when desigining connecting sash as turn sash
- **Please observe:**
  Guidelines/notes on the product and on liability (VHBH directive as well as the other applicable documents listed - directive can be downloaded at www.beschlagindustrie.de/ggsb/richtlinien.asp )
  Specifications from the profile manufacturers/system owners (PVC, light metal) or DIN 68 121 “Wooden profiles for windows and portal doors”

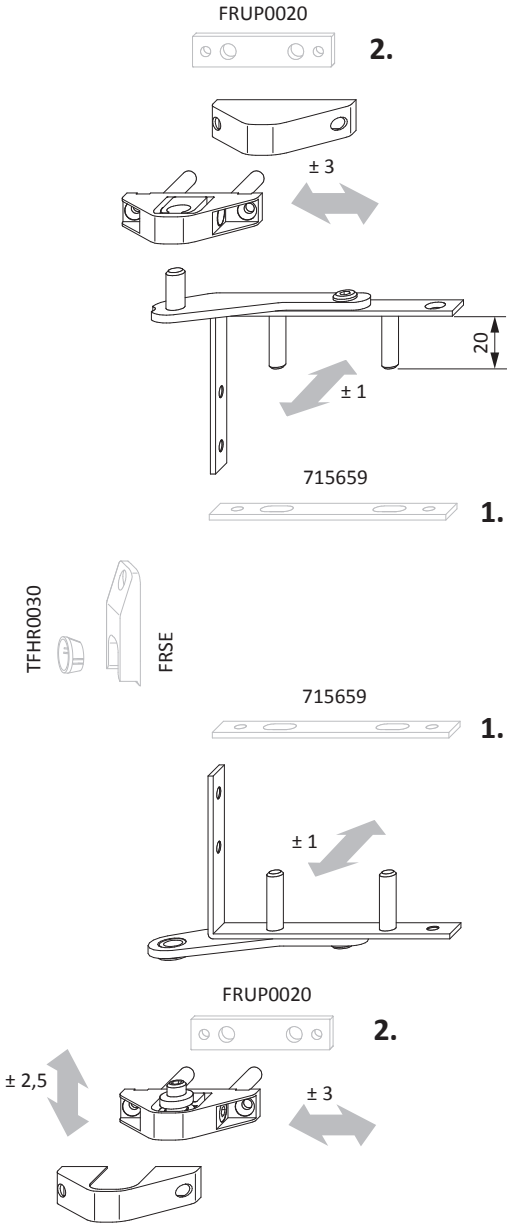
FRUP0020
2.
± 3
20
± 1
715659
1.
TFHR0030
FRSE
715659
1.
± 1
FRUP0020
2.
± 2,5
± 3

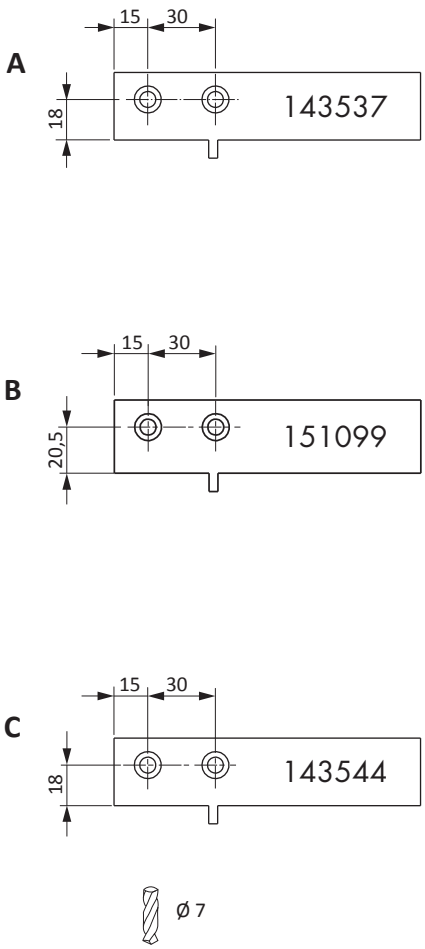
A
15
30
18
143537
B
15
30
20,5
151099
C
15
30
18
143544
Ø 7

## Sales information

| Description | Part number | Surface | Colour | Box quantity |
|---|---|---|---|---|
| top hinge 12/ | FBEL0400-10001_ | Titan Silver | without | 1 pc |
| | FBEL0400-10005_ | Titan Silver | without | 50 pcs |
| bottom hinge 12/ | FBEL0410-10001_ | Titan Silver | without | 1 pc |
| | FBEL0410-10005_ | Titan Silver | without | 50 pcs |
| bottom sash hinge rh. | FBFB0041-10001_ | Titan Silver | without | 1 pc |
| | FBFB0041-10005_ | Titan Silver | without | 50 pcs |
| | FBFB0041-10201_ | Titan Silver | RAL9003 | 1 pc |
| | FBFB0041-10205_ | Titan Silver | RAL9003 | 50 pcs |
| bottom sash hinge lh. | FBFB0042-10001_ | Titan Silver | without | 1 pc |
| | FBFB0042-10005_ | Titan Silver | without | 50 pcs |
| | FBFB0042-10201_ | Titan Silver | RAL9003 | 1 pc |
| | FBFB0042-10205_ | Titan Silver | RAL9003 | 50 pcs |
| top sash hinge rh. | FBFB0051-10001_ | Titan Silver | without | 1 pc |
| | FBFB0051-10005_ | Titan Silver | without | 50 pcs |
| | FBFB0051-10201_ | Titan Silver | RAL9003 | 1 pc |
| | FBFB0051-10205_ | Titan Silver | RAL9003 | 50 pcs |
| top sash hinge lh. | FBFB0052-10001_ | Titan Silver | without | 1 pc |
| | FBFB0052-10005_ | Titan Silver | without | 50 pcs |
| | FBFB0052-10201_ | Titan Silver | RAL9003 | 1 pc |
| | FBFB0052-10205_ | Titan Silver | RAL9003 | 50 pcs |
| cover cap DZB timber | FKDZ0010-00201_ | neutral | RAL9003 | 1 pc |
| | FKDZ0010-00206_ | neutral | RAL9003 | 100 pcs |
| | FKDZ0010-01101_ | neutral | RAL8019 | 1 pc |
| | FKDZ0010-01106_ | neutral | RAL8019 | 100 pcs |

## Drill holes and routings

- Use of jigs:
  create holes Ø 7mm for bottom hinge and sash hinge
  with following depths:
  track 38 mm, sash frame 27 mm

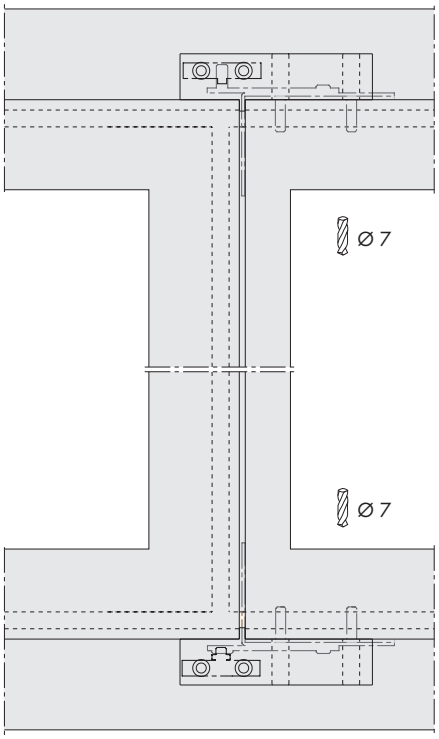


## Installation advice

- * track size inc. cover cap + 1 mm and packer 2 mm

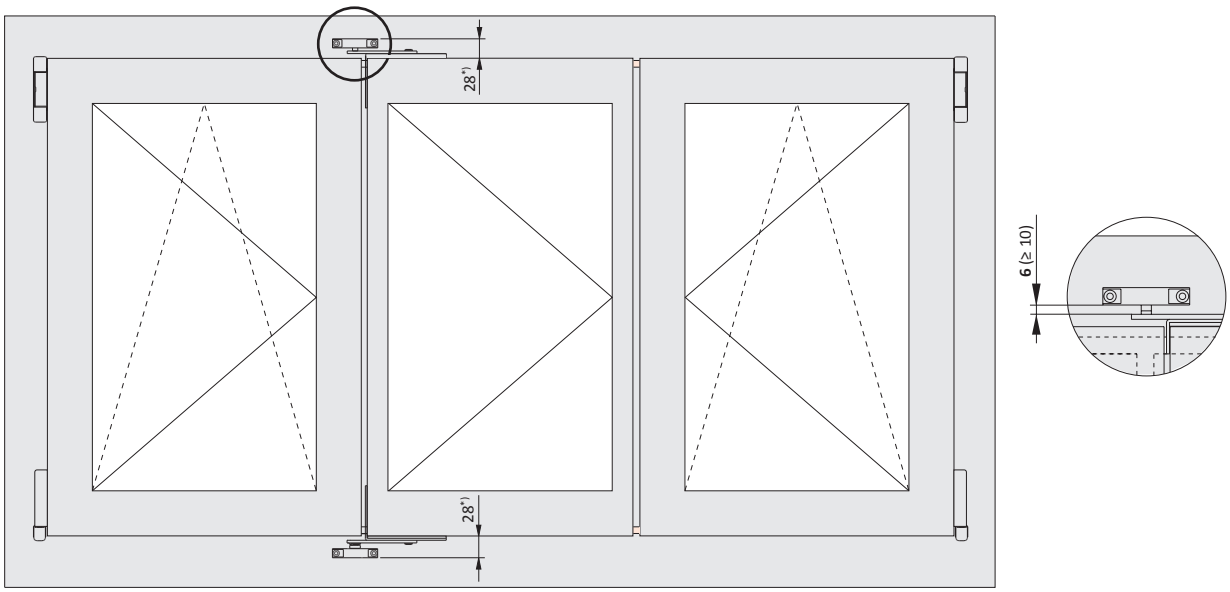

## Technical information

| Part number | Description |
|---|---|
| ZSFP0010-... | security cable 300 |
| ZSFP0020-... | catch plate 130 |



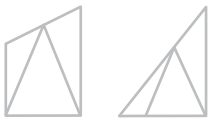

- For tilt sash elements in special shapes
- The positioning of the security cable/catch plate depends on the design
- Packer refer to PDB line item FRUP02

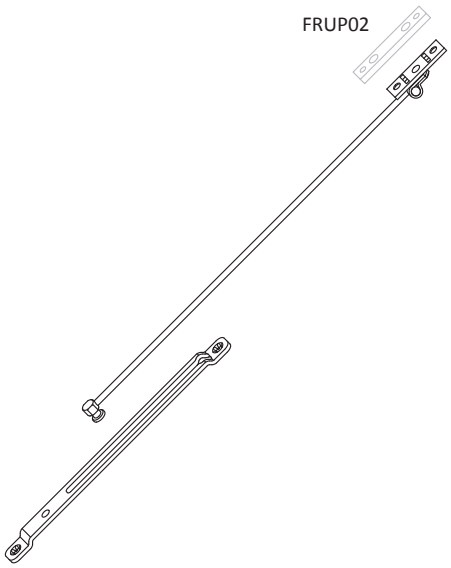


## Sales information

| Description | Part number | Surface | Colour | Box quantity |
|---|---|---|---|---|
| security cable 300 | ZSFP0010-10001_ | Titan Silver | without | 1 pc |
| | ZSFP0010-10002_ | Titan Silver | without | 10 pcs |
| catch plate 130 | ZSFP0020-10001_ | Titan Silver | without | 1 pc |
| | ZSFP0020-10002_ | Titan Silver | without | 10 pcs |

## Technical information

| Part number | Description |
|---|---|
| TKFE7011-... | cover cap FEB rh. |
| TKFE7012-... | cover cap FEB lh. |
| FKFE0011-... | cover cap FEB rh. |
| FKFE0012-... | cover cap FEB lh. |
| FKEO0010-... | cover cap EL O |
| FKEU0010-... | cover cap EL U |
| FKEL0010-... | cover cap EL-S U |
| FKWB0020-... | cover cap W timber |
| FKWB0010-... | cover cap W PVC |
| FKSL0010-... | cover cap S |
| FKSL0050-... | cover cap S RFA A0175 |
| FKWB0031-... | cover cap W RB rh. |
| FKWB0032-... | cover cap W RB lh. |
| FKSL0030-... | cover cap S 7 RB |

TKFE701_

FKFE001_

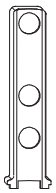
FKEO0010

FKEU0010

FKEL0010

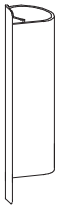
FKWB0020

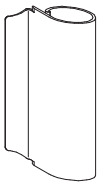
FKWB0010

FKSL0010

FKSL0050

FKWB003_

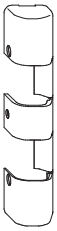
FKSL0030

## Sales information

| RAL9001 | | | |
|---|---|---|---|
| **Description** | **Part number** | **Surface** | **Box quantity** |
| cover cap FEB rh. | TKFE7011-00101_ | neutral | 1 pc |
| | TKFE7011-00106_ | neutral | 100 pcs |
| cover cap FEB lh. | TKFE7012-00101_ | neutral | 1 pc |
| | TKFE7012-00106_ | neutral | 100 pcs |
| cover cap FEB rh. | FKFE0011-00101_ | neutral | 1 pc |
| | FKFE0011-00106_ | neutral | 100 pcs |
| | FKFE0011-00108_ | neutral | 500 pcs |
| cover cap FEB lh. | FKFE0012-00101_ | neutral | 1 pc |
| | FKFE0012-00106_ | neutral | 100 pcs |
| | FKFE0012-00108_ | neutral | 500 pcs |
| cover cap EL O | FKEO0010-00101_ | neutral | 1 pc |
| | FKEO0010-00106_ | neutral | 100 pcs |
| | FKEO0010-00108_ | neutral | 500 pcs |
| cover cap EL U | FKEU0010-00101_ | neutral | 1 pc |
| | FKEU0010-00106_ | neutral | 100 pcs |
| | FKEU0010-00108_ | neutral | 500 pcs |
| cover cap EL-S U | FKEL0010-00101_ | neutral | 1 pc |
| | FKEL0010-00108_ | neutral | 500 pcs |
| cover cap W timber | FKWB0020-00101_ | neutral | 1 pc |
| | FKWB0020-00108_ | neutral | 500 pcs |
| cover cap W PVC | FKWB0010-00101_ | neutral | 1 pc |
| cover cap S | FKSL0010-00101_ | neutral | 1 pc |
| | FKSL0010-00106_ | neutral | 100 pcs |
| | FKSL0010-00108_ | neutral | 500 pcs |
| cover cap S RFA A0175 | - | | |
| cover cap W RB rh. | FKWB0031-L0101_ | lacquered | 1 pc |
| | FKWB0031-L0106_ | lacquered | 100 pcs |
| cover cap W RB lh. | FKWB0032-L0101_ | lacquered | 1 pc |
| | FKWB0032-L0106_ | lacquered | 100 pcs |
| cover cap S 7 RB | FKSL0030-L0101_ | lacquered | 1 pc |
| | FKSL0030-L0106_ | lacquered | 100 pcs |
| **RAL9003** | | | |
| **Description** | **Part number** | **Surface** | **Box quantity** |
| cover cap FEB rh. | TKFE7011-00201_ | neutral | 1 pc |
| | TKFE7011-00206_ | neutral | 100 pcs |
| cover cap FEB lh. | TKFE7012-00201_ | neutral | 1 pc |
| | TKFE7012-00206_ | neutral | 100 pcs |
| cover cap FEB rh. | FKFE0011-00201_ | neutral | 1 pc |
| | FKFE0011-00206_ | neutral | 100 pcs |
| | FKFE0011-00208_ | neutral | 500 pcs |
| cover cap FEB lh. | FKFE0012-00201_ | neutral | 1 pc |
| | FKFE0012-00206_ | neutral | 100 pcs |
| | FKFE0012-00208_ | neutral | 500 pcs |
| cover cap EL O | FKEO0010-00201_ | neutral | 1 pc |
| | FKEO0010-00206_ | neutral | 100 pcs |
| | FKEO0010-00208_ | neutral | 500 pcs |
| cover cap EL U | FKEU0010-00201_ | neutral | 1 pc |
| | FKEU0010-00206_ | neutral | 100 pcs |
| | FKEU0010-00208_ | neutral | 500 pcs |

## Sales information

| RAL9003 | | | |
|---|---|---|---|
| **Description** | **Part number** | **Surface** | **Box quantity** |
| cover cap EL-S U | FKEL0010-00201_ | neutral | 1 pc |
| | FKEL0010-00206_ | neutral | 100 pcs |
| | FKEL0010-00208_ | neutral | 500 pcs |
| cover cap W timber | FKWB0020-00201_ | neutral | 1 pc |
| | FKWB0020-00206_ | neutral | 100 pcs |
| | FKWB0020-00208_ | neutral | 500 pcs |
| cover cap W PVC | - | | |
| cover cap S | FKSL0010-00201_ | neutral | 1 pc |
| | FKSL0010-00206_ | neutral | 100 pcs |
| | FKSL0010-00208_ | neutral | 500 pcs |
| cover cap S RFA A0175 | FKSL0050-00201_ | neutral | 1 pc |
| | FKSL0050-00206_ | neutral | 100 pcs |
| | FKSL0050-00207_ | neutral | 250 pcs |
| cover cap W RB rh. | FKWB0031-00201_ | neutral | 1 pc |
| | FKWB0031-00206_ | neutral | 100 pcs |
| cover cap W RB lh. | FKWB0032-00201_ | neutral | 1 pc |
| | FKWB0032-00206_ | neutral | 100 pcs |
| cover cap S 7 RB | FKSL0030-00201_ | neutral | 1 pc |
| | FKSL0030-00206_ | neutral | 100 pcs |
| **RAL9016** | | | |
| **Description** | **Part number** | **Surface** | **Box quantity** |
| cover cap FEB rh. | TKFE7011-00401_ | neutral | 1 pc |
| | TKFE7011-00406_ | neutral | 100 pcs |
| | TKFE7011-00408_ | neutral | 500 pcs |
| cover cap FEB lh. | TKFE7012-00401_ | neutral | 1 pc |
| | TKFE7012-00406_ | neutral | 100 pcs |
| | TKFE7012-00408_ | neutral | 500 pcs |
| cover cap FEB rh. | FKFE0011-00401_ | neutral | 1 pc |
| | FKFE0011-00408_ | neutral | 500 pcs |
| cover cap FEB lh. | FKFE0012-00401_ | neutral | 1 pc |
| | FKFE0012-00408_ | neutral | 500 pcs |
| cover cap EL O | FKEO0010-00401_ | neutral | 1 pc |
| | FKEO0010-00408_ | neutral | 500 pcs |
| cover cap EL U | FKEU0010-00401_ | neutral | 1 pc |
| | FKEU0010-00406_ | neutral | 100 pcs |
| | FKEU0010-00408_ | neutral | 500 pcs |
| cover cap EL-S U | FKEL0010-00401_ | neutral | 1 pc |
| | FKEL0010-00408_ | neutral | 500 pcs |
| cover cap W timber | FKWB0020-00401_ | neutral | 1 pc |
| | FKWB0020-00408_ | neutral | 500 pcs |
| cover cap W PVC | - | | |
| cover cap S | FKSL0010-00401_ | neutral | 1 pc |
| | FKSL0010-00406_ | neutral | 100 pcs |
| | FKSL0010-00408_ | neutral | 500 pcs |
| cover cap S RFA A0175 | FKSL0050-00401_ | neutral | 1 pc |
| | FKSL0050-00407_ | neutral | 250 pcs |
| cover cap W RB rh. | FKWB0031-00401_ | neutral | 1 pc |
| | FKWB0031-00406_ | neutral | 100 pcs |
| cover cap W RB lh. | FKWB0032-00401_ | neutral | 1 pc |
| | FKWB0032-00406_ | neutral | 100 pcs |

## Sales information

| RAL9016 | | | |
|---|---|---|---|
| **Description** | **Part number** | **Surface** | **Box quantity** |
| cover cap S 7 RB | FKSL0030-00401_ | neutral | 1 pc |
| | FKSL0030-00406_ | neutral | 100 pcs |
| **RAL8019** | | | |
| **Description** | **Part number** | **Surface** | **Box quantity** |
| cover cap FEB rh. | TKFE7011-01101_ | neutral | 1 pc |
| | TKFE7011-01106_ | neutral | 100 pcs |
| cover cap FEB lh. | TKFE7012-01101_ | neutral | 1 pc |
| | TKFE7012-01106_ | neutral | 100 pcs |
| cover cap FEB rh. | FKFE0011-01101_ | neutral | 1 pc |
| | FKFE0011-01106_ | neutral | 100 pcs |
| | FKFE0011-01108_ | neutral | 500 pcs |
| cover cap FEB lh. | FKFE0012-01101_ | neutral | 1 pc |
| | FKFE0012-01106_ | neutral | 100 pcs |
| | FKFE0012-01108_ | neutral | 500 pcs |
| cover cap EL O | FKEO0010-01101_ | neutral | 1 pc |
| | FKEO0010-01106_ | neutral | 100 pcs |
| | FKEO0010-01108_ | neutral | 500 pcs |
| cover cap EL U | FKEU0010-01101_ | neutral | 1 pc |
| | FKEU0010-01106_ | neutral | 100 pcs |
| | FKEU0010-01108_ | neutral | 500 pcs |
| cover cap EL-S U | FKEL0010-01101_ | neutral | 1 pc |
| | FKEL0010-01106_ | neutral | 100 pcs |
| | FKEL0010-01108_ | neutral | 500 pcs |
| cover cap W timber | FKWB0020-01101_ | neutral | 1 pc |
| | FKWB0020-01108_ | neutral | 500 pcs |
| cover cap W PVC | - | | |
| cover cap S | FKSL0010-01101_ | neutral | 1 pc |
| | FKSL0010-01106_ | neutral | 100 pcs |
| | FKSL0010-01108_ | neutral | 500 pcs |
| cover cap S RFA A0175 | FKSL0050-01101_ | neutral | 1 pc |
| | FKSL0050-01107_ | neutral | 250 pcs |
| cover cap W RB rh. | FKWB0031-01101_ | neutral | 1 pc |
| | FKWB0031-01106_ | neutral | 100 pcs |
| cover cap W RB lh. | FKWB0032-01101_ | neutral | 1 pc |
| | FKWB0032-01106_ | neutral | 100 pcs |
| cover cap S 7 RB | FKSL0030-01101_ | neutral | 1 pc |
| | FKSL0030-01106_ | neutral | 100 pcs |
| **RAL8022** | | | |
| **Description** | **Part number** | **Surface** | **Box quantity** |
| cover cap FEB rh. | TKFE7011-01201_ | neutral | 1 pc |
| | TKFE7011-01206_ | neutral | 100 pcs |
| | TKFE7011-01208_ | neutral | 500 pcs |
| cover cap FEB lh. | TKFE7012-01201_ | neutral | 1 pc |
| | TKFE7012-01206_ | neutral | 100 pcs |
| | TKFE7012-01208_ | neutral | 500 pcs |
| cover cap FEB rh. | FKFE0011-01201_ | neutral | 1 pc |
| | FKFE0011-01206_ | neutral | 100 pcs |
| cover cap FEB lh. | FKFE0012-01201_ | neutral | 1 pc |
| | FKFE0012-01206_ | neutral | 100 pcs |

## Sales information

| RAL8022 | | | |
|---|---|---|---|
| **Description** | **Part number** | **Surface** | **Box quantity** |
| cover cap EL O | FKEO0010-01201_ | neutral | 1 pc |
| | FKEO0010-01208_ | neutral | 500 pcs |
| cover cap EL U | FKEU0010-01201_ | neutral | 1 pc |
| | FKEU0010-01206_ | neutral | 100 pcs |
| cover cap EL-S U | FKEL0010-01201_ | neutral | 1 pc |
| | FKEL0010-01206_ | neutral | 100 pcs |
| | FKEL0010-01208_ | neutral | 500 pcs |
| cover cap W timber | FKWB0020-01201_ | neutral | 1 pc |
| | FKWB0020-01208_ | neutral | 500 pcs |
| cover cap W PVC | - | | |
| cover cap S | FKSL0010-01201_ | neutral | 1 pc |
| | FKSL0010-01206_ | neutral | 100 pcs |
| cover cap S RFA A0175 | FKSL0050-01201_ | neutral | 1 pc |
| | FKSL0050-01207_ | neutral | 250 pcs |
| cover cap W RB rh. | FKWB0031-01201_ | neutral | 1 pc |
| | FKWB0031-01206_ | neutral | 100 pcs |
| cover cap W RB lh. | FKWB0032-01201_ | neutral | 1 pc |
| | FKWB0032-01206_ | neutral | 100 pcs |
| cover cap S 7 RB | FKSL0030-01201_ | neutral | 1 pc |
| | FKSL0030-01206_ | neutral | 100 pcs |
| **EV1/EV1** | | | |
| **Description** | **Part number** | **Surface** | **Box quantity** |
| cover cap FEB rh. | TKFE7011-L2401_ | lacquered | 1 pc |
| | TKFE7011-L2406_ | lacquered | 100 pcs |
| | TKFE7011-L2408_ | lacquered | 500 pcs |
| cover cap FEB lh. | TKFE7012-L2401_ | lacquered | 1 pc |
| | TKFE7012-L2406_ | lacquered | 100 pcs |
| | TKFE7012-L2408_ | lacquered | 500 pcs |
| cover cap FEB rh. | FKFE0011-L2401_ | lacquered | 1 pc |
| | FKFE0011-L2408_ | lacquered | 500 pcs |
| cover cap FEB lh. | FKFE0012-L2401_ | lacquered | 1 pc |
| | FKFE0012-L2408_ | lacquered | 500 pcs |
| cover cap EL O | FKEO0010-L2401_ | lacquered | 1 pc |
| | FKEO0010-L2408_ | lacquered | 500 pcs |
| cover cap EL U | FKEU0010-L2401_ | lacquered | 1 pc |
| | FKEU0010-L2406_ | lacquered | 100 pcs |
| cover cap EL-S U | FKEL0010-L2401_ | lacquered | 1 pc |
| | FKEL0010-L2406_ | lacquered | 100 pcs |
| cover cap W timber | FKWB0020-L2401_ | lacquered | 1 pc |
| | FKWB0020-L2408_ | lacquered | 500 pcs |
| cover cap W PVC | - | | |
| cover cap S | FKSL0010-L2401_ | lacquered | 1 pc |
| | FKSL0010-L2406_ | lacquered | 100 pcs |
| cover cap S RFA A0175 | FKSL0050-L2401_ | lacquered | 1 pc |
| | FKSL0050-L2407_ | lacquered | 250 pcs |
| cover cap W RB rh. | FKWB0031-L2401_ | lacquered | 1 pc |
| | FKWB0031-L2406_ | lacquered | 100 pcs |
| cover cap W RB lh. | FKWB0032-L2401_ | lacquered | 1 pc |
| | FKWB0032-L2406_ | lacquered | 100 pcs |

## Sales information

| EV1/EV1 | | | |
|---|---|---|---|
| **Description** | **Part number** | **Surface** | **Box quantity** |
| cover cap S 7 RB | FKSL0030-L2401_ | lacquered | 1 pc |
| | FKSL0030-L2406_ | lacquered | 100 pcs |
| **Si-silver** | | | |
| **Description** | **Part number** | **Surface** | **Box quantity** |
| cover cap FEB rh. | TKFE7011-L2501_ | lacquered | 1 pc |
| | TKFE7011-L2506_ | lacquered | 100 pcs |
| cover cap FEB lh. | TKFE7012-L2501_ | lacquered | 1 pc |
| | TKFE7012-L2506_ | lacquered | 100 pcs |
| cover cap FEB rh. | FKFE0011-L2501_ | lacquered | 1 pc |
| | FKFE0011-L2506_ | lacquered | 100 pcs |
| | FKFE0011-L2508_ | lacquered | 500 pcs |
| cover cap FEB lh. | FKFE0012-L2501_ | lacquered | 1 pc |
| | FKFE0012-L2506_ | lacquered | 100 pcs |
| | FKFE0012-L2508_ | lacquered | 500 pcs |
| cover cap EL O | FKEO0010-L2501_ | lacquered | 1 pc |
| | FKEO0010-L2506_ | lacquered | 100 pcs |
| | FKEO0010-L2508_ | lacquered | 500 pcs |
| cover cap EL U | FKEU0010-L2501_ | lacquered | 1 pc |
| | FKEU0010-L2506_ | lacquered | 100 pcs |
| | FKEU0010-L2508_ | lacquered | 500 pcs |
| cover cap EL-S U | FKEL0010-L2501_ | lacquered | 1 pc |
| | FKEL0010-L2506_ | lacquered | 100 pcs |
| cover cap W timber | FKWB0020-L2501_ | lacquered | 1 pc |
| | FKWB0020-L2506_ | lacquered | 100 pcs |
| | FKWB0020-L2508_ | lacquered | 500 pcs |
| cover cap W PVC | - | | |
| cover cap S | FKSL0010-L2501_ | lacquered | 1 pc |
| | FKSL0010-L2506_ | lacquered | 100 pcs |
| | FKSL0010-L2508_ | lacquered | 500 pcs |
| cover cap S RFA A0175 | FKSL0050-L2501_ | lacquered | 1 pc |
| | FKSL0050-L2507_ | lacquered | 250 pcs |
| cover cap W RB rh. | FKWB0031-L2501_ | lacquered | 1 pc |
| | FKWB0031-L2506_ | lacquered | 100 pcs |
| cover cap W RB lh. | FKWB0032-L2501_ | lacquered | 1 pc |
| | FKWB0032-L2506_ | lacquered | 100 pcs |
| cover cap S 7 RB | FKSL0030-L2501_ | lacquered | 1 pc |
| | FKSL0030-L2506_ | lacquered | 100 pcs |
| **Si-mid.bronze** | | | |
| **Description** | **Part number** | **Surface** | **Box quantity** |
| cover cap FEB rh. | TKFE7011-03101_ | neutral | 1 pc |
| | TKFE7011-03106_ | neutral | 100 pcs |
| cover cap FEB lh. | TKFE7012-03101_ | neutral | 1 pc |
| | TKFE7012-03106_ | neutral | 100 pcs |
| cover cap FEB rh. | FKFE0011-03101_ | neutral | 1 pc |
| | FKFE0011-03106_ | neutral | 100 pcs |
| cover cap FEB lh. | FKFE0012-03101_ | neutral | 1 pc |
| | FKFE0012-03106_ | neutral | 100 pcs |
| cover cap EL O | FKEO0010-03101_ | neutral | 1 pc |
| | FKEO0010-03106_ | neutral | 100 pcs |

## Sales information

| Si-mid.bronze | | | |
|---|---|---|---|
| **Description** | **Part number** | **Surface** | **Box quantity** |
| cover cap EL U | FKEU0010-03101_ | neutral | 1 pc |
| | FKEU0010-03106_ | neutral | 100 pcs |
| cover cap EL-S U | FKEL0010-03101_ | neutral | 1 pc |
| | FKEL0010-03106_ | neutral | 100 pcs |
| cover cap W timber | FKWB0020-03101_ | neutral | 1 pc |
| | FKWB0020-03106_ | neutral | 100 pcs |
| cover cap W PVC | - | | |
| cover cap S | FKSL0010-03101_ | neutral | 1 pc |
| | FKSL0010-03106_ | neutral | 100 pcs |
| cover cap S RFA A0175 | FKSL0050-03101_ | neutral | 1 pc |
| | FKSL0050-03107_ | neutral | 250 pcs |
| cover cap W RB rh. | FKWB0031-L3101_ | lacquered | 1 pc |
| | FKWB0031-L3106_ | lacquered | 100 pcs |
| cover cap W RB lh. | FKWB0032-L3101_ | lacquered | 1 pc |
| | FKWB0032-L3106_ | lacquered | 100 pcs |
| cover cap S 7 RB | FKSL0030-L3101_ | lacquered | 1 pc |
| | FKSL0030-L3106_ | lacquered | 100 pcs |
| **titan m. bright** | | | |
| **Description** | **Part number** | **Surface** | **Box quantity** |
| cover cap FEB rh. | TKFE7011-L3401_ | lacquered | 1 pc |
| | TKFE7011-L3406_ | lacquered | 100 pcs |
| cover cap FEB lh. | TKFE7012-L3401_ | lacquered | 1 pc |
| | TKFE7012-L3406_ | lacquered | 100 pcs |
| cover cap FEB rh. | FKFE0011-L3401_ | lacquered | 1 pc |
| | FKFE0011-L3406_ | lacquered | 100 pcs |
| cover cap FEB lh. | FKFE0012-L3401_ | lacquered | 1 pc |
| | FKFE0012-L3406_ | lacquered | 100 pcs |
| cover cap EL O | FKEO0010-L3401_ | lacquered | 1 pc |
| | FKEO0010-L3406_ | lacquered | 100 pcs |
| cover cap EL U | FKEU0010-L3401_ | lacquered | 1 pc |
| | FKEU0010-L3406_ | lacquered | 100 pcs |
| cover cap EL-S U | FKEL0010-L3401_ | lacquered | 1 pc |
| | FKEL0010-L3406_ | lacquered | 100 pcs |
| cover cap W timber | FKWB0020-L3401_ | lacquered | 1 pc |
| | FKWB0020-L3406_ | lacquered | 100 pcs |
| cover cap W PVC | - | | |
| cover cap S | FKSL0010-L3401_ | lacquered | 1 pc |
| | FKSL0010-L3406_ | lacquered | 100 pcs |
| cover cap S RFA A0175 | FKSL0050-L3401_ | lacquered | 1 pc |
| cover cap W RB rh. | FKWB0031-L3401_ | lacquered | 1 pc |
| | FKWB0031-L3406_ | lacquered | 100 pcs |
| cover cap W RB lh. | FKWB0032-L3401_ | lacquered | 1 pc |
| | FKWB0032-L3406_ | lacquered | 100 pcs |
| cover cap S 7 RB | FKSL0030-L3401_ | lacquered | 1 pc |
| | FKSL0030-L3406_ | lacquered | 100 pcs |
| **matt gold** | | | |
| **Description** | **Part number** | **Surface** | **Box quantity** |
| cover cap FEB rh. | TKFE7011-L3701_ | lacquered | 1 pc |
| | TKFE7011-L3706_ | lacquered | 100 pcs |

## Sales information

| matt gold | | | |
|---|---|---|---|
| **Description** | **Part number** | **Surface** | **Box quantity** |
| cover cap FEB lh. | TKFE7012-L3701_ | lacquered | 1 pc |
| | TKFE7012-L3706_ | lacquered | 100 pcs |
| cover cap FEB rh. | FKFE0011-L3701_ | lacquered | 1 pc |
| | FKFE0011-L3706_ | lacquered | 100 pcs |
| cover cap FEB lh. | FKFE0012-L3701_ | lacquered | 1 pc |
| | FKFE0012-L3706_ | lacquered | 100 pcs |
| cover cap EL O | FKEO0010-L3701_ | lacquered | 1 pc |
| | FKEO0010-L3706_ | lacquered | 100 pcs |
| cover cap EL U | FKEU0010-L3701_ | lacquered | 1 pc |
| | FKEU0010-L3706_ | lacquered | 100 pcs |
| cover cap EL-S U | FKEL0010-L3701_ | lacquered | 1 pc |
| | FKEL0010-L3706_ | lacquered | 100 pcs |
| cover cap W timber | FKWB0020-L3701_ | lacquered | 1 pc |
| | FKWB0020-L3706_ | lacquered | 100 pcs |
| cover cap W PVC | - | | |
| cover cap S | FKSL0010-L3701_ | lacquered | 1 pc |
| | FKSL0010-L3706_ | lacquered | 100 pcs |
| cover cap S RFA A0175 | - | | |
| cover cap W RB rh. | FKWB0031-L3701_ | lacquered | 1 pc |
| cover cap W RB lh. | FKWB0032-L3701_ | lacquered | 1 pc |
| cover cap S 7 RB | FKSL0030-L3701_ | lacquered | 1 pc |
| | FKSL0030-L3706_ | lacquered | 100 pcs |
| **gold shining** | | | |
| **Description** | **Part number** | **Surface** | **Box quantity** |
| cover cap FEB rh. | TKFE7011-L3801_ | lacquered | 1 pc |
| | TKFE7011-L3806_ | lacquered | 100 pcs |
| cover cap FEB lh. | TKFE7012-L3801_ | lacquered | 1 pc |
| | TKFE7012-L3806_ | lacquered | 100 pcs |
| cover cap FEB rh. | FKFE0011-L3801_ | lacquered | 1 pc |
| | FKFE0011-L3806_ | lacquered | 100 pcs |
| cover cap FEB lh. | FKFE0012-L3801_ | lacquered | 1 pc |
| | FKFE0012-L3806_ | lacquered | 100 pcs |
| cover cap EL O | FKEO0010-L3801_ | lacquered | 1 pc |
| | FKEO0010-L3806_ | lacquered | 100 pcs |
| cover cap EL U | FKEU0010-L3801_ | lacquered | 1 pc |
| | FKEU0010-L3806_ | lacquered | 100 pcs |
| cover cap EL-S U | FKEL0010-L3801_ | lacquered | 1 pc |
| | FKEL0010-L3806_ | lacquered | 100 pcs |
| cover cap W timber | FKWB0020-L3801_ | lacquered | 1 pc |
| | FKWB0020-L3806_ | lacquered | 100 pcs |
| cover cap W PVC | - | | |
| cover cap S | FKSL0010-L3801_ | lacquered | 1 pc |
| | FKSL0010-L3806_ | lacquered | 100 pcs |
| cover cap S RFA A0175 | - | | |
| cover cap W RB rh. | FKWB0031-L3801_ | lacquered | 1 pc |
| | FKWB0031-L3806_ | lacquered | 100 pcs |
| cover cap W RB lh. | FKWB0032-L3801_ | lacquered | 1 pc |
| | FKWB0032-L3806_ | lacquered | 100 pcs |
| cover cap S 7 RB | FKSL0030-L3801_ | lacquered | 1 pc |
| | FKSL0030-L3806_ | lacquered | 100 pcs |

## Sales information

| SI-old gold | | | |
|---|---|---|---|
| **Description** | **Part number** | **Surface** | **Box quantity** |
| cover cap FEB rh. | TKFE7011-0H001_ | neutral | 1 pc |
| | TKFE7011-0H006_ | neutral | 100 pcs |
| cover cap FEB lh. | TKFE7012-0H001_ | neutral | 1 pc |
| | TKFE7012-0H006_ | neutral | 100 pcs |
| cover cap FEB rh. | FKFE0011-0H001_ | neutral | 1 pc |
| | FKFE0011-0H006_ | neutral | 100 pcs |
| cover cap FEB lh. | FKFE0012-0H001_ | neutral | 1 pc |
| | FKFE0012-0H006_ | neutral | 100 pcs |
| cover cap EL O | FKEO0010-0H001_ | neutral | 1 pc |
| | FKEO0010-0H006_ | neutral | 100 pcs |
| | FKEO0010-LH001_ | lacquered | 1 pc |
| | FKEO0010-LH006_ | lacquered | 100 pcs |
| cover cap EL U | FKEU0010-LH001_ | lacquered | 1 pc |
| | FKEU0010-LH006_ | lacquered | 100 pcs |
| cover cap EL-S U | FKEL0010-0H001_ | neutral | 1 pc |
| | FKEL0010-0H006_ | neutral | 100 pcs |
| | FKEL0010-LH001_ | lacquered | 1 pc |
| | FKEL0010-LH006_ | lacquered | 100 pcs |
| cover cap W timber | FKWB0020-0H001_ | neutral | 1 pc |
| | FKWB0020-0H006_ | neutral | 100 pcs |
| cover cap W PVC | - | | |
| cover cap S | FKSL0010-0H001_ | neutral | 1 pc |
| | FKSL0010-0H006_ | neutral | 100 pcs |
| | FKSL0010-LH001_ | lacquered | 1 pc |
| | FKSL0010-LH006_ | lacquered | 100 pcs |
| cover cap S RFA A0175 | FKSL0050-LH001_ | lacquered | 1 pc |
| | FKSL0050-LH006_ | lacquered | 100 pcs |
| cover cap W RB rh. | FKWB0031-0H001_ | neutral | 1 pc |
| | FKWB0031-0H006_ | neutral | 100 pcs |
| | FKWB0031-LH001_ | lacquered | 1 pc |
| | FKWB0031-LH006_ | lacquered | 100 pcs |
| cover cap W RB lh. | FKWB0032-0H001_ | neutral | 1 pc |
| | FKWB0032-0H006_ | neutral | 100 pcs |
| | FKWB0032-LH001_ | lacquered | 1 pc |
| | FKWB0032-LH006_ | lacquered | 100 pcs |
| cover cap S 7 RB | FKSL0030-0H001_ | neutral | 1 pc |
| | FKSL0030-0H006_ | neutral | 100 pcs |
| **F9 titan m. dark** | | | |
| **Description** | **Part number** | **Surface** | **Box quantity** |
| cover cap FEB rh. | TKFE7011-LH401_ | lacquered | 1 pc |
| | TKFE7011-LH406_ | lacquered | 100 pcs |
| cover cap FEB lh. | TKFE7012-LH401_ | lacquered | 1 pc |
| | TKFE7012-LH406_ | lacquered | 100 pcs |
| cover cap FEB rh. | FKFE0011-LH401_ | lacquered | 1 pc |
| | FKFE0011-LH408_ | lacquered | 500 pcs |
| cover cap FEB lh. | FKFE0012-LH401_ | lacquered | 1 pc |
| | FKFE0012-LH408_ | lacquered | 500 pcs |
| cover cap EL O | FKEO0010-LH401_ | lacquered | 1 pc |
| | FKEO0010-LH408_ | lacquered | 500 pcs |

## Sales information

| F9 titan m. dark | | | |
|---|---|---|---|
| **Description** | **Part number** | **Surface** | **Box quantity** |
| cover cap EL U | FKEU0010-LH401_ | lacquered | 1 pc |
| | FKEU0010-LH408_ | lacquered | 500 pcs |
| cover cap EL-S U | FKEL0010-LH401_ | lacquered | 1 pc |
| | FKEL0010-LH406_ | lacquered | 100 pcs |
| | FKEL0010-LH408_ | lacquered | 500 pcs |
| cover cap W timber | FKWB0020-LH401_ | lacquered | 1 pc |
| | FKWB0020-LH408_ | lacquered | 500 pcs |
| cover cap W PVC | - | | |
| cover cap S | FKSL0010-LH401_ | lacquered | 1 pc |
| | FKSL0010-LH408_ | lacquered | 500 pcs |
| cover cap S RFA A0175 | FKSL0050-LH401_ | lacquered | 1 pc |
| | FKSL0050-LH406_ | lacquered | 100 pcs |
| cover cap W RB rh. | FKWB0031-LH401_ | lacquered | 1 pc |
| | FKWB0031-LH406_ | lacquered | 100 pcs |
| cover cap W RB lh. | FKWB0032-LH401_ | lacquered | 1 pc |
| | FKWB0032-LH406_ | lacquered | 100 pcs |
| cover cap S 7 RB | FKSL0030-LH401_ | lacquered | 1 pc |
| | FKSL0030-LH406_ | lacquered | 100 pcs |
| **Si-white-alu** | | | |
| **Description** | **Part number** | **Surface** | **Box quantity** |
| cover cap FEB rh. | TKFE7011-0M201_ | neutral | 1 pc |
| | TKFE7011-0M206_ | neutral | 100 pcs |
| cover cap FEB lh. | TKFE7012-0M201_ | neutral | 1 pc |
| | TKFE7012-0M206_ | neutral | 100 pcs |
| cover cap FEB rh. | FKFE0011-0M201_ | neutral | 1 pc |
| | FKFE0011-0M206_ | neutral | 100 pcs |
| cover cap FEB lh. | FKFE0012-0M201_ | neutral | 1 pc |
| | FKFE0012-0M206_ | neutral | 100 pcs |
| cover cap EL O | - | | |
| cover cap EL U | - | | |
| cover cap EL-S U | FKEL0010-0M201_ | neutral | 1 pc |
| | FKEL0010-0M206_ | neutral | 100 pcs |
| cover cap W timber | FKWB0020-0M201_ | neutral | 1 pc |
| | FKWB0020-0M206_ | neutral | 100 pcs |
| cover cap W PVC | - | | |
| cover cap S | - | | |
| cover cap S RFA A0175 | - | | |
| cover cap W RB rh. | - | | |
| cover cap W RB lh. | - | | |
| cover cap S 7 RB | - | | |
| **special colour** | | | |
| **Description** | **Part number** | **Surface** | **Box quantity** |
| cover cap FEB rh. | TKFE7011-LV001_ | lacquered | 1 pc |
| cover cap FEB lh. | TKFE7012-LV001_ | lacquered | 1 pc |
| cover cap FEB rh. | FKFE0011-LV001_ | lacquered | 1 pc |
| cover cap FEB lh. | FKFE0012-LV001_ | lacquered | 1 pc |
| cover cap EL O | FKEO0010-LV001_ | lacquered | 1 pc |
| cover cap EL U | FKEU0010-LV001_ | lacquered | 1 pc |
| cover cap EL-S U | FKEL0010-LV001_ | lacquered | 1 pc |
| cover cap W timber | FKWB0020-LV001_ | lacquered | 1 pc |

## Sales information

| special colour | | | |
|---|---|---|---|
| **Description** | **Part number** | **Surface** | **Box quantity** |
| cover cap W PVC | - | | |
| cover cap S | FKSL0010-LV001_ | lacquered | 1 pc |
| cover cap S RFA A0175 | - | | |
| cover cap W RB rh. | FKWB0031-LV001_ | lacquered | 1 pc |
| cover cap W RB lh. | FKWB0032-LV001_ | lacquered | 1 pc |
| cover cap S 7 RB | - | | |

| Description | Material | Page |
|---|---|---|
| window frame clearance | | 1.4 - 4 |
| drill holes, base plate 24 - groove axis 13 mm | | 1.4 - 5 |
| drill holes, base plate 24 - groove axis 9 mm | | 1.4 - 6 |
| millings, base plate 24 - groove axis 9 mm - airgap 4 mm | | |
| drill holes, base plate 30 - groove axis 13 mm | | 1.4 - 8 |
| drill holes, base plate 34 - groove axis 13 mm | | 1.4 - 9 |
| drill holes load transfer | | 1.4 - 10 |
| corner hinge AX | TBEB4011, TBEB4012, TBEB4001, TBEB4002 | 1.4 - 11 |
| bottom hinge AX 24 | TBEV4011, TBEV4012, TBEV4001, TBEV4002, TKEL4021, TKEL4022 | 1.4 - 12 |
| bottom hinge AX 24 D8 | TBEV4061, TBEV4062, TBEV4051, TBEV4052, TBAV4010, TKEL4021, TKEL4022 | 1.4 - 13 |
| bottom hinge AX 24 DF/3 | TBEV4111, TBEV4112, TBEV4101, TBEV4102 | 1.4 - 15 |
| bottom hinge AX 30 | TBEV4021, TBEV4022, TKEL4031, TKEL4032 | 1.4 - 16 |
| bottom hinge AX 30 D8 | TBEV4071, TBEV4072, TBAV4010, TKEL4031, TKEL4032 | 1.4 - 17 |
| bottom hinge AX 30 DF/3 | TBEV4121, TBEV4122 | 1.4 - 18 |
| bottom hinge AX 34 | TBEV4091, TBEV4092, TBAV4010, TKEL4041, TKEL4042 | 1.4 - 19 |
| bottom hinge AX 24 C | TBEV4201, TBEV4202, TBEV4241, TBEV4242, TBEV4211, TBEV4212, TBEV4231, TBEV4232, TBEV4221, TBEV4222, TKEL4021, TKEL4022 | 1.4 - 21 |
| stay sash part AF AX | TSSV4000, TSSV0310, TSSV0320, TSSV0330 | 1.4 - 23 |
| stay sash part DF AX | TSSV3020 | 1.4 - 25 |
| stay sash part AF AX UE | TSSV4010 | 1.4 - 26 |
| stay arm AX 24 | TSAV4111, TSAV4112, TSAV4011, TSAV4012, TSAV4121, TSAV4122, TSAV4021, TSAV4022, TSAV4131, TSAV4132, TSAV4031, TSAV4032, TSAV4141, TSAV4142, TSAV4041, TSAV4042 | 1.4 - 27 |

| Description | Material | Page |
|---|---|---|
| stay arm AX 30 | TSAV4211, TSAV4212, TSAV4221, TSAV4222, TSAV4231, TSAV4232, TSAV4241, TSAV4242 | 1.4 - 29 |
| stay arm AX 34 | TSAV4911, TSAV4912, TSAV4921, TSAV4922, TSAV4931, TSAV4932, TSAV4941, TSAV4942 | 1.4 - 31 |
| stay arm AX 24 C | TSAV4411, TSAV4412, TSAV4811, TSAV4812, TSAV4511, TSAV4512, TSAV4711, TSAV4712, TSAV4611, TSAV4612, TSAV4421, TSAV4422, TSAV4821, TSAV4822, TSAV4521, TSAV4522, TSAV4721, TSAV4722, TSAV4621, TSAV4622, TSAV4431, TSAV4432, TSAV4831, TSAV4832, TSAV4531, TSAV4532, TSAV4731, TSAV4732, TSAV4631, TSAV4632, TSAV4441, TSAV4442, TSAV4841, TSAV4842, TSAV4541, TSAV4542, TSAV4741, TSAV4742, TSAV4641, TSAV4642 | 1.4 - 33 |
| stay arm TBT AX 24 | TSAV4151, TSAV4152, TSAV4051, TSAV4052, TSAV4161, TSAV4162, TSAV4061, TSAV4062, TSAV4171, TSAV4172, TSAV4071, TSAV4072, TSAV4181, TSAV4182, TSAV4081, TSAV4082 | 1.4 - 37 |
| stay arm TBT AX 30 | TSAV4251, TSAV4252, TSAV4261, TSAV4262, TSAV4271, TSAV4272, TSAV4281, TSAV4282 | 1.4 - 39 |
| stay arm TBT AX 34 | TSAV4951, TSAV4952, TSAV4961, TSAV4962, TSAV4971, TSAV4972, TSAV4981, TSAV4982 | 1.4 - 41 |

| Description | Material | Page |
|---|---|---|
| stay arm TBT AX 24 C | TSAV4451, TSAV4452, TSAV4851, TSAV4852, TSAV4551, TSAV4552, TSAV4751, TSAV4752, TSAV4651, TSAV4652, TSAV4461, TSAV4462, TSAV4861, TSAV4862, TSAV4561, TSAV4562, TSAV4761, TSAV4762, TSAV4661, TSAV4662, TSAV4471, TSAV4472, TSAV4871, TSAV4872, TSAV4571, TSAV4572, TSAV4771, TSAV4772, TSAV4671, TSAV4672, TSAV4481, TSAV4482, TSAV4881, TSAV4882, TSAV4581, TSAV4582, TSAV4781, TSAV4782, TSAV4681, TSAV4682 | 1.4 - 43 |
| stay arm AX 24 DF | TSAV4191, TSAV4192, TSAV4091, TSAV4092 | 1.4 - 47 |
| stay arm AX 24 DF/3 | TSAV4101, TSAV4102, TSAV4201, TSAV4202 | 1.4 - 48 |
| stay arm AX 30 DF | TSAV4291, TSAV4292 | 1.4 - 49 |
| stay arm AX 30 DF/3 | TSAV4301, TSAV4302 | 1.4 - 50 |
| stay arm DF AX 34 | TSAV4991, TSAV4992 | 1.4 - 51 |
| stay arm DF AX 24 C | TSAV4491, TSAV4492, TSAV4891, TSAV4892, TSAV4591, TSAV4592, TSAV4791, TSAV4792, TSAV4691, TSAV4692 | 1.4 - 52 |
| tilt restrictor V-V | TFKB0040, TFKB0050 | 1.4 - 54 |
| S-screw | ZXSC0010, ZXSC0020 | 1.4 - 55 |
| grub screw AX C | ZXSC4200 | 1.4 - 56 |
| load transfer axxent 24+ | TMZV4000 | 1.4 - 57 |

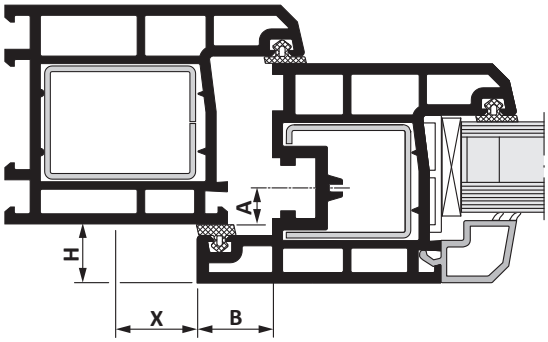


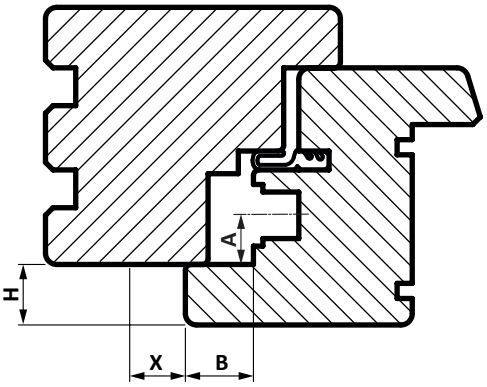


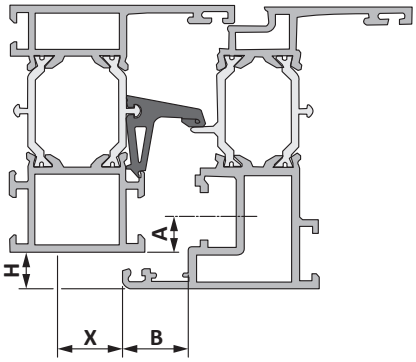


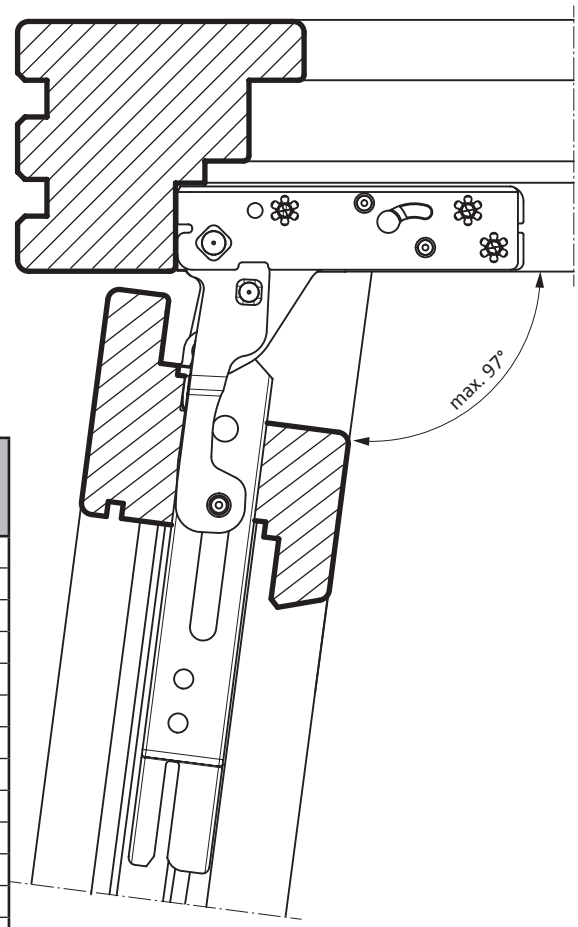


| Groove axis A | Rebate width B | Rebate height H | Frame clearance X |
|---|---|---|---|
| 9/13 | 18 | 16 | **6,5** |
| 9/13 | 18 | 17 | **7,5** |
| 9/13 | 18 | 18 | **8,5** |
| 9/13 | 18 | 19 | **9,5** |
| 9/13 | 18 | 20 | **10,5** |
| 9/13 | 18 | 21 | **11,5** |
| 9/13 | 18 | 22 | **12,5** |
| 9/13 | 18 | 23 | **13,5** |
| 9/13 | 18 | 24 | **14,5** |
| 9/13 | 20 | 16 | **5** |
| 9/13 | 20 | 17 | **6** |
| 9/13 | 20 | 18 | **7** |
| 9/13 | 20 | 19 | **8** |
| 9/13 | 20 | 20 | **9** |
| 9/13 | 20 | 21 | **10** |
| 9/13 | 20 | 22 | **11** |
| 9/13 | 20 | 23 | **12** |
| 9/13 | 20 | 24 | **13** |
| 9/13 | 21 | 16 | **4,5** |
| 9/13 | 21 | 17 | **5,5** |
| 9/13 | 21 | 18 | **6,5** |
| 9/13 | 21 | 19 | **7,5** |
| 9/13 | 21 | 20 | **8,5** |
| 9/13 | 21 | 21 | **9** |
| 9/13 | 21 | 22 | **10** |
| 9/13 | 21 | 23 | **11** |
| 9/13 | 21 | 24 | **12** |

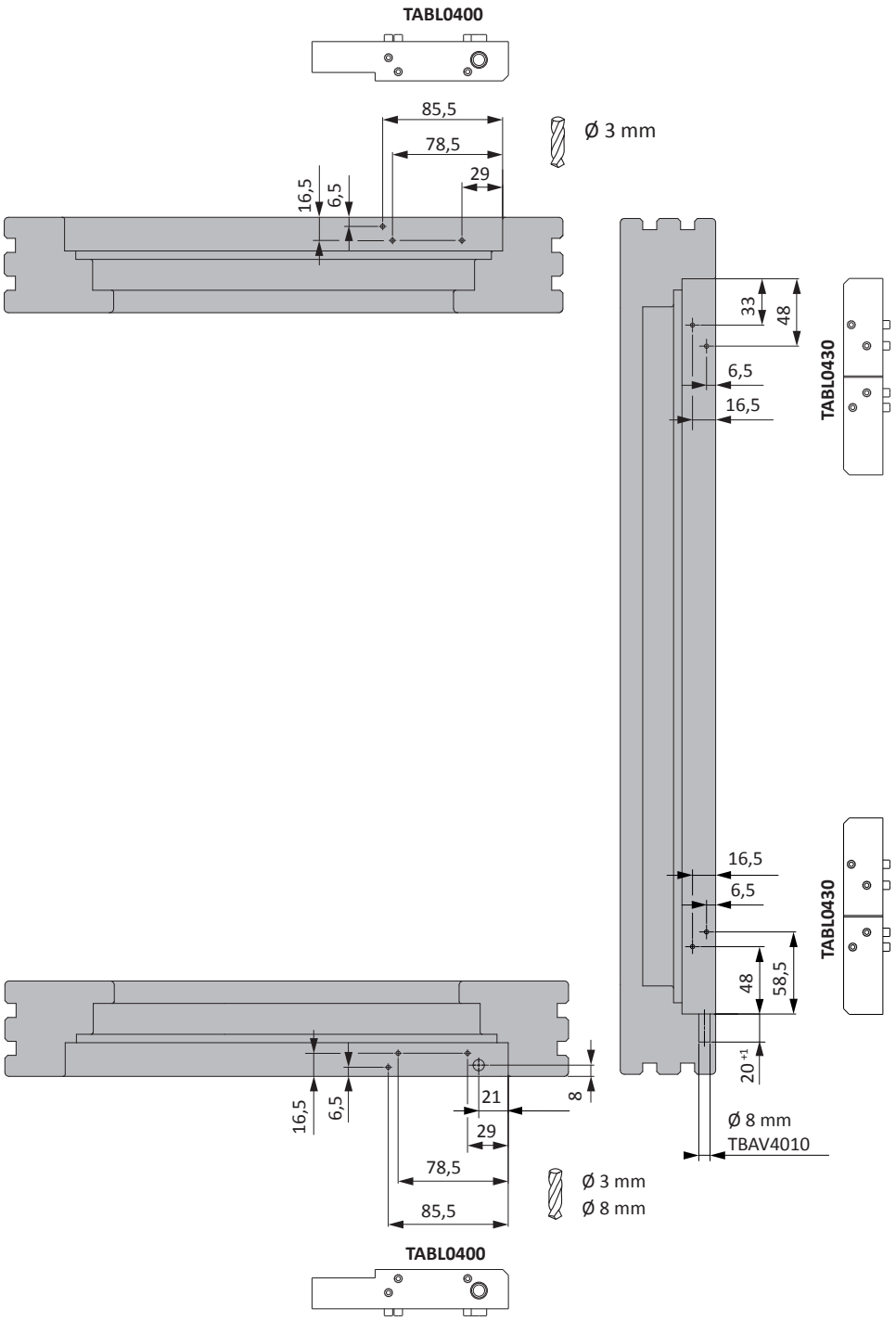
TABL0400
85,5
78,5
29
16,5
6,5
Ø 3 mm
33
48
6,5
16,5
TABL0430
16,5
6,5
48
58,5
TABL0430
20 +1
Ø 8 mm
TBAV4010
16,5
6,5
21
29
8
78,5
85,5
Ø 3 mm
Ø 8 mm
TABL0400

1.4

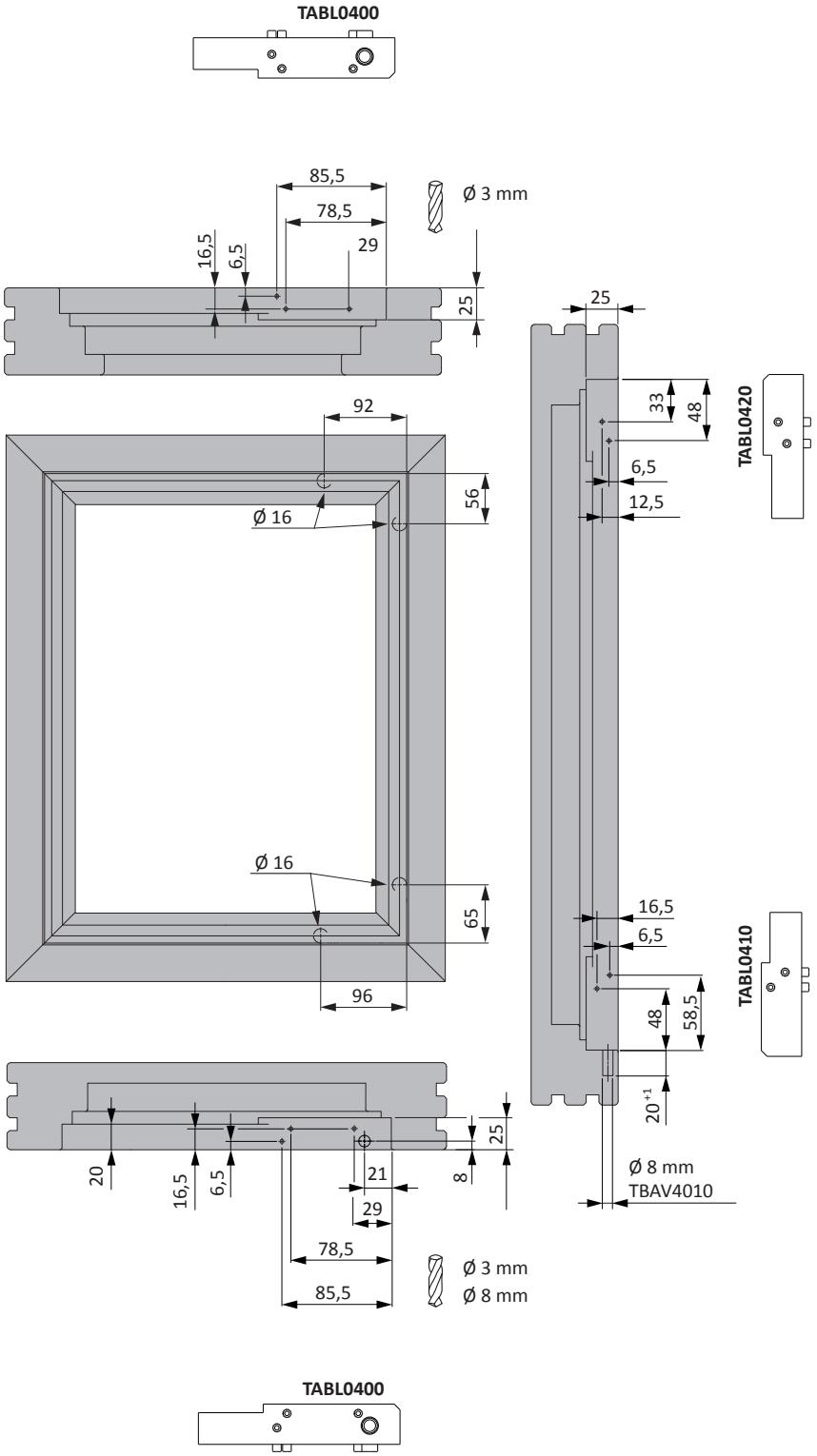
TABL0400
85,5
78,5
29
16,5
6,5
25
Ø 3 mm
92
56
Ø 16
Ø 16
65
96
25
33
48
6,5
12,5
TABL0420
16,5
6,5
48
58,5
TABL0410
20 +1
Ø 8 mm
TBAV4010
20
16,5
6,5
21
29
8
25
78,5
85,5
Ø 3 mm
Ø 8 mm
TABL0400

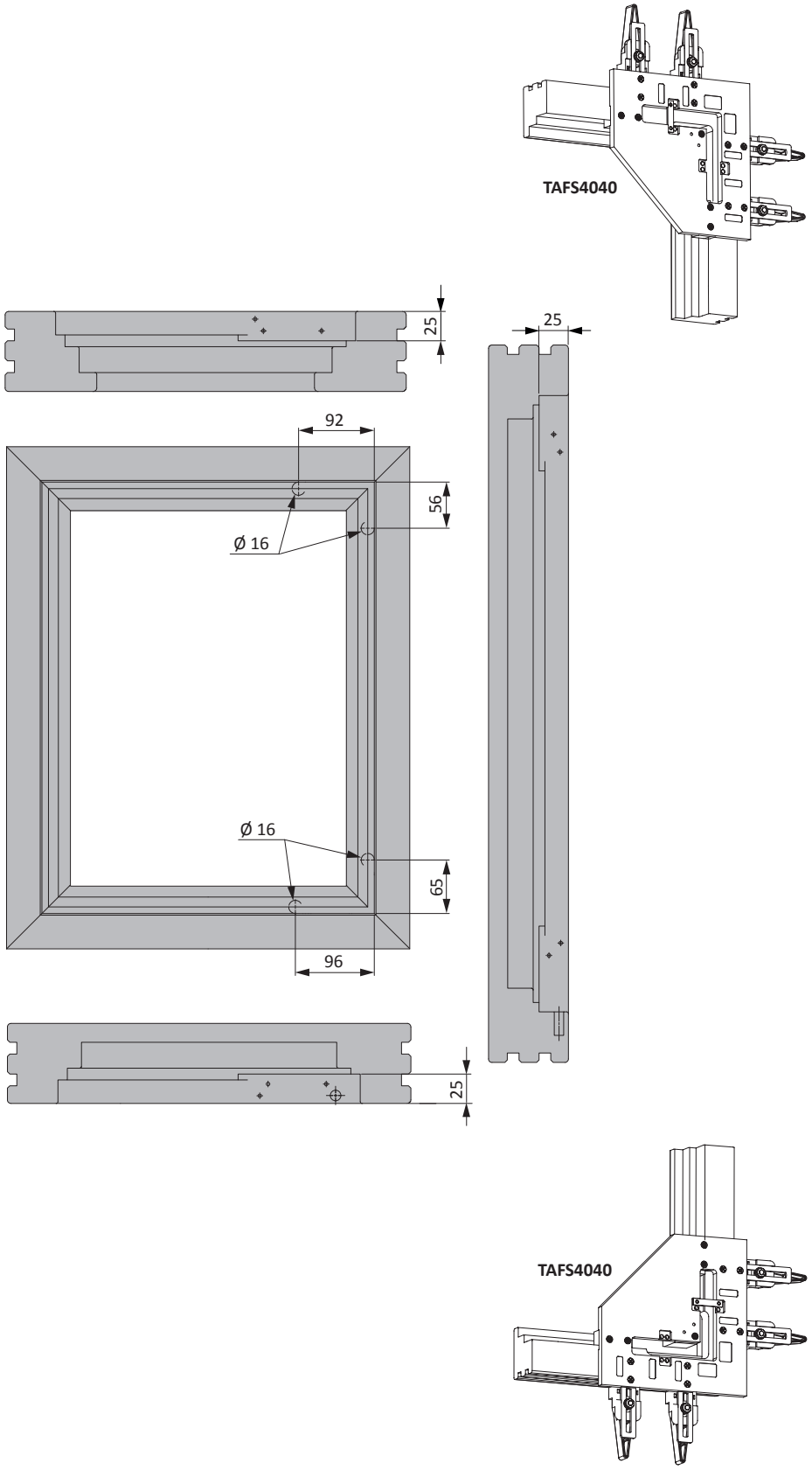
TAFS4040
25
25
92
56
Ø 16
Ø 16
65
96
25
TAFS4040

1.4

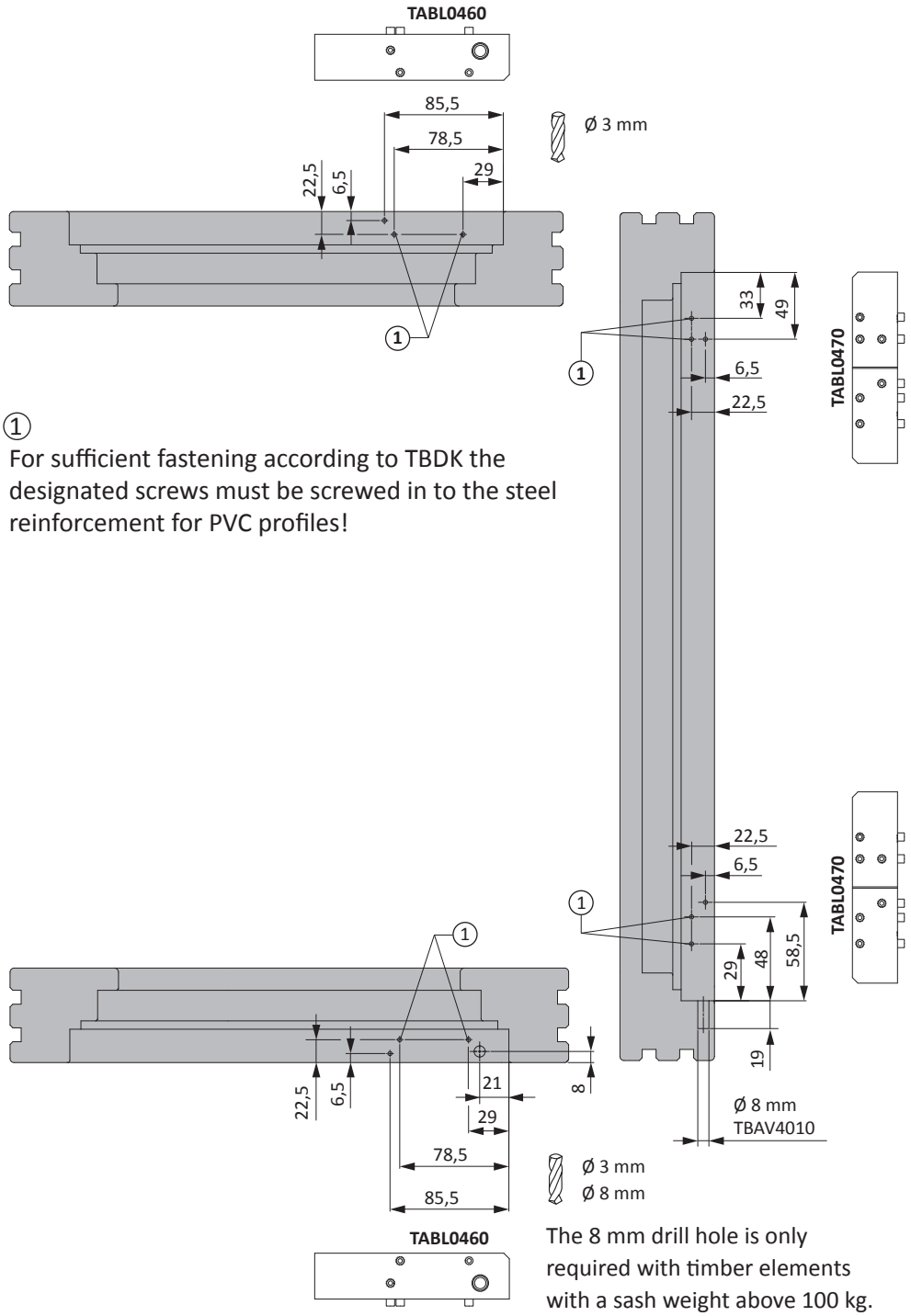


① For sufficient fastening according to TBDK the designated screws must be screwed in to the steel reinforcement for PVC profiles!

The 8 mm drill hole is only required with timber elements with a sash weight above 100 kg.

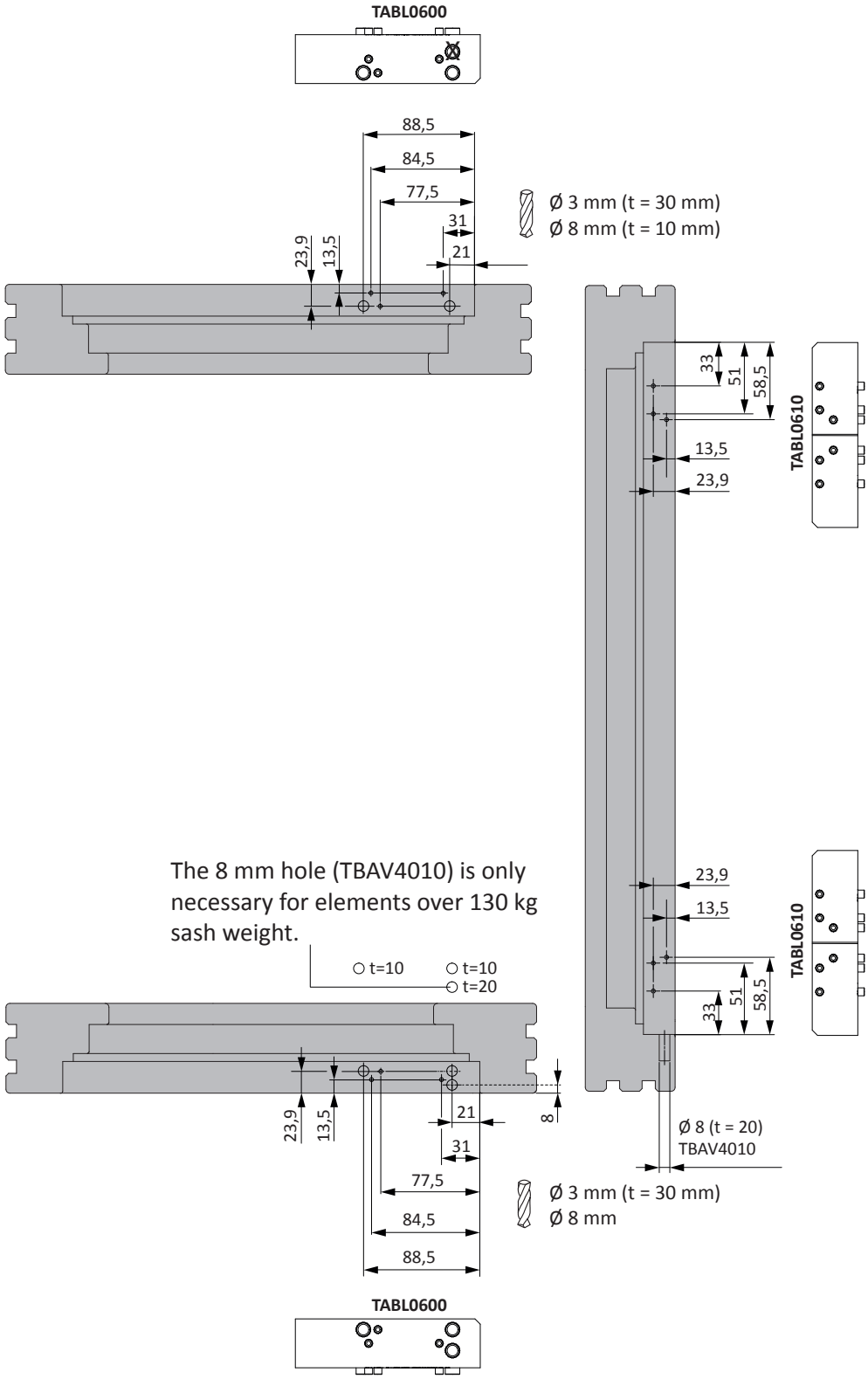
TABL0600
88,5
84,5
77,5
31
21
23,9
13,5
Ø 3 mm (t = 30 mm)
Ø 8 mm (t = 10 mm)
33
51
58,5
13,5
23,9
TABL0610
The 8 mm hole (TBAV4010) is only necessary for elements over 130 kg sash weight.
t=10
t=10
t=20
8
Ø 8 (t = 20)
TBAV4010
Ø 3 mm (t = 30 mm)
Ø 8 mm
TABL0600

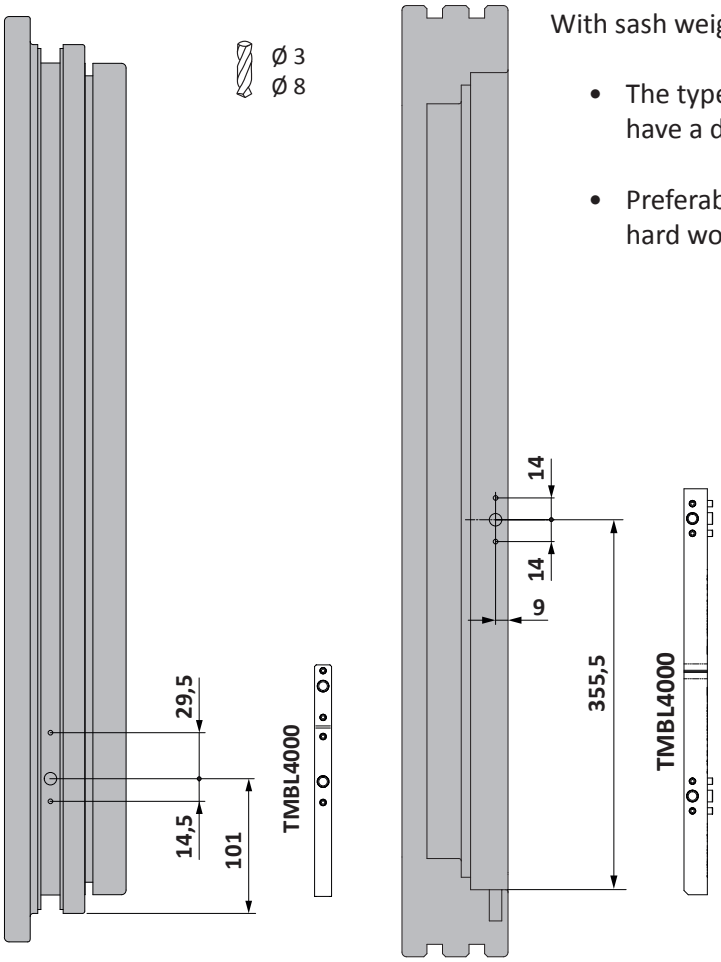


With sash weights > 150 kg:

- The type of wood used must have a density of 0,60 g/cm³
- Preferably use oak or a similarly hard wood

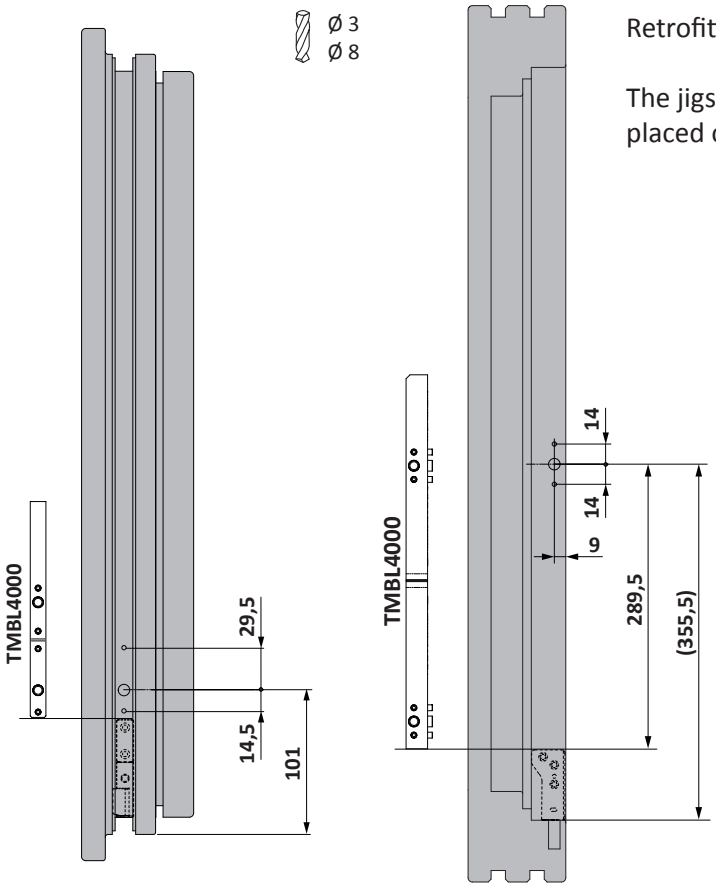


Retrofitting of existing elements:

The jigs are turned 180° and are placed on the bottom or corner hinge.

## Technical information

| Part number | Description | Groove axis | sash weight | |
|---|---|---|---|---|
| TBEB4011-... | corner hinge AX 9 rh. | 9 | 150 kg | 4 |
| TBEB4012-... | corner hinge AX 9 lh. | 9 | 150 kg | 4 |
| TBEB4001-... | corner hinge AX 13 rh. | 13 | 150 kg | 4 |
| TBEB4002-... | corner hinge AX 13 lh. | 13 | 150 kg | 4 |



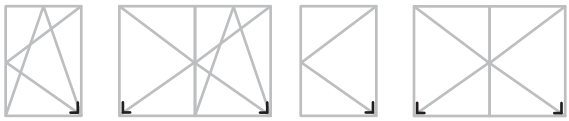

- **Please observe:**
  Guidelines/notes on the product and on liability (VHBH directive as well as the other applicable documents listed - directive can be downloaded at www.beschlagindustrie.de/ggsb/richtlinien.asp )
  Specifications from the profile manufacturers/system owners (PVC, light metal) or DIN 68 121 “Wooden profiles for windows and portal doors”

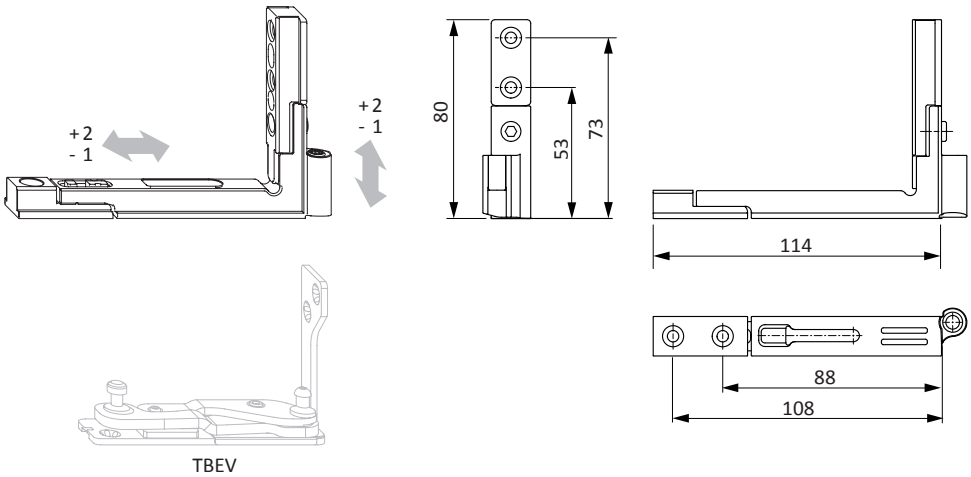


## Sales information

| Description | Part number | Surface | Colour | Box quantity |
|---|---|---|---|---|
| corner hinge AX 9 rh. | TBEB4011-10001_ | Titan Silver | without | 1 pc |
| | TBEB4011-10005_ | Titan Silver | without | 50 pcs |
| corner hinge AX 9 lh. | TBEB4012-10001_ | Titan Silver | without | 1 pc |
| | TBEB4012-10005_ | Titan Silver | without | 50 pcs |
| corner hinge AX 13 rh. | TBEB4001-10001_ | Titan Silver | without | 1 pc |
| | TBEB4001-10005_ | Titan Silver | without | 50 pcs |
| corner hinge AX 13 lh. | TBEB4002-10001_ | Titan Silver | without | 1 pc |
| | TBEB4002-10005_ | Titan Silver | without | 50 pcs |

## Technical information

| Part number | Description | Airgap | Groove axis | sash weight | |
|---|---|---|---|---|---|
| TBEV4011-... | bottom hinge AX 24/9 rh. | 12 | 9 | 100 kg | 5 |
| TBEV4012-... | bottom hinge AX 24/9 lh. | 12 | 9 | 100 kg | 5 |
| TBEV4001-... | bottom hinge AX 24/13 rh. | 12 | 13 | 100 kg | 5 |
| TBEV4002-... | bottom hinge AX 24/13 lh. | 12 | 13 | 100 kg | 5 |
| TKEL4021-... | cover cap EL AX 24 rh. | - | - | - | - |
| TKEL4022-... | cover cap EL AX 24 lh. | - | - | - | - |

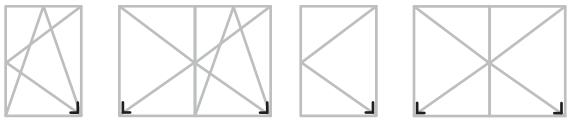

- A special screw with a shank diameter of 4.5 mm must be used to fix the component
- Fixing screws for the bottom hinge must be selected and fixed, so that the screw heads do not protrude beyond the respective base plate.
- The rebate width of the finished element must be min. 24 mm
- Airgap $12^{+0,5}$ mm
- * Including cover cap

- **Please observe:**
  Guidelines/notes on the product and on liability (VHBH directive as well as the other applicable documents listed - directive can be downloaded at www.beschlagindustrie.de/ggsb/richtlinien.asp )
  Specifications from the profile manufacturers/system owners (PVC, light metal) or DIN 68 121 “Wooden profiles for windows and portal doors”

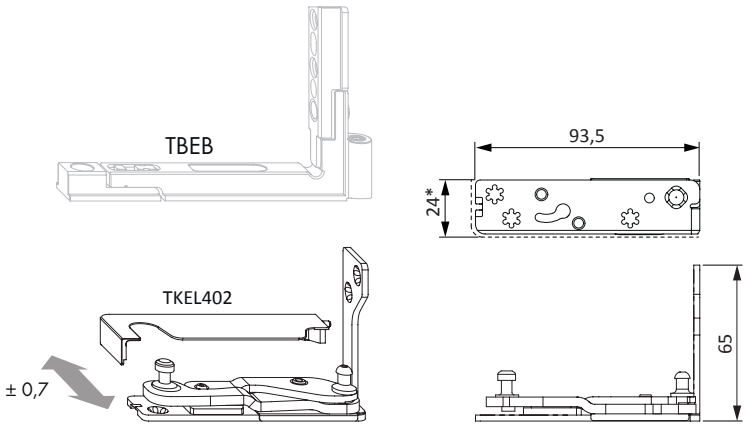


## Sales information

| Description | Part number | Surface | Colour | Box quantity |
|---|---|---|---|---|
| bottom hinge AX 24/9 rh. | TBEV4011-10001_ | Titan Silver | without | 1 pc |
| | TBEV4011-10004_ | Titan Silver | without | 25 pcs |
| bottom hinge AX 24/9 lh. | TBEV4012-10001_ | Titan Silver | without | 1 pc |
| | TBEV4012-10004_ | Titan Silver | without | 25 pcs |
| bottom hinge AX 24/13 rh. | TBEV4001-10001_ | Titan Silver | without | 1 pc |
| | TBEV4001-10004_ | Titan Silver | without | 25 pcs |
| bottom hinge AX 24/13 lh. | TBEV4002-10001_ | Titan Silver | without | 1 pc |
| | TBEV4002-10004_ | Titan Silver | without | 25 pcs |
| cover cap EL AX 24 rh. | TKEL4021-0E401_ | neutral | RAL7037 | 1 pc |
| | TKEL4021-0E405_ | neutral | RAL7037 | 50 pcs |
| cover cap EL AX 24 lh. | TKEL4022-0E401_ | neutral | RAL7037 | 1 pc |
| | TKEL4022-0E405_ | neutral | RAL7037 | 50 pcs |

## Technical information

| Part number | Description | Airgap | Groove axis | sash weight | |
|---|---|---|---|---|---|
| TBEV4061-... | bottom hinge H Ø8 AX 24/9 rh. | 12 | 9 | 150 kg | 5 |
| TBEV4062-... | bottom hinge H Ø8 AX 24/9 lh. | 12 | 9 | 150 kg | 5 |
| TBEV4051-... | bottom hinge H Ø8 AX 24/13 rh. | 12 | 13 | 150 kg | 5 |
| TBEV4052-... | bottom hinge H Ø8 AX 24/13 lh. | 12 | 13 | 150 kg | 5 |
| TBAV4010-... | supporting dowel AX | - | - | - | - |
| TKEL4021-... | cover cap EL AX 24 rh. | - | - | - | - |
| TKEL4022-... | cover cap EL AX 24 lh. | - | - | - | - |



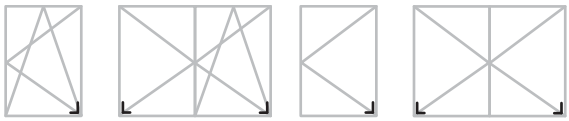

- A special screw with a shank diameter of 4.5 mm must be used to fix the component
- Fixing screws for the bottom hinge must be selected and fixed, so that the screw heads do not protrude beyond the respective base plate.
- The rebate width of the finished element must be min. 24 mm
- Airgap $12^{+0,5}$ mm
- * Including cover cap
- For more than 100 kg sash weight the support bolt TBAV4010 must be used
- **Please observe:**
  Guidelines/notes on the product and on liability (VHBH directive as well as the other applicable documents listed - directive can be downloaded at www.beschlagindustrie.de/ggsb/richtlinien.asp )
  Specifications from the profile manufacturers/system owners (PVC, light metal) or DIN 68 121 “Wooden profiles for windows and portal doors”

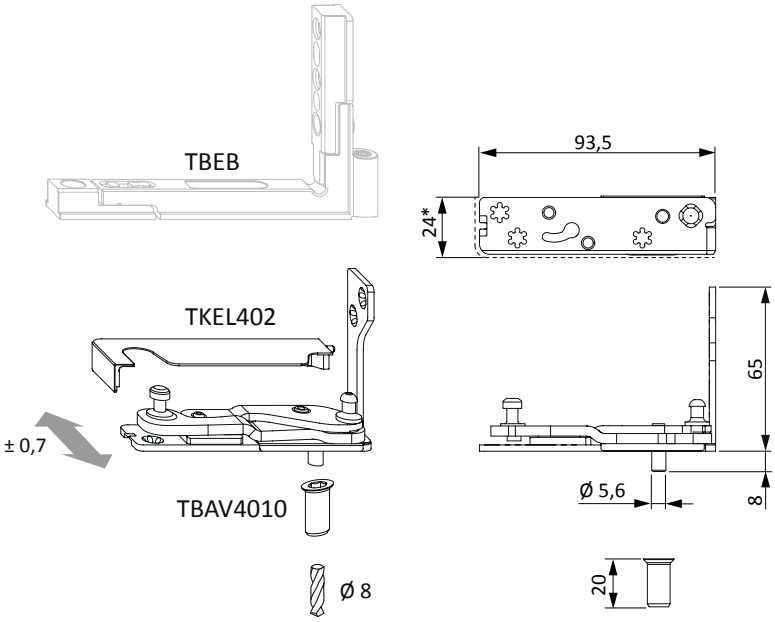

## Sales information

| Description | Part number | Surface | Colour | Box quantity |
|---|---|---|---|---|
| bottom hinge H Ø8 AX 24/9 rh. | TBEV4061-10001_ | Titan Silver | without | 1 pc |
| | TBEV4061-10004_ | Titan Silver | without | 25 pcs |
| bottom hinge H Ø8 AX 24/9 lh. | TBEV4062-10001_ | Titan Silver | without | 1 pc |
| | TBEV4062-10004_ | Titan Silver | without | 25 pcs |
| bottom hinge H Ø8 AX 24/13 rh. | TBEV4051-10001_ | Titan Silver | without | 1 pc |
| | TBEV4051-10004_ | Titan Silver | without | 25 pcs |
| bottom hinge H Ø8 AX 24/13 lh. | TBEV4052-10001_ | Titan Silver | without | 1 pc |
| | TBEV4052-10004_ | Titan Silver | without | 25 pcs |
| supporting dowel AX | TBAV4010-00001_ | neutral | without | 1 pc |
| | TBAV4010-00005_ | neutral | without | 50 pcs |
| cover cap EL AX 24 rh. | TKEL4021-0E401_ | neutral | RAL7037 | 1 pc |
| | TKEL4021-0E405_ | neutral | RAL7037 | 50 pcs |
| cover cap EL AX 24 lh. | TKEL4022-0E401_ | neutral | RAL7037 | 1 pc |
| | TKEL4022-0E405_ | neutral | RAL7037 | 50 pcs |

## Technical information

| Part number | Description | Airgap | Groove axis | sash weight | |
|---|---|---|---|---|---|
| TBEV4111-... | bottom hinge DF/3 AX 24/9 rh. | 12 | 9 | 80 kg | 4 |
| TBEV4112-... | bottom hinge DF/3 AX 24/9 lh. | 12 | 9 | 80 kg | 4 |
| TBEV4101-... | bottom hinge DF/3 AX 24/13 rh. | 12 | 13 | 80 kg | 4 |
| TBEV4102-... | bottom hinge DF/3 AX 24/13 lh. | 12 | 13 | 80 kg | 4 |



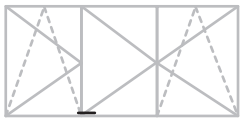

- A special screw with a shank diameter of 4.5 mm must be used to fix the component
- Fixing screws for the bottom hinge must be selected and fixed, so that the screw heads do not protrude beyond the respective base plate.
- The rebate width of the finished element must be min. 24 mm
- a = sash rebate edge slave sash
- Airgap $12^{+0,5}$ mm

- **Please observe:**
  Guidelines/notes on the product and on liability (VHBH directive as well as the other applicable documents listed - directive can be downloaded at www.beschlagindustrie.de/ggsb/richtlinien.asp )
  Specifications from the profile manufacturers/system owners (PVC, light metal) or DIN 68 121 “Wooden profiles for windows and portal doors”

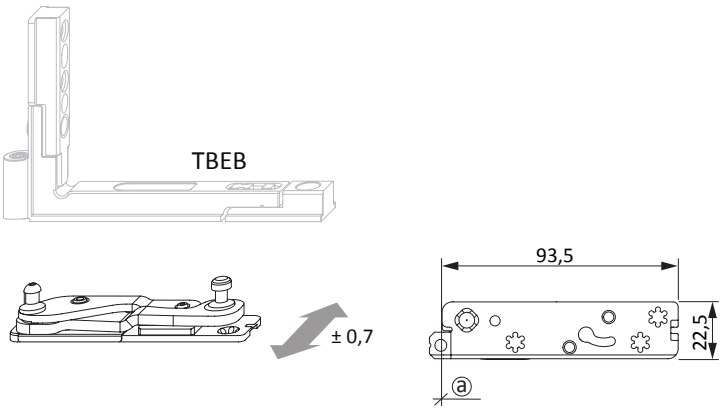


## Sales information

| Description | Part number | Surface | Colour | Box quantity |
|---|---|---|---|---|
| bottom hinge DF/3 AX 24/9 rh. | TBEV4111-10001_ | Titan Silver | without | 1 pc |
| | TBEV4111-10004_ | Titan Silver | without | 25 pcs |
| bottom hinge DF/3 AX 24/9 lh. | TBEV4112-10001_ | Titan Silver | without | 1 pc |
| | TBEV4112-10004_ | Titan Silver | without | 25 pcs |
| bottom hinge DF/3 AX 24/13 rh. | TBEV4101-10001_ | Titan Silver | without | 1 pc |
| | TBEV4101-10004_ | Titan Silver | without | 25 pcs |
| bottom hinge DF/3 AX 24/13 lh. | TBEV4102-10001_ | Titan Silver | without | 1 pc |
| | TBEV4102-10004_ | Titan Silver | without | 25 pcs |

## Technical information

| Part number | Description | Airgap | Groove axis | sash weight | |
|---|---|---|---|---|---|
| TBEV4021-... | bottom hinge AX 30/13 rh. | 12 | 13 | 100 kg | 6 |
| TBEV4022-... | bottom hinge AX 30/13 lh. | 12 | 13 | 100 kg | 6 |
| TKEL4031-... | cover cap EL AX 30 rh. | - | - | - | - |
| TKEL4032-... | cover cap EL AX 30 lh. | - | - | - | - |



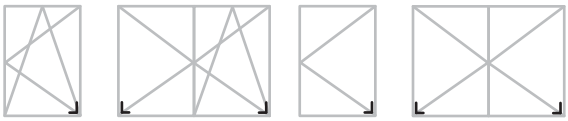

- A special screw with a shank diameter of 4.5 mm must be used to fix the component
- Fixing screws for the bottom hinge must be selected and fixed, so that the screw heads do not protrude beyond the respective base plate.
- Crt. accessory AX profile related, see PDB TMZV41 - only required for PVC elements
- Airgap $12^{+0,5}$ mm
- * Including cover cap
- With the corresponding application diagram in mind a sash weight of up to max. 150 kg is possible with PVC elements
- **Please observe:**
  Guidelines/notes on the product and on liability (VHBH directive as well as the other applicable documents listed - directive can be downloaded at www.beschlagindustrie.de/ggsb/richtlinien.asp )
  Specifications from the profile manufacturers/system owners (PVC, light metal) or DIN 68 121 “Wooden profiles for windows and portal doors”

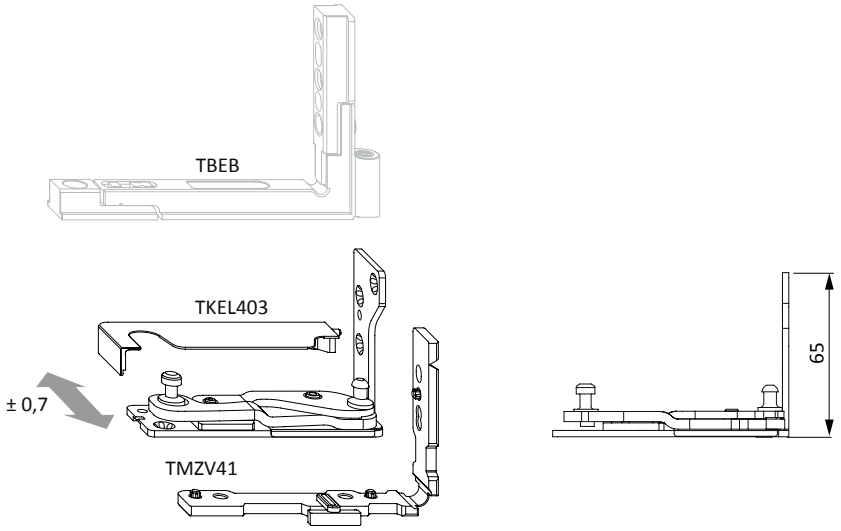


## Sales information

| Description | Part number | Surface | Colour | Box quantity |
|---|---|---|---|---|
| bottom hinge AX 30/13 rh. | TBEV4021-10001_ | Titan Silver | without | 1 pc |
| | TBEV4021-10004_ | Titan Silver | without | 25 pcs |
| bottom hinge AX 30/13 lh. | TBEV4022-10001_ | Titan Silver | without | 1 pc |
| | TBEV4022-10004_ | Titan Silver | without | 25 pcs |
| cover cap EL AX 30 rh. | TKEL4031-0E401_ | neutral | RAL7037 | 1 pc |
| | TKEL4031-0E405_ | neutral | RAL7037 | 50 pcs |
| cover cap EL AX 30 lh. | TKEL4032-0E401_ | neutral | RAL7037 | 1 pc |
| | TKEL4032-0E405_ | neutral | RAL7037 | 50 pcs |

## Technical information

| Part number | Description | Airgap | Groove axis | sash weight | |
|---|---|---|---|---|---|
| TBEV4071-... | bottom hinge H Ø8 AX 30/13 rh. | 12 | 13 | 150 kg | 6 |
| TBEV4072-... | bottom hinge H Ø8 AX 30/13 lh. | 12 | 13 | 150 kg | 6 |
| TBAV4010-... | supporting dowel AX | - | - | - | - |
| TKEL4031-... | cover cap EL AX 30 rh. | - | - | - | - |
| TKEL4032-... | cover cap EL AX 30 lh. | - | - | - | - |



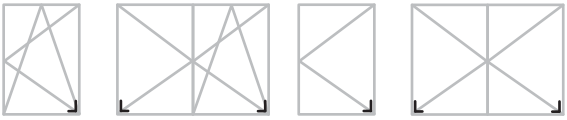

- A special screw with a shank diameter of 4.5 mm must be used to fix the component
- Fixing screws for the bottom hinge must be selected and fixed, so that the screw heads do not protrude beyond the respective base plate.
- Airgap $12^{+0,5}$ mm
- For more than 100 kg sash weight the support bolt TBAV4010 must be used
- * Including cover cap

- **Please observe:**
  Guidelines/notes on the product and on liability (VHBH directive as well as the other applicable documents listed - directive can be downloaded at www.beschlagindustrie.de/ggsb/richtlinien.asp )
  Specifications from the profile manufacturers/system owners (PVC, light metal) or DIN 68 121 “Wooden profiles for windows and portal doors”

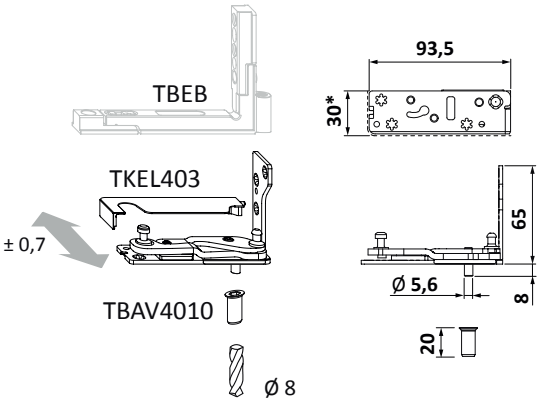


## Sales information

| Description | Part number | Surface | Colour | Box quantity |
|---|---|---|---|---|
| bottom hinge H Ø8 AX 30/13 rh. | TBEV4071-10001_ | Titan Silver | without | 1 pc |
| | TBEV4071-10004_ | Titan Silver | without | 25 pcs |
| bottom hinge H Ø8 AX 30/13 lh. | TBEV4072-10001_ | Titan Silver | without | 1 pc |
| | TBEV4072-10004_ | Titan Silver | without | 25 pcs |
| supporting dowel AX | TBAV4010-00001_ | neutral | without | 1 pc |
| | TBAV4010-00005_ | neutral | without | 50 pcs |
| cover cap EL AX 30 rh. | TKEL4031-0E401_ | neutral | RAL7037 | 1 pc |
| | TKEL4031-0E405_ | neutral | RAL7037 | 50 pcs |
| cover cap EL AX 30 lh. | TKEL4032-0E401_ | neutral | RAL7037 | 1 pc |
| | TKEL4032-0E405_ | neutral | RAL7037 | 50 pcs |

## Technical information

| Part number | Description | Airgap | Groove axis | sash weight | |
|---|---|---|---|---|---|
| TBEV4121-... | bottom hinge DF/3 AX 30/13 rh. | 12 | 13 | 80 kg | 4 |
| TBEV4122-... | bottom hinge DF/3 AX 30/13 lh. | 12 | 13 | 80 kg | 4 |



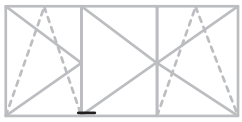

- A special screw with a shank diameter of 4.5 mm must be used to fix the component
- Fixing screws for the bottom hinge must be selected and fixed, so that the screw heads do not protrude beyond the respective base plate.
- Crt. accessory AX profile related, see PDB TMZV41 - only required for PVC elements
- Trim packer TMZV41 as illustrated
- a = sash rebate edge slave sash
- Airgap $12^{+0,5}$ mm

- **Please observe:**
  Guidelines/notes on the product and on liability (VHBH directive as well as the other applicable documents listed - directive can be downloaded at www.beschlagindustrie.de/ggsb/richtlinien.asp )
  Specifications from the profile manufacturers/system owners (PVC, light metal) or DIN 68 121 “Wooden profiles for windows and portal doors”

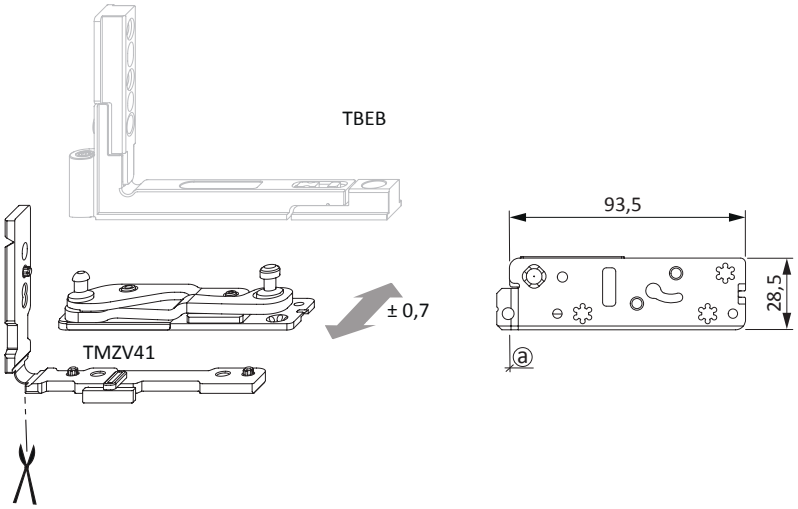


## Sales information

| Description | Part number | Surface | Colour | Box quantity |
|---|---|---|---|---|
| bottom hinge DF/3 AX 30/13 rh. | TBEV4121-10001_ | Titan Silver | without | 1 pc |
| | TBEV4121-10004_ | Titan Silver | without | 25 pcs |
| bottom hinge DF/3 AX 30/13 lh. | TBEV4122-10001_ | Titan Silver | without | 1 pc |
| | TBEV4122-10004_ | Titan Silver | without | 25 pcs |

## Technical information

| Part number | Description | Airgap | Groove axis | sash weight | |
|---|---|---|---|---|---|
| TBEV4091-... | bottom hinge H Ø8 AX 34/13 rh. | 12 | 13 | 150 kg | 6 |
| TBEV4092-... | bottom hinge H Ø8 AX 34/13 lh. | 12 | 13 | 150 kg | 6 |
| TBAV4010-... | supporting dowel AX | - | - | - | - |
| TKEL4041-... | cover cap EL AX 34 rh. | - | - | - | - |
| TKEL4042-... | cover cap EL AX 34 lh. | - | - | - | - |



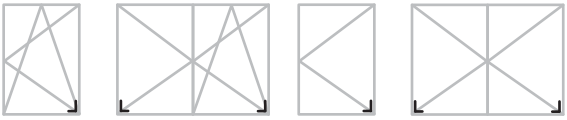

- Fixing screws for the bottom hinge must be selected and fixed, so that the screw heads do not protrude beyond the respective base plate.
- The rebate width of the finished element must be min. 34 mm
- For more than 130 kg sash weight the support bolt TBAV4010 must be used
- Airgap $12^{+0,5}$ mm
- * Including cover cap

- **Please observe:**
  Guidelines/notes on the product and on liability (VHBH directive as well as the other applicable documents listed - directive can be downloaded at www.beschlagindustrie.de/ggsb/richtlinien.asp )
  Specifications from the profile manufacturers/system owners (PVC, light metal) or DIN 68 121 “Wooden profiles for windows and portal doors”

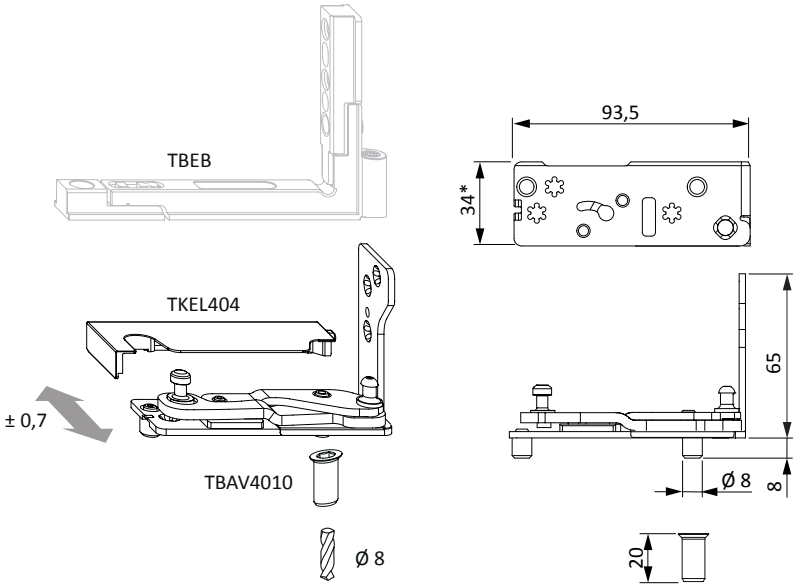

## Sales information

| Description | Part number | Surface | Colour | Box quantity |
|---|---|---|---|---|
| bottom hinge H Ø8 AX 34/13 rh. | TBEV4091-10001_ | Titan Silver | without | 1 pc |
| | TBEV4091-10004_ | Titan Silver | without | 25 pcs |
| bottom hinge H Ø8 AX 34/13 lh. | TBEV4092-10001_ | Titan Silver | without | 1 pc |
| | TBEV4092-10004_ | Titan Silver | without | 25 pcs |
| supporting dowel AX | TBAV4010-00001_ | neutral | without | 1 pc |
| | TBAV4010-00005_ | neutral | without | 50 pcs |
| cover cap EL AX 34 rh. | TKEL4041-0E401_ | neutral | RAL7037 | 1 pc |
| | TKEL4041-0E405_ | neutral | RAL7037 | 50 pcs |
| cover cap EL AX 34 lh. | TKEL4042-0E401_ | neutral | RAL7037 | 1 pc |
| | TKEL4042-0E405_ | neutral | RAL7037 | 50 pcs |

## Technical information

| Part number | Description | Airgap | Groove axis | sash weight | |
|---|---|---|---|---|---|
| TBEV4201-... | bottom hinge AX C10/9 rh. | 12 | 9 | 150 kg | 0 |
| TBEV4202-... | bottom hinge AX C10/9 lh. | 12 | 9 | 150 kg | 0 |
| TBEV4241-... | bottom hinge AX C10/13 rh. | 12 | 13 | 150 kg | 0 |
| TBEV4242-... | bottom hinge AX C10/13 lh. | 12 | 13 | 150 kg | 0 |
| TBEV4211-... | bottom hinge AX C12/9 rh. | 12 | 9 | 150 kg | 0 |
| TBEV4212-... | bottom hinge AX C12/9 lh. | 12 | 9 | 150 kg | 0 |
| TBEV4231-... | bottom hinge AX C14/9 rh. | 12 | 9 | 150 kg | 0 |
| TBEV4232-... | bottom hinge AX C14/9 lh. | 12 | 9 | 150 kg | 0 |
| TBEV4221-... | bottom hinge AX C14/13 rh. | 12 | 13 | 150 kg | 0 |
| TBEV4222-... | bottom hinge AX C14/13 lh. | 12 | 13 | 150 kg | 0 |
| TKEL4021-... | cover cap EL AX 24 rh. | - | - | - | - |
| TKEL4022-... | cover cap EL AX 24 lh. | - | - | - | - |

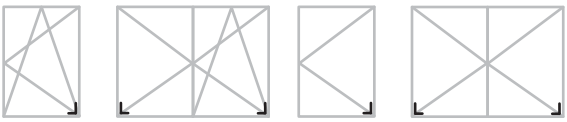

- clampable
- for aluminium systems with 16 mm eurogroove (BAN)
- crt. profile-related accessories AX C required, see PDB TMZV41
- Airgap $12^{+0,5}$ mm
- * Including cover cap

- **Please observe:**
  Guidelines/notes on the product and on liability (VHBH directive as well as the other applicable documents listed - directive can be downloaded at www.beschlagindustrie.de/ggsb/richtlinien.asp )
  Specifications from the profile manufacturers/system owners (PVC, light metal) or DIN 68 121 “Wooden profiles for windows and portal doors”

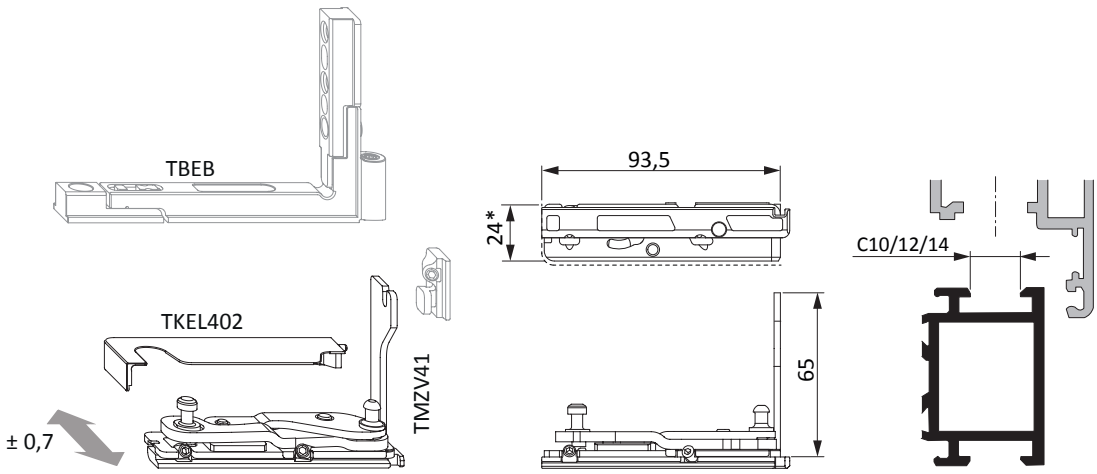

## Sales information

| Description | Part number | Surface | Colour | Box quantity |
|---|---|---|---|---|
| bottom hinge AX C10/9 rh. | TBEV4201-10001_ | Titan Silver | without | 1 pc |
| | TBEV4201-10004_ | Titan Silver | without | 25 pcs |
| bottom hinge AX C10/9 lh. | TBEV4202-10001_ | Titan Silver | without | 1 pc |
| | TBEV4202-10004_ | Titan Silver | without | 25 pcs |
| bottom hinge AX C10/13 rh. | TBEV4241-10001_ | Titan Silver | without | 1 pc |
| | TBEV4241-10004_ | Titan Silver | without | 25 pcs |
| bottom hinge AX C10/13 lh. | TBEV4242-10001_ | Titan Silver | without | 1 pc |
| | TBEV4242-10004_ | Titan Silver | without | 25 pcs |
| bottom hinge AX C12/9 rh. | TBEV4211-10001_ | Titan Silver | without | 1 pc |
| | TBEV4211-10004_ | Titan Silver | without | 25 pcs |
| bottom hinge AX C12/9 lh. | TBEV4212-10001_ | Titan Silver | without | 1 pc |
| | TBEV4212-10004_ | Titan Silver | without | 25 pcs |
| bottom hinge AX C14/9 rh. | TBEV4231-10001_ | Titan Silver | without | 1 pc |
| | TBEV4231-10004_ | Titan Silver | without | 25 pcs |
| bottom hinge AX C14/9 lh. | TBEV4232-10001_ | Titan Silver | without | 1 pc |
| | TBEV4232-10004_ | Titan Silver | without | 25 pcs |
| bottom hinge AX C14/13 rh. | TBEV4221-10001_ | Titan Silver | without | 1 pc |
| | TBEV4221-10004_ | Titan Silver | without | 25 pcs |
| bottom hinge AX C14/13 lh. | TBEV4222-10001_ | Titan Silver | without | 1 pc |
| | TBEV4222-10004_ | Titan Silver | without | 25 pcs |
| cover cap EL AX 24 rh. | TKEL4021-0E401_ | neutral | RAL7037 | 1 pc |
| | TKEL4021-0E405_ | neutral | RAL7037 | 50 pcs |
| cover cap EL AX 24 lh. | TKEL4022-0E401_ | neutral | RAL7037 | 1 pc |
| | TKEL4022-0E405_ | neutral | RAL7037 | 50 pcs |

## Technical information

| Part number | Description | FFB | Dimensions (mm) | | | Airgap | sash weight | | |
|---|---|---|---|---|---|---|---|---|---|
| | | | A | B | C | | | | |
| TSSV4000-... | stay sash part AF AX sz 1 | 360 - 680 | 550 | - | 215 | 12 | 130 kg | 0 | 3 |
| TSSV0310-... | stay sash part AF AX 2+3 1RS | 651 - 850 | 710 | 433 | 202 | 12 | 150 kg | 1 | 4 |
| TSSV0320-... | stay sash part AF AX sz 4 1RS | 851 - 1050 | 910 | 552 | 202 | 12 | 150 kg | 1 | 7 |
| TSSV0330-... | stay sash part AF AX sz 5 1RS | 1051 - 1250 | 1110 | 752 | 202 | 12 | 150 kg | 1 | 8 |



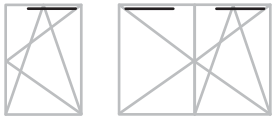

- for FFB 1251-1450 mm use stay sash part AX sz 4 with additional stay, linkage additional stay and tilt restrictor additional stay
  for FFB 1451-1650 mm use stay sash part AX sz 5 with additional stay, linkage additional stay and tilt restrictor additional stay
- Integrated anti-slam device in the tilt position
- Mishandling-device in tilt-position
- Shootbolt protrusion for increased compression
- For FFB < 380 mm the stay sash part must be manually cropped.
- **Please observe:**
  Guidelines/notes on the product and on liability (VHBH directive as well as the other applicable documents listed - directive can be downloaded at www.beschlagindustrie.de/ggsb/richtlinien.asp )
  Specifications from the profile manufacturers/system owners (PVC, light metal) or DIN 68 121 “Wooden profiles for windows and portal doors”

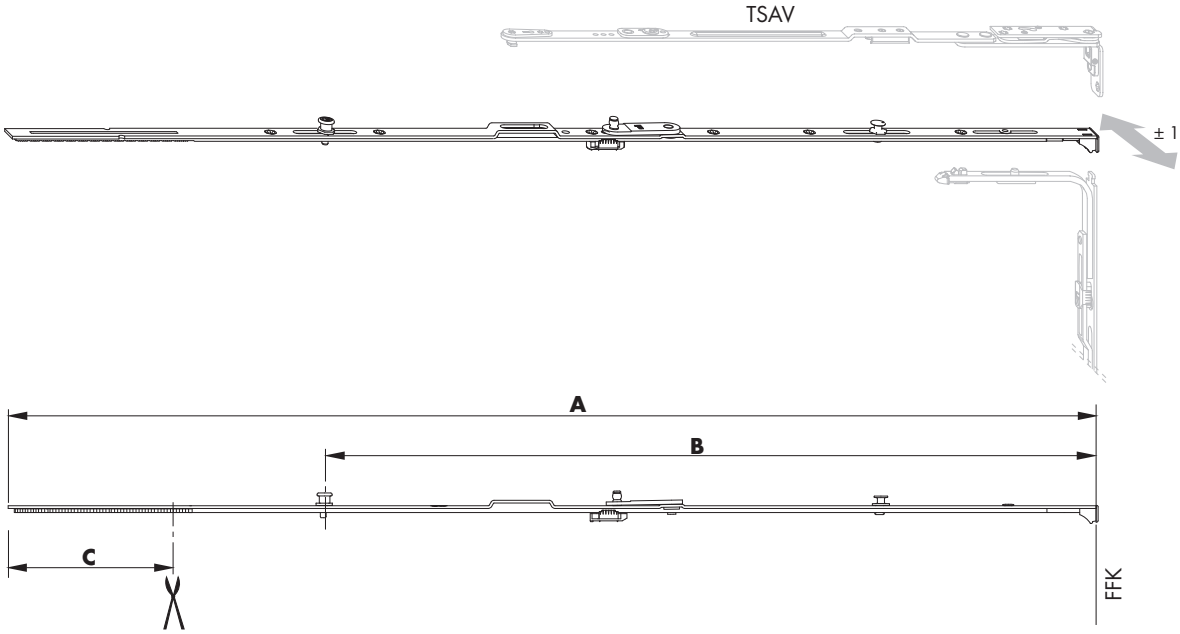

## Sales information

| Description | Part number | Surface | Colour | Box quantity |
|---|---|---|---|---|
| stay sash part AF AX sz 1 | TSSV4000-10001_ | Titan Silver | without | 1 pc |
| | TSSV4000-10004_ | Titan Silver | without | 25 pcs |
| stay sash part AF AX 2+3 1RS | TSSV0310-10001_ | Titan Silver | without | 1 pc |
| | TSSV0310-10004_ | Titan Silver | without | 25 pcs |
| stay sash part AF AX sz 4 1RS | TSSV0320-10001_ | Titan Silver | without | 1 pc |
| | TSSV0320-10004_ | Titan Silver | without | 25 pcs |
| stay sash part AF AX sz 5 1RS | TSSV0330-10001_ | Titan Silver | without | 1 pc |
| | TSSV0330-10004_ | Titan Silver | without | 25 pcs |

## Technical information

| Part number | Description | Dimensions (mm) A | Airgap | sash weight | | |
|---|---|---|---|---|---|---|
| TSSV3020-... | stay sash part DF AX | 225 | 12 | 100 kg | 0 | 4 |



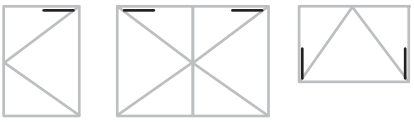

- The range of application conforms to the connecting components
- **Please observe:**
  Guidelines/notes on the product and on liability (VHBH directive as well as the other applicable documents listed - directive can be downloaded at www.beschlagindustrie.de/ggsb/richtlinien.asp )
  Specifications from the profile manufacturers/system owners (PVC, light metal) or DIN 68 121 “Wooden profiles for windows and portal doors”

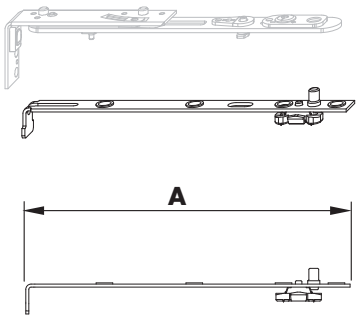


## Sales information

| Description | Part number | Surface | Colour | Box quantity |
|---|---|---|---|---|
| stay sash part DF AX | TSSV3020-10001_ | Titan Silver | without | 1 pc |
| | TSSV3020-10004_ | Titan Silver | without | 25 pcs |

## Technical information

| Part number | Description | Dimensions (mm) | | Airgap | sash weight | | |
|---|---|---|---|---|---|---|---|
| | | A | B | | | | |
| TSSV4010-... | stay sash part AF AX UE sz 1 | 550 | 170 | 12 | 130 kg | 1 | 3 |



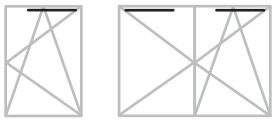

- With magnetic roller for electronic locking and opening monitoring AEROCONTROL (not suitable as a locking point)
- Integrated anti-slam device in the tilt position
- Mishandling-device in tilt-position
- Shootbolt protrusion for increased compression

- **Please observe:**
  Guidelines/notes on the product and on liability (VHBH directive as well as the other applicable documents listed - directive can be downloaded at www.beschlagindustrie.de/ggsb/richtlinien.asp )
  Specifications from the profile manufacturers/system owners (PVC, light metal) or DIN 68 121 “Wooden profiles for windows and portal doors”

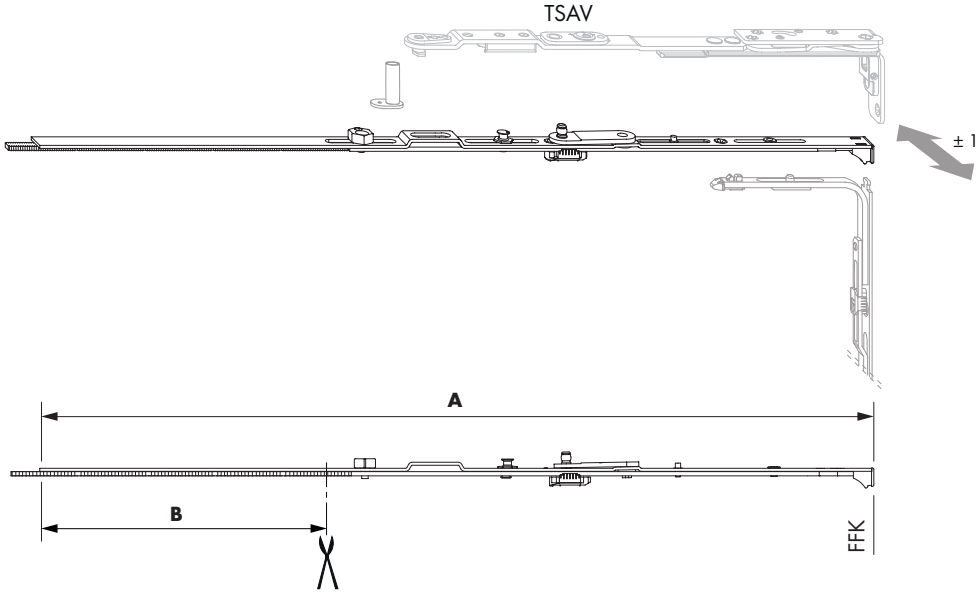


## Sales information

| Description | Part number | Surface | Colour | Box quantity |
|---|---|---|---|---|
| stay sash part AF AX UE sz 1 | TSSV4010-10001_ | Titan Silver | without | 1 pc |
| | TSSV4010-10004_ | Titan Silver | without | 25 pcs |

## Technical information

| Part number | Description | FFB | Dimensions (mm) A | Dimensions (mm) B | Groove axis | sash weight | |
|---|---|---|---|---|---|---|---|
| TSAV4111-... | stay arm sz 1 AX 24/9 rh. | 360 - 680 | 313 | 80 | 9 | 130 kg | 5 |
| TSAV4112-... | stay arm sz 1 AX 24/9 lh. | 360 - 680 | 313 | 80 | 9 | 130 kg | 5 |
| TSAV4011-... | stay arm sz 1 AX 24/13 rh. | 360 - 680 | 313 | 80 | 13 | 130 kg | 5 |
| TSAV4012-... | stay arm sz 1 AX 24/13 lh. | 360 - 680 | 313 | 80 | 13 | 130 kg | 5 |
| TSAV4121-... | stay arm sz 2+3 AX 24/9 rh. | 681 - 850 | 368 | 140 | 9 | 150 kg | 5 |
| TSAV4122-... | stay arm sz 2+3 AX 24/9 lh. | 681 - 850 | 368 | 140 | 9 | 150 kg | 5 |
| TSAV4021-... | stay arm sz 2+3 AX 24/13 rh. | 681 - 850 | 368 | 140 | 13 | 150 kg | 5 |
| TSAV4022-... | stay arm sz 2+3 AX 24/13 lh. | 681 - 850 | 368 | 140 | 13 | 150 kg | 5 |
| TSAV4131-... | stay arm sz 4 AX 24/9 rh. | 851 - 1050 | 398 | 140 | 9 | 150 kg | 5 |
| TSAV4132-... | stay arm sz 4 AX 24/9 lh. | 851 - 1050 | 398 | 140 | 9 | 150 kg | 5 |
| TSAV4031-... | stay arm sz 4 AX 24/13 rh. | 851 - 1050 | 398 | 140 | 13 | 150 kg | 5 |
| TSAV4032-... | stay arm sz 4 AX 24/13 lh. | 851 - 1050 | 398 | 140 | 13 | 150 kg | 5 |
| TSAV4141-... | stay arm sz 5 AX 24/9 rh. | 1051 - 1250 | 531 | 140 | 9 | 150 kg | 5 |
| TSAV4142-... | stay arm sz 5 AX 24/9 lh. | 1051 - 1250 | 531 | 140 | 9 | 150 kg | 5 |
| TSAV4041-... | stay arm sz 5 AX 24/13 rh. | 1051 - 1250 | 531 | 140 | 13 | 150 kg | 5 |
| TSAV4042-... | stay arm sz 5 AX 24/13 lh. | 1051 - 1250 | 531 | 140 | 13 | 150 kg | 5 |

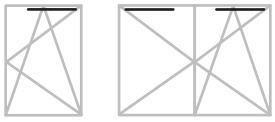

- Dimension B = opening width
- A special screw with a shank diameter of 4.5 mm must be used to fix the component
- Fixing screws for the stay arm must be selected and fixed, so that the screw heads do not protrude beyond the respective base plate.

- **Please observe:**
  Guidelines/notes on the product and on liability (VHBH directive as well as the other applicable documents listed - directive can be downloaded at www.beschlagindustrie.de/ggsb/richtlinien.asp )
  Specifications from the profile manufacturers/system owners (PVC, light metal) or DIN 68 121 “Wooden profiles for windows and portal doors”

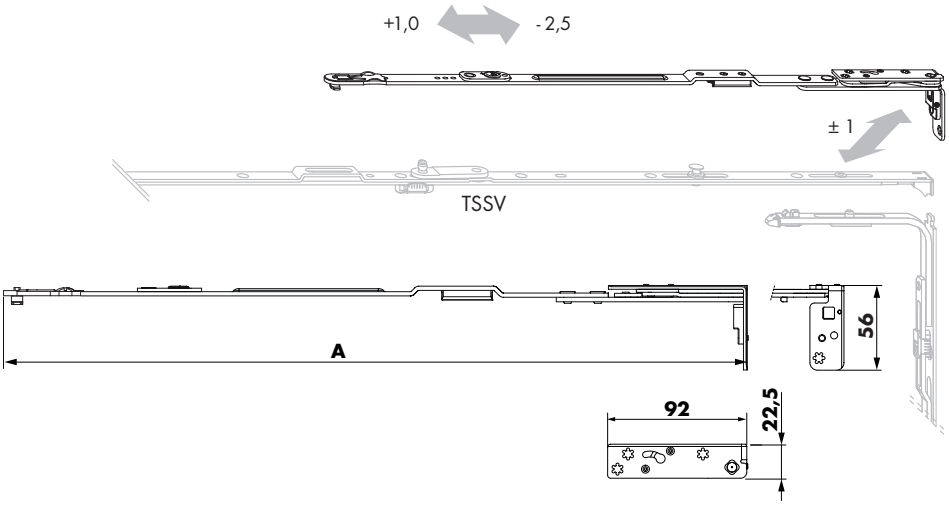

## Sales information

| Description | Part number | Surface | Colour | Box quantity |
|---|---|---|---|---|
| stay arm sz 1 AX 24/9 rh. | TSAV4111-10001_ | Titan Silver | without | 1 pc |
| | TSAV4111-10004_ | Titan Silver | without | 25 pcs |
| stay arm sz 1 AX 24/9 lh. | TSAV4112-10001_ | Titan Silver | without | 1 pc |
| | TSAV4112-10004_ | Titan Silver | without | 25 pcs |
| stay arm sz 1 AX 24/13 rh. | TSAV4011-10001_ | Titan Silver | without | 1 pc |
| | TSAV4011-10004_ | Titan Silver | without | 25 pcs |
| stay arm sz 1 AX 24/13 lh. | TSAV4012-10001_ | Titan Silver | without | 1 pc |
| | TSAV4012-10004_ | Titan Silver | without | 25 pcs |
| stay arm sz 2+3 AX 24/9 rh. | TSAV4121-10001_ | Titan Silver | without | 1 pc |
| | TSAV4121-10004_ | Titan Silver | without | 25 pcs |
| stay arm sz 2+3 AX 24/9 lh. | TSAV4122-10001_ | Titan Silver | without | 1 pc |
| | TSAV4122-10004_ | Titan Silver | without | 25 pcs |
| stay arm sz 2+3 AX 24/13 rh. | TSAV4021-10001_ | Titan Silver | without | 1 pc |
| | TSAV4021-10004_ | Titan Silver | without | 25 pcs |
| stay arm sz 2+3 AX 24/13 lh. | TSAV4022-10001_ | Titan Silver | without | 1 pc |
| | TSAV4022-10004_ | Titan Silver | without | 25 pcs |
| stay arm sz 4 AX 24/9 rh. | TSAV4131-10001_ | Titan Silver | without | 1 pc |
| | TSAV4131-10004_ | Titan Silver | without | 25 pcs |
| stay arm sz 4 AX 24/9 lh. | TSAV4132-10001_ | Titan Silver | without | 1 pc |
| | TSAV4132-10004_ | Titan Silver | without | 25 pcs |
| stay arm sz 4 AX 24/13 rh. | TSAV4031-10001_ | Titan Silver | without | 1 pc |
| | TSAV4031-10004_ | Titan Silver | without | 25 pcs |
| stay arm sz 4 AX 24/13 lh. | TSAV4032-10001_ | Titan Silver | without | 1 pc |
| | TSAV4032-10004_ | Titan Silver | without | 25 pcs |
| stay arm sz 5 AX 24/9 rh. | TSAV4141-10001_ | Titan Silver | without | 1 pc |
| | TSAV4141-10004_ | Titan Silver | without | 25 pcs |
| stay arm sz 5 AX 24/9 lh. | TSAV4142-10001_ | Titan Silver | without | 1 pc |
| | TSAV4142-10004_ | Titan Silver | without | 25 pcs |
| stay arm sz 5 AX 24/13 rh. | TSAV4041-10001_ | Titan Silver | without | 1 pc |
| | TSAV4041-10004_ | Titan Silver | without | 25 pcs |
| stay arm sz 5 AX 24/13 lh. | TSAV4042-10001_ | Titan Silver | without | 1 pc |
| | TSAV4042-10004_ | Titan Silver | without | 25 pcs |

## Technical information

| Part number | Description | FFB | Dimensions (mm) A | Dimensions (mm) B | Groove axis | sash weight | |
|---|---|---|---|---|---|---|---|
| TSAV4211-... | stay arm sz 1 AX 30/13 rh. | 360 - 680 | 313 | 80 | 13 | 130 kg | 6 |
| TSAV4212-... | stay arm sz 1 AX 30/13 lh. | 360 - 680 | 313 | 80 | 13 | 130 kg | 6 |
| TSAV4221-... | stay arm sz 2+3 AX 30/13 rh. | 681 - 850 | 368 | 140 | 13 | 150 kg | 6 |
| TSAV4222-... | stay arm sz 2+3 AX 30/13 lh. | 681 - 850 | 368 | 140 | 13 | 150 kg | 6 |
| TSAV4231-... | stay arm sz 4 AX 30/13 rh. | 851 - 1050 | 398 | 140 | 13 | 150 kg | 6 |
| TSAV4232-... | stay arm sz 4 AX 30/13 lh. | 851 - 1050 | 398 | 140 | 13 | 150 kg | 6 |
| TSAV4241-... | stay arm sz 5 AX 30/13 rh. | 1051 - 1250 | 531 | 140 | 13 | 150 kg | 6 |
| TSAV4242-... | stay arm sz 5 AX 30/13 lh. | 1051 - 1250 | 531 | 140 | 13 | 150 kg | 6 |



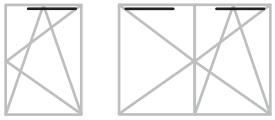

- Dimension B = opening width
- A special screw with a shank diameter of 4.5 mm must be used to fix the component
- Fixing screws for the stay arm must be selected and fixed, so that the screw heads do not protrude beyond the respective base plate.
- Crt. accessory AX profile related, see PDB TMZV41 - only required for PVC elements
- **Please observe:**
  Guidelines/notes on the product and on liability (VHBH directive as well as the other applicable documents listed - directive can be downloaded at www.beschlagindustrie.de/ggsb/richtlinien.asp )
  Specifications from the profile manufacturers/system owners (PVC, light metal) or DIN 68 121 “Wooden profiles for windows and portal doors”

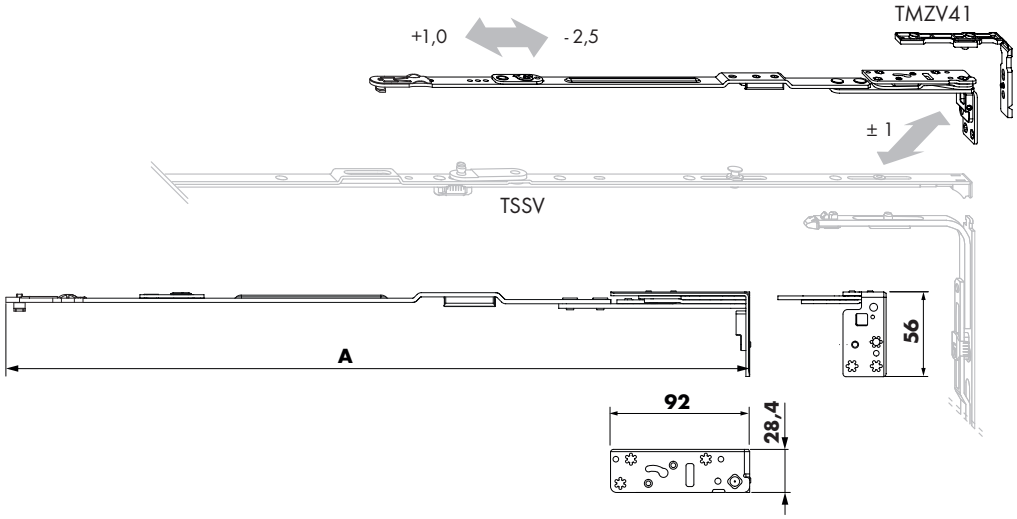

## Sales information

| Description | Part number | Surface | Colour | Box quantity |
|---|---|---|---|---|
| stay arm sz 1 AX 30/13 rh. | TSAV4211-10001_ | Titan Silver | without | 1 pc |
| | TSAV4211-10004_ | Titan Silver | without | 25 pcs |
| stay arm sz 1 AX 30/13 lh. | TSAV4212-10001_ | Titan Silver | without | 1 pc |
| | TSAV4212-10004_ | Titan Silver | without | 25 pcs |
| stay arm sz 2+3 AX 30/13 rh. | TSAV4221-10001_ | Titan Silver | without | 1 pc |
| | TSAV4221-10004_ | Titan Silver | without | 25 pcs |
| stay arm sz 2+3 AX 30/13 lh. | TSAV4222-10001_ | Titan Silver | without | 1 pc |
| | TSAV4222-10004_ | Titan Silver | without | 25 pcs |
| stay arm sz 4 AX 30/13 rh. | TSAV4231-10001_ | Titan Silver | without | 1 pc |
| | TSAV4231-10004_ | Titan Silver | without | 25 pcs |
| stay arm sz 4 AX 30/13 lh. | TSAV4232-10001_ | Titan Silver | without | 1 pc |
| | TSAV4232-10004_ | Titan Silver | without | 25 pcs |
| stay arm sz 5 AX 30/13 rh. | TSAV4241-10001_ | Titan Silver | without | 1 pc |
| | TSAV4241-10004_ | Titan Silver | without | 25 pcs |
| stay arm sz 5 AX 30/13 lh. | TSAV4242-10001_ | Titan Silver | without | 1 pc |
| | TSAV4242-10004_ | Titan Silver | without | 25 pcs |

## Technical information

| Part number | Description | FFB | Dimensions (mm) A | Dimensions (mm) B | Groove axis | sash weight | |
|---|---|---|---|---|---|---|---|
| TSAV4911-... | stay arm Ø8 sz 1 AX 34/13 rh. | 360 - 680 | 313 | 80 | 13 | 130 kg | 6 |
| TSAV4912-... | stay arm Ø8 sz 1 AX 34/13 lh. | 360 - 680 | 313 | 80 | 13 | 130 kg | 6 |
| TSAV4921-... | stay arm Ø8 sz 2+3 AX 34/13 rh. | 681 - 850 | 368 | 140 | 13 | 150 kg | 6 |
| TSAV4922-... | stay arm Ø8 sz 2+3 AX 34/13 lh. | 681 - 850 | 368 | 140 | 13 | 150 kg | 6 |
| TSAV4931-... | stay arm Ø8 sz 4 AX 34/13 rh. | 851 - 1050 | 398 | 140 | 13 | 150 kg | 6 |
| TSAV4932-... | stay arm Ø8 sz 4 AX 34/13 lh. | 851 - 1050 | 398 | 140 | 13 | 150 kg | 6 |
| TSAV4941-... | stay arm Ø8 sz 5 AX 34/13 rh. | 1051 - 1250 | 531 | 140 | 13 | 150 kg | 6 |
| TSAV4942-... | stay arm Ø8 sz 5 AX 34/13 lh. | 1051 - 1250 | 531 | 140 | 13 | 150 kg | 6 |



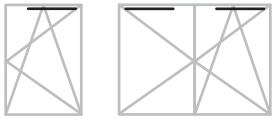

- Dimension B = opening width
- Fixing screws for the stay arm must be selected and fixed, so that the screw heads do not protrude beyond the respective base plate.

- **Please observe:**
  Guidelines/notes on the product and on liability (VHBH directive as well as the other applicable documents listed - directive can be downloaded at www.beschlagindustrie.de/ggsb/richtlinien.asp )
  Specifications from the profile manufacturers/system owners (PVC, light metal) or DIN 68 121 “Wooden profiles for windows and portal doors”

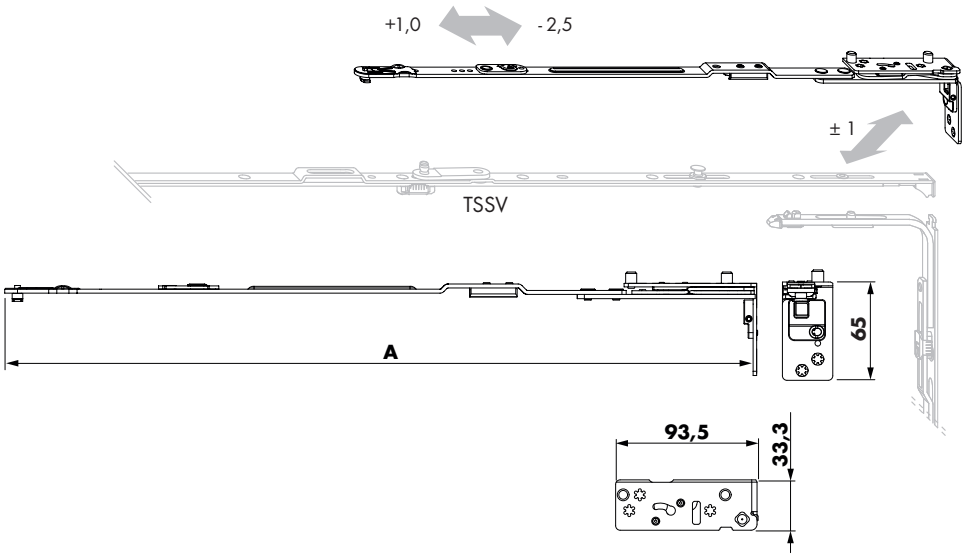

## Sales information

| Description | Part number | Surface | Colour | Box quantity |
|---|---|---|---|---|
| stay arm Ø8 sz 1 AX 34/13 rh. | TSAV4911-10001_ | Titan Silver | without | 1 pc |
| | TSAV4911-10004_ | Titan Silver | without | 25 pcs |
| stay arm Ø8 sz 1 AX 34/13 lh. | TSAV4912-10001_ | Titan Silver | without | 1 pc |
| | TSAV4912-10004_ | Titan Silver | without | 25 pcs |
| stay arm Ø8 sz 2+3 AX 34/13 rh. | TSAV4921-10001_ | Titan Silver | without | 1 pc |
| | TSAV4921-10004_ | Titan Silver | without | 25 pcs |
| stay arm Ø8 sz 2+3 AX 34/13 lh. | TSAV4922-10001_ | Titan Silver | without | 1 pc |
| | TSAV4922-10004_ | Titan Silver | without | 25 pcs |
| stay arm Ø8 sz 4 AX 34/13 rh. | TSAV4931-10001_ | Titan Silver | without | 1 pc |
| | TSAV4931-10004_ | Titan Silver | without | 25 pcs |
| stay arm Ø8 sz 4 AX 34/13 lh. | TSAV4932-10001_ | Titan Silver | without | 1 pc |
| | TSAV4932-10004_ | Titan Silver | without | 25 pcs |
| stay arm Ø8 sz 5 AX 34/13 rh. | TSAV4941-10001_ | Titan Silver | without | 1 pc |
| | TSAV4941-10004_ | Titan Silver | without | 25 pcs |
| stay arm Ø8 sz 5 AX 34/13 lh. | TSAV4942-10001_ | Titan Silver | without | 1 pc |
| | TSAV4942-10004_ | Titan Silver | without | 25 pcs |

## Technical information

| Part number | Description | FFB | Dimensions (mm) A | Dimensions (mm) B | Groove axis | sash weight | |
|---|---|---|---|---|---|---|---|
| TSAV4411-... | stay arm sz 1 AX C10/9 rh. | 380 - 680 | 313 | 80 | 9 | 130 kg | 0 |
| TSAV4412-... | stay arm sz 1 AX C10/9 lh. | 380 - 680 | 313 | 80 | 9 | 130 kg | 0 |
| TSAV4811-... | stay arm sz 1 AX C10/13 rh. | 380 - 680 | 313 | 80 | 13 | 130 kg | 0 |
| TSAV4812-... | stay arm sz 1 AX C10/13 lh. | 380 - 680 | 313 | 80 | 13 | 130 kg | 0 |
| TSAV4511-... | stay arm sz 1 AX C12/9 rh. | 380 - 680 | 313 | 80 | 9 | 130 kg | 0 |
| TSAV4512-... | stay arm sz 1 AX C12/9 lh. | 380 - 680 | 313 | 80 | 9 | 130 kg | 0 |
| TSAV4711-... | stay arm sz 1 AX C14/9 rh. | 380 - 680 | 313 | 80 | 9 | 130 kg | 0 |
| TSAV4712-... | stay arm sz 1 AX C14/9 lh. | 380 - 680 | 313 | 80 | 9 | 130 kg | 0 |
| TSAV4611-... | stay arm sz 1 AX C14/13 rh. | 380 - 680 | 313 | 80 | 13 | 130 kg | 0 |
| TSAV4612-... | stay arm sz 1 AX C14/13 lh. | 380 - 680 | 313 | 80 | 13 | 130 kg | 0 |
| TSAV4421-... | stay arm sz 2+3 AX C10/9 rh. | 681 - 850 | 368 | 140 | 9 | 150 kg | 0 |
| TSAV4422-... | stay arm sz 2+3 AX C10/9 lh. | 681 - 850 | 368 | 140 | 9 | 150 kg | 0 |
| TSAV4821-... | stay arm sz 2+3 AX C10/13 rh. | 681 - 850 | 368 | 140 | 13 | 150 kg | 0 |
| TSAV4822-... | stay arm sz 2+3 AX C10/13 lh. | 681 - 850 | 368 | 140 | 13 | 150 kg | 0 |
| TSAV4521-... | stay arm sz 2+3 AX C12/9 rh. | 681 - 850 | 368 | 140 | 9 | 150 kg | 0 |
| TSAV4522-... | stay arm sz 2+3 AX C12/9 lh. | 681 - 850 | 368 | 140 | 9 | 150 kg | 0 |
| TSAV4721-... | stay arm sz 2+3 AX C14/9 rh. | 681 - 850 | 368 | 140 | 9 | 150 kg | 0 |
| TSAV4722-... | stay arm sz 2+3 AX C14/9 lh. | 681 - 850 | 368 | 140 | 9 | 150 kg | 0 |
| TSAV4621-... | stay arm sz 2+3 AX C14/13 rh. | 681 - 850 | 368 | 140 | 13 | 150 kg | 0 |
| TSAV4622-... | stay arm sz 2+3 AX C14/13 lh. | 681 - 850 | 368 | 140 | 13 | 150 kg | 0 |
| TSAV4431-... | stay arm sz 4 AX C10/9 rh. | 851 - 1050 | 398 | 140 | 9 | 150 kg | 0 |
| TSAV4432-... | stay arm sz 4 AX C10/9 lh. | 851 - 1050 | 398 | 140 | 9 | 150 kg | 0 |
| TSAV4831-... | stay arm sz 4 AX C10/13 rh. | 851 - 1050 | 398 | 140 | 13 | 150 kg | 0 |
| TSAV4832-... | stay arm sz 4 AX C10/13 lh. | 851 - 1050 | 398 | 140 | 13 | 150 kg | 0 |
| TSAV4531-... | stay arm sz 4 AX C12/9 rh. | 851 - 1050 | 398 | 140 | 9 | 150 kg | 0 |
| TSAV4532-... | stay arm sz 4 AX C12/9 lh. | 851 - 1050 | 398 | 140 | 9 | 150 kg | 0 |
| TSAV4731-... | stay arm sz 4 AX C14/9 rh. | 851 - 1050 | 398 | 140 | 9 | 150 kg | 0 |
| TSAV4732-... | stay arm sz 4 AX C14/9 lh. | 851 - 1050 | 398 | 140 | 9 | 150 kg | 0 |
| TSAV4631-... | stay arm sz 4 AX C14/13 rh. | 851 - 1050 | 398 | 140 | 13 | 150 kg | 0 |
| TSAV4632-... | stay arm sz 4 AX C14/13 lh. | 851 - 1050 | 398 | 140 | 13 | 150 kg | 0 |
| TSAV4441-... | stay arm sz 5 AX C10/9 rh. | 1051 - 1250 | 531 | 140 | 9 | 150 kg | 0 |
| TSAV4442-... | stay arm sz 5 AX C10/9 lh. | 1051 - 1250 | 531 | 140 | 9 | 150 kg | 0 |
| TSAV4841-... | stay arm sz 5 AX C10/13 rh. | 1051 - 1250 | 531 | 140 | 13 | 150 kg | 0 |
| TSAV4842-... | stay arm sz 5 AX C10/13 lh. | 1051 - 1250 | 531 | 140 | 13 | 150 kg | 0 |
| TSAV4541-... | stay arm sz 5 AX C12/9 rh. | 1051 - 1250 | 531 | 140 | 9 | 150 kg | 0 |
| TSAV4542-... | stay arm sz 5 AX C12/9 lh. | 1051 - 1250 | 531 | 140 | 9 | 150 kg | 0 |
| TSAV4741-... | stay arm sz 5 AX C14/9 rh. | 1051 - 1250 | 531 | 140 | 9 | 150 kg | 0 |
| TSAV4742-... | stay arm sz 5 AX C14/9 lh. | 1051 - 1250 | 531 | 140 | 9 | 150 kg | 0 |
| TSAV4641-... | stay arm sz 5 AX C14/13 rh. | 1051 - 1250 | 531 | 140 | 13 | 150 kg | 0 |
| TSAV4642-... | stay arm sz 5 AX C14/13 lh. | 1051 - 1250 | 531 | 140 | 13 | 150 kg | 0 |

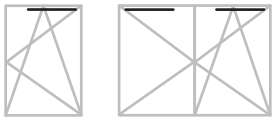



- Dimension B = opening width
- clampable
- for aluminium systems with 16 mm eurogroove (BAN)
- crt. profile-related accessories AX C required, see PDB TMZV41

- **Please observe:**
  Guidelines/notes on the product and on liability (VHBH directive as well as the other applicable documents listed - directive can be downloaded at www.beschlagindustrie.de/ggsb/richtlinien.asp )
  Specifications from the profile manufacturers/system owners (PVC, light metal) or DIN 68 121 “Wooden profiles for windows and portal doors”

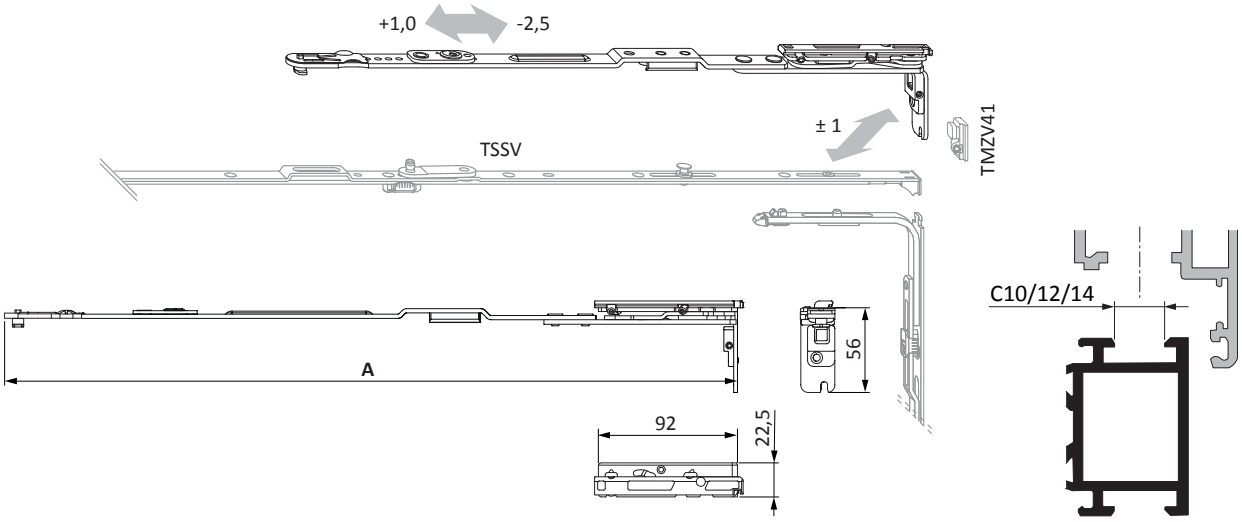

## Sales information

| Description | Part number | Surface | Colour | Box quantity |
|---|---|---|---|---|
| stay arm sz 1 AX C10/9 rh. | TSAV4411-10001_ | Titan Silver | without | 1 pc |
| | TSAV4411-10004_ | Titan Silver | without | 25 pcs |
| stay arm sz 1 AX C10/9 lh. | TSAV4412-10001_ | Titan Silver | without | 1 pc |
| | TSAV4412-10004_ | Titan Silver | without | 25 pcs |
| stay arm sz 1 AX C10/13 rh. | TSAV4811-10001_ | Titan Silver | without | 1 pc |
| | TSAV4811-10004_ | Titan Silver | without | 25 pcs |
| stay arm sz 1 AX C10/13 lh. | TSAV4812-10001_ | Titan Silver | without | 1 pc |
| | TSAV4812-10004_ | Titan Silver | without | 25 pcs |
| stay arm sz 1 AX C12/9 rh. | TSAV4511-10001_ | Titan Silver | without | 1 pc |
| | TSAV4511-10004_ | Titan Silver | without | 25 pcs |
| stay arm sz 1 AX C12/9 lh. | TSAV4512-10001_ | Titan Silver | without | 1 pc |
| | TSAV4512-10004_ | Titan Silver | without | 25 pcs |
| stay arm sz 1 AX C14/9 rh. | TSAV4711-10001_ | Titan Silver | without | 1 pc |
| | TSAV4711-10004_ | Titan Silver | without | 25 pcs |
| stay arm sz 1 AX C14/9 lh. | TSAV4712-10001_ | Titan Silver | without | 1 pc |
| | TSAV4712-10004_ | Titan Silver | without | 25 pcs |
| stay arm sz 1 AX C14/13 rh. | TSAV4611-10001_ | Titan Silver | without | 1 pc |
| | TSAV4611-10004_ | Titan Silver | without | 25 pcs |
| stay arm sz 1 AX C14/13 lh. | TSAV4612-10001_ | Titan Silver | without | 1 pc |
| | TSAV4612-10004_ | Titan Silver | without | 25 pcs |
| stay arm sz 2+3 AX C10/9 rh. | TSAV4421-10001_ | Titan Silver | without | 1 pc |
| | TSAV4421-10004_ | Titan Silver | without | 25 pcs |
| stay arm sz 2+3 AX C10/9 lh. | TSAV4422-10001_ | Titan Silver | without | 1 pc |
| | TSAV4422-10004_ | Titan Silver | without | 25 pcs |
| stay arm sz 2+3 AX C10/13 rh. | TSAV4821-10001_ | Titan Silver | without | 1 pc |
| | TSAV4821-10004_ | Titan Silver | without | 25 pcs |
| stay arm sz 2+3 AX C10/13 lh. | TSAV4822-10001_ | Titan Silver | without | 1 pc |
| | TSAV4822-10004_ | Titan Silver | without | 25 pcs |
| stay arm sz 2+3 AX C12/9 rh. | TSAV4521-10001_ | Titan Silver | without | 1 pc |
| | TSAV4521-10004_ | Titan Silver | without | 25 pcs |
| stay arm sz 2+3 AX C12/9 lh. | TSAV4522-10001_ | Titan Silver | without | 1 pc |
| | TSAV4522-10004_ | Titan Silver | without | 25 pcs |
| stay arm sz 2+3 AX C14/9 rh. | TSAV4721-10001_ | Titan Silver | without | 1 pc |
| | TSAV4721-10004_ | Titan Silver | without | 25 pcs |
| stay arm sz 2+3 AX C14/9 lh. | TSAV4722-10001_ | Titan Silver | without | 1 pc |
| | TSAV4722-10004_ | Titan Silver | without | 25 pcs |
| stay arm sz 2+3 AX C14/13 rh. | TSAV4621-10001_ | Titan Silver | without | 1 pc |
| | TSAV4621-10004_ | Titan Silver | without | 25 pcs |
| stay arm sz 2+3 AX C14/13 lh. | TSAV4622-10001_ | Titan Silver | without | 1 pc |
| | TSAV4622-10004_ | Titan Silver | without | 25 pcs |
| stay arm sz 4 AX C10/9 rh. | TSAV4431-10001_ | Titan Silver | without | 1 pc |
| | TSAV4431-10004_ | Titan Silver | without | 25 pcs |
| stay arm sz 4 AX C10/9 lh. | TSAV4432-10001_ | Titan Silver | without | 1 pc |
| | TSAV4432-10004_ | Titan Silver | without | 25 pcs |
| stay arm sz 4 AX C10/13 rh. | TSAV4831-10001_ | Titan Silver | without | 1 pc |
| | TSAV4831-10004_ | Titan Silver | without | 25 pcs |
| stay arm sz 4 AX C10/13 lh. | TSAV4832-10001_ | Titan Silver | without | 1 pc |
| | TSAV4832-10004_ | Titan Silver | without | 25 pcs |
| stay arm sz 4 AX C12/9 rh. | TSAV4531-10001_ | Titan Silver | without | 1 pc |
| | TSAV4531-10004_ | Titan Silver | without | 25 pcs |

## Sales information

| Description | Part number | Surface | Colour | Box quantity |
|---|---|---|---|---|
| stay arm sz 4 AX C12/9 lh. | TSAV4532-10001_ | Titan Silver | without | 1 pc |
| | TSAV4532-10004_ | Titan Silver | without | 25 pcs |
| stay arm sz 4 AX C14/9 rh. | TSAV4731-10001_ | Titan Silver | without | 1 pc |
| | TSAV4731-10004_ | Titan Silver | without | 25 pcs |
| stay arm sz 4 AX C14/9 lh. | TSAV4732-10001_ | Titan Silver | without | 1 pc |
| | TSAV4732-10004_ | Titan Silver | without | 25 pcs |
| stay arm sz 4 AX C14/13 rh. | TSAV4631-10001_ | Titan Silver | without | 1 pc |
| | TSAV4631-10004_ | Titan Silver | without | 25 pcs |
| stay arm sz 4 AX C14/13 lh. | TSAV4632-10001_ | Titan Silver | without | 1 pc |
| | TSAV4632-10004_ | Titan Silver | without | 25 pcs |
| stay arm sz 5 AX C10/9 rh. | TSAV4441-10001_ | Titan Silver | without | 1 pc |
| | TSAV4441-10004_ | Titan Silver | without | 25 pcs |
| stay arm sz 5 AX C10/9 lh. | TSAV4442-10001_ | Titan Silver | without | 1 pc |
| | TSAV4442-10004_ | Titan Silver | without | 25 pcs |
| stay arm sz 5 AX C10/13 rh. | TSAV4841-10001_ | Titan Silver | without | 1 pc |
| | TSAV4841-10004_ | Titan Silver | without | 25 pcs |
| stay arm sz 5 AX C10/13 lh. | TSAV4842-10001_ | Titan Silver | without | 1 pc |
| | TSAV4842-10004_ | Titan Silver | without | 25 pcs |
| stay arm sz 5 AX C12/9 rh. | TSAV4541-10001_ | Titan Silver | without | 1 pc |
| | TSAV4541-10004_ | Titan Silver | without | 25 pcs |
| stay arm sz 5 AX C12/9 lh. | TSAV4542-10001_ | Titan Silver | without | 1 pc |
| | TSAV4542-10004_ | Titan Silver | without | 25 pcs |
| stay arm sz 5 AX C14/9 rh. | TSAV4741-10001_ | Titan Silver | without | 1 pc |
| | TSAV4741-10004_ | Titan Silver | without | 25 pcs |
| stay arm sz 5 AX C14/9 lh. | TSAV4742-10001_ | Titan Silver | without | 1 pc |
| | TSAV4742-10004_ | Titan Silver | without | 25 pcs |
| stay arm sz 5 AX C14/13 rh. | TSAV4641-10001_ | Titan Silver | without | 1 pc |
| | TSAV4641-10004_ | Titan Silver | without | 25 pcs |
| stay arm sz 5 AX C14/13 lh. | TSAV4642-10001_ | Titan Silver | without | 1 pc |
| | TSAV4642-10004_ | Titan Silver | without | 25 pcs |

## Technical information

| Part number | Description | FFB | Dimensions (mm) A | Dimensions (mm) B | Groove axis | sash weight | |
|---|---|---|---|---|---|---|---|
| TSAV4151-... | stay arm TBT sz 1 AX 24/9 rh. | 380 - 680 | 313 | 80 | 9 | 130 kg | 5 |
| TSAV4152-... | stay arm TBT sz 1 AX 24/9 lh. | 380 - 680 | 313 | 80 | 9 | 130 kg | 5 |
| TSAV4051-... | stay arm TBT sz 1 AX 24/13 rh. | 380 - 680 | 313 | 80 | 13 | 130 kg | 5 |
| TSAV4052-... | stay arm TBT sz 1 AX 24/13 lh. | 380 - 680 | 313 | 80 | 13 | 130 kg | 5 |
| TSAV4161-... | stay arm TBT sz 2+3 AX 24/9 rh. | 681 - 850 | 368 | 140 | 9 | 150 kg | 5 |
| TSAV4162-... | stay arm TBT sz 2+3 AX 24/9 lh. | 681 - 850 | 368 | 140 | 9 | 150 kg | 5 |
| TSAV4061-... | stay arm TBT sz 2+3 AX 24/13 rh. | 681 - 850 | 368 | 140 | 13 | 150 kg | 5 |
| TSAV4062-... | stay arm TBT sz 2+3 AX 24/13 lh. | 681 - 850 | 368 | 140 | 13 | 150 kg | 5 |
| TSAV4171-... | stay arm TBT sz 4 AX 24/9 rh. | 851 - 1050 | 398 | 140 | 9 | 150 kg | 5 |
| TSAV4172-... | stay arm TBT sz 4 AX 24/9 lh. | 851 - 1050 | 398 | 140 | 9 | 150 kg | 5 |
| TSAV4071-... | stay arm TBT sz 4 AX 24/13 rh. | 851 - 1050 | 398 | 140 | 13 | 150 kg | 5 |
| TSAV4072-... | stay arm TBT sz 4 AX 24/13 lh. | 851 - 1050 | 398 | 140 | 13 | 150 kg | 5 |
| TSAV4181-... | stay arm TBT sz 5 AX 24/9 rh. | 1051 - 1250 | 531 | 140 | 9 | 150 kg | 5 |
| TSAV4182-... | stay arm TBT sz 5 AX 24/9 lh. | 1051 - 1250 | 531 | 140 | 9 | 150 kg | 5 |
| TSAV4081-... | stay arm TBT sz 5 AX 24/13 rh. | 1051 - 1250 | 531 | 140 | 13 | 150 kg | 5 |
| TSAV4082-... | stay arm TBT sz 5 AX 24/13 lh. | 1051 - 1250 | 531 | 140 | 13 | 150 kg | 5 |

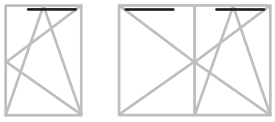

- Dimension B = opening width
- A special screw with a shank diameter of 4.5 mm must be used to fix the component
- Fixing screws for the stay arm must be selected and fixed, so that the screw heads do not protrude beyond the respective base plate.

- **Please observe:**
  Guidelines/notes on the product and on liability (VHBH directive as well as the other applicable documents listed - directive can be downloaded at www.beschlagindustrie.de/ggsb/richtlinien.asp )
  Specifications from the profile manufacturers/system owners (PVC, light metal) or DIN 68 121 “Wooden profiles for windows and portal doors”

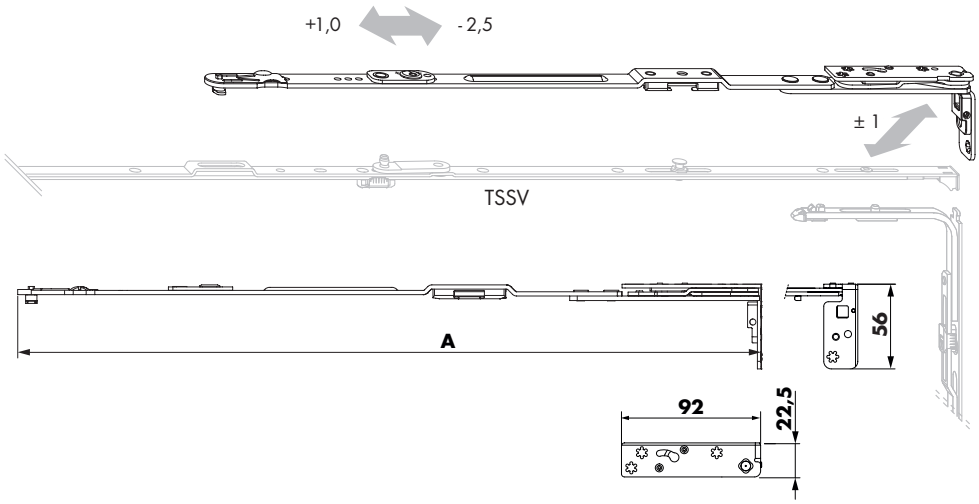

## Sales information

| Description | Part number | Surface | Colour | Box quantity |
|---|---|---|---|---|
| stay arm TBT sz 1 AX 24/9 rh. | TSAV4151-10001_ | Titan Silver | without | 1 pc |
| | TSAV4151-10004_ | Titan Silver | without | 25 pcs |
| stay arm TBT sz 1 AX 24/9 lh. | TSAV4152-10001_ | Titan Silver | without | 1 pc |
| | TSAV4152-10004_ | Titan Silver | without | 25 pcs |
| stay arm TBT sz 1 AX 24/13 rh. | TSAV4051-10001_ | Titan Silver | without | 1 pc |
| | TSAV4051-10004_ | Titan Silver | without | 25 pcs |
| stay arm TBT sz 1 AX 24/13 lh. | TSAV4052-10001_ | Titan Silver | without | 1 pc |
| | TSAV4052-10004_ | Titan Silver | without | 25 pcs |
| stay arm TBT sz 2+3 AX 24/9 rh. | TSAV4161-10001_ | Titan Silver | without | 1 pc |
| | TSAV4161-10004_ | Titan Silver | without | 25 pcs |
| stay arm TBT sz 2+3 AX 24/9 lh. | TSAV4162-10001_ | Titan Silver | without | 1 pc |
| | TSAV4162-10004_ | Titan Silver | without | 25 pcs |
| stay arm TBT sz 2+3 AX 24/13 rh. | TSAV4061-10001_ | Titan Silver | without | 1 pc |
| | TSAV4061-10004_ | Titan Silver | without | 25 pcs |
| stay arm TBT sz 2+3 AX 24/13 lh. | TSAV4062-10001_ | Titan Silver | without | 1 pc |
| | TSAV4062-10004_ | Titan Silver | without | 25 pcs |
| stay arm TBT sz 4 AX 24/9 rh. | TSAV4171-10001_ | Titan Silver | without | 1 pc |
| | TSAV4171-10004_ | Titan Silver | without | 25 pcs |
| stay arm TBT sz 4 AX 24/9 lh. | TSAV4172-10001_ | Titan Silver | without | 1 pc |
| | TSAV4172-10004_ | Titan Silver | without | 25 pcs |
| stay arm TBT sz 4 AX 24/13 rh. | TSAV4071-10001_ | Titan Silver | without | 1 pc |
| | TSAV4071-10004_ | Titan Silver | without | 25 pcs |
| stay arm TBT sz 4 AX 24/13 lh. | TSAV4072-10001_ | Titan Silver | without | 1 pc |
| | TSAV4072-10004_ | Titan Silver | without | 25 pcs |
| stay arm TBT sz 5 AX 24/9 rh. | TSAV4181-10001_ | Titan Silver | without | 1 pc |
| | TSAV4181-10004_ | Titan Silver | without | 25 pcs |
| stay arm TBT sz 5 AX 24/9 lh. | TSAV4182-10001_ | Titan Silver | without | 1 pc |
| | TSAV4182-10004_ | Titan Silver | without | 25 pcs |
| stay arm TBT sz 5 AX 24/13 rh. | TSAV4081-10001_ | Titan Silver | without | 1 pc |
| | TSAV4081-10004_ | Titan Silver | without | 25 pcs |
| stay arm TBT sz 5 AX 24/13 lh. | TSAV4082-10001_ | Titan Silver | without | 1 pc |
| | TSAV4082-10004_ | Titan Silver | without | 25 pcs |

## Technical information

| Part number | Description | FFB | Dimensions (mm) A | Dimensions (mm) B | Groove axis | sash weight | |
|---|---|---|---|---|---|---|---|
| TSAV4251-... | stay arm TBT sz 1 AX 30/13 rh. | 380 - 680 | 313 | 80 | 13 | 130 kg | 6 |
| TSAV4252-... | stay arm TBT sz 1 AX 30/13 lh. | 380 - 680 | 313 | 80 | 13 | 130 kg | 6 |
| TSAV4261-... | stay arm TBT sz 2+3 AX 30/13 rh. | 681 - 850 | 368 | 140 | 13 | 150 kg | 6 |
| TSAV4262-... | stay arm TBT sz 2+3 AX 30/13 lh. | 681 - 850 | 368 | 140 | 13 | 150 kg | 6 |
| TSAV4271-... | stay arm TBT sz 4 AX 30/13 rh. | 851 - 1050 | 398 | 140 | 13 | 150 kg | 6 |
| TSAV4272-... | stay arm TBT sz 4 AX 30/13 lh. | 851 - 1050 | 398 | 140 | 13 | 150 kg | 6 |
| TSAV4281-... | stay arm TBT sz 5 AX 30/13 rh. | 1051 - 1250 | 531 | 140 | 13 | 150 kg | 6 |
| TSAV4282-... | stay arm TBT sz 5 AX 30/13 lh. | 1051 - 1250 | 531 | 140 | 13 | 150 kg | 6 |



- Dimension B = opening width
- A special screw with a shank diameter of 4.5 mm must be used to fix the component
- Fixing screws for the stay arm must be selected and fixed, so that the screw heads do not protrude beyond the respective base plate.
- Crt. accessory AX profile related, see PDB TMZV41 - only required for PVC elements

- **Please observe:**
  Guidelines/notes on the product and on liability (VHBH directive as well as the other applicable documents listed - directive can be downloaded at www.beschlagindustrie.de/ggsb/richtlinien.asp )
  Specifications from the profile manufacturers/system owners (PVC, light metal) or DIN 68 121 “Wooden profiles for windows and portal doors”

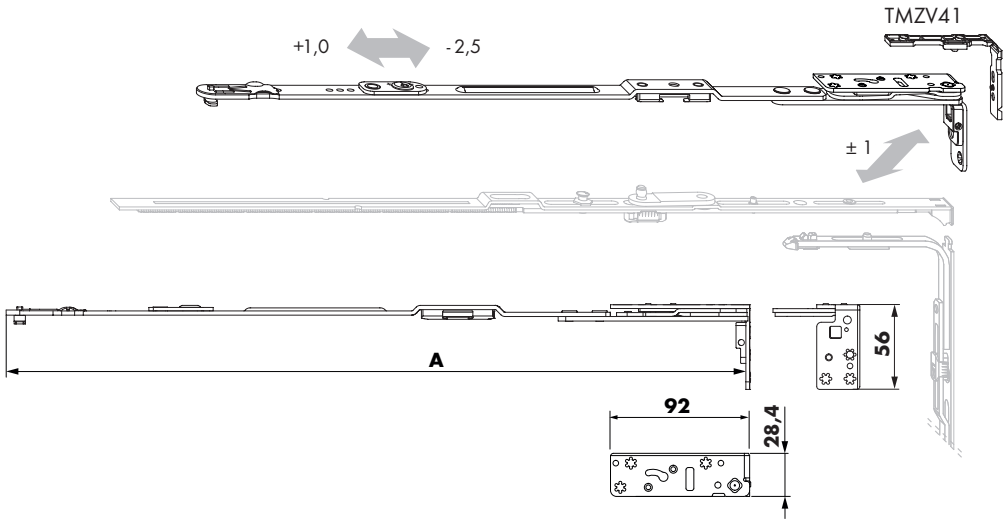

## Sales information

| Description | Part number | Surface | Colour | Box quantity |
|---|---|---|---|---|
| stay arm TBT sz 1 AX 30/13 rh. | TSAV4251-10001_ | Titan Silver | without | 1 pc |
| | TSAV4251-10004_ | Titan Silver | without | 25 pcs |
| stay arm TBT sz 1 AX 30/13 lh. | TSAV4252-10001_ | Titan Silver | without | 1 pc |
| | TSAV4252-10004_ | Titan Silver | without | 25 pcs |
| stay arm TBT sz 2+3 AX 30/13 rh. | TSAV4261-10001_ | Titan Silver | without | 1 pc |
| | TSAV4261-10004_ | Titan Silver | without | 25 pcs |
| stay arm TBT sz 2+3 AX 30/13 lh. | TSAV4262-10001_ | Titan Silver | without | 1 pc |
| | TSAV4262-10004_ | Titan Silver | without | 25 pcs |
| stay arm TBT sz 4 AX 30/13 rh. | TSAV4271-10001_ | Titan Silver | without | 1 pc |
| | TSAV4271-10004_ | Titan Silver | without | 25 pcs |
| stay arm TBT sz 4 AX 30/13 lh. | TSAV4272-10001_ | Titan Silver | without | 1 pc |
| | TSAV4272-10004_ | Titan Silver | without | 25 pcs |
| stay arm TBT sz 5 AX 30/13 rh. | TSAV4281-10001_ | Titan Silver | without | 1 pc |
| | TSAV4281-10004_ | Titan Silver | without | 25 pcs |
| stay arm TBT sz 5 AX 30/13 lh. | TSAV4282-10001_ | Titan Silver | without | 1 pc |
| | TSAV4282-10004_ | Titan Silver | without | 25 pcs |

## Technical information

| Part number | Description | FFB | Dimensions (mm) A | Dimensions (mm) B | Groove axis | sash weight | |
|---|---|---|---|---|---|---|---|
| TSAV4951-... | stay arm Ø8 TBT sz 1 AX 34/13 rh. | 360 - 680 | 313 | 80 | 13 | 130 kg | 6 |
| TSAV4952-... | stay arm Ø8 TBT sz 1 AX 34/13 lh. | 360 - 680 | 313 | 80 | 13 | 130 kg | 6 |
| TSAV4961-... | stay arm Ø8 TBT sz 2+3 AX 34/13 rh. | 681 - 850 | 368 | 140 | 13 | 150 kg | 6 |
| TSAV4962-... | stay arm Ø8 TBT sz 2+3 AX 34/13 lh. | 681 - 850 | 368 | 140 | 13 | 150 kg | 6 |
| TSAV4971-... | stay arm Ø8 TBT sz 4 AX 34/13 rh. | 851 - 1050 | 398 | 140 | 13 | 150 kg | 6 |
| TSAV4972-... | stay arm Ø8 TBT sz 4 AX 34/13 lh. | 851 - 1050 | 398 | 140 | 13 | 150 kg | 6 |
| TSAV4981-... | stay arm Ø8 TBT sz 5 AX 34/13 rh. | 1051 - 1250 | 531 | 140 | 13 | 150 kg | 6 |
| TSAV4982-... | stay arm Ø8 TBT sz 5 AX 34/13 lh. | 1051 - 1250 | 531 | 140 | 13 | 150 kg | 6 |



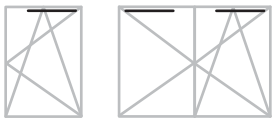

- Dimension B = opening width
- Fixing screws for the stay arm must be selected and fixed, so that the screw heads do not protrude beyond the respective base plate.

- **Please observe:**
  Guidelines/notes on the product and on liability (VHBH directive as well as the other applicable documents listed - directive can be downloaded at www.beschlagindustrie.de/ggsb/richtlinien.asp )
  Specifications from the profile manufacturers/system owners (PVC, light metal) or DIN 68 121 “Wooden profiles for windows and portal doors”

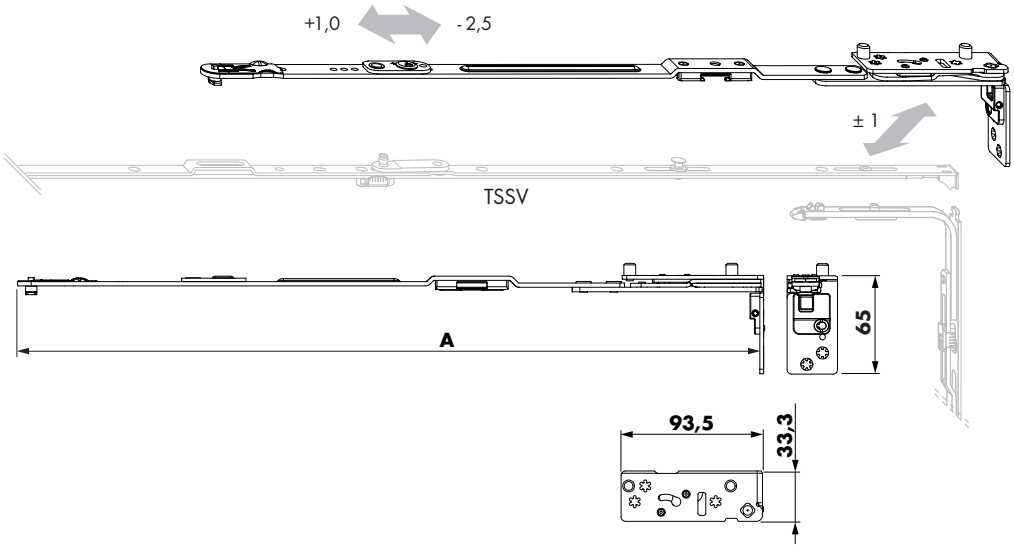

## Sales information

| Description | Part number | Surface | Colour | Box quantity |
|---|---|---|---|---|
| stay arm Ø8 TBT sz 1 AX 34/13 rh. | TSAV4951-10001_ | Titan Silver | without | 1 pc |
| | TSAV4951-10004_ | Titan Silver | without | 25 pcs |
| stay arm Ø8 TBT sz 1 AX 34/13 lh. | TSAV4952-10001_ | Titan Silver | without | 1 pc |
| | TSAV4952-10004_ | Titan Silver | without | 25 pcs |
| stay arm Ø8 TBT sz 2+3 AX 34/13 rh. | TSAV4961-10001_ | Titan Silver | without | 1 pc |
| | TSAV4961-10004_ | Titan Silver | without | 25 pcs |
| stay arm Ø8 TBT sz 2+3 AX 34/13 lh. | TSAV4962-10001_ | Titan Silver | without | 1 pc |
| | TSAV4962-10004_ | Titan Silver | without | 25 pcs |
| stay arm Ø8 TBT sz 4 AX 34/13 rh. | TSAV4971-10001_ | Titan Silver | without | 1 pc |
| | TSAV4971-10004_ | Titan Silver | without | 25 pcs |
| stay arm Ø8 TBT sz 4 AX 34/13 lh. | TSAV4972-10001_ | Titan Silver | without | 1 pc |
| | TSAV4972-10004_ | Titan Silver | without | 25 pcs |
| stay arm Ø8 TBT sz 5 AX 34/13 rh. | TSAV4981-10001_ | Titan Silver | without | 1 pc |
| | TSAV4981-10004_ | Titan Silver | without | 25 pcs |
| stay arm Ø8 TBT sz 5 AX 34/13 lh. | TSAV4982-10001_ | Titan Silver | without | 1 pc |
| | TSAV4982-10004_ | Titan Silver | without | 25 pcs |

## Technical information

| Part number | Description | FFB | Dimensions (mm) A | Dimensions (mm) B | Groove axis | sash weight | |
|---|---|---|---|---|---|---|---|
| TSAV4451-... | stay arm TBT sz 1 AX C10/9 rh. | 380 - 680 | 313 | 80 | 9 | 130 kg | 0 |
| TSAV4452-... | stay arm TBT sz 1 AX C10/9 lh. | 380 - 680 | 313 | 80 | 9 | 130 kg | 0 |
| TSAV4851-... | stay arm TBT sz 1 AX C10/13 rh. | 380 - 680 | 313 | 80 | 13 | 130 kg | 0 |
| TSAV4852-... | stay arm TBT sz 1 AX C10/13 lh. | 380 - 680 | 313 | 80 | 13 | 130 kg | 0 |
| TSAV4551-... | stay arm TBT sz 1 AX C12/9 rh. | 380 - 680 | 313 | 80 | 9 | 130 kg | 0 |
| TSAV4552-... | stay arm TBT sz 1 AX C12/9 lh. | 380 - 680 | 313 | 80 | 9 | 130 kg | 0 |
| TSAV4751-... | stay arm TBT sz 1 AX C14/9 rh. | 380 - 680 | 313 | 80 | 9 | 130 kg | 0 |
| TSAV4752-... | stay arm TBT sz 1 AX C14/9 lh. | 380 - 680 | 313 | 80 | 9 | 130 kg | 0 |
| TSAV4651-... | stay arm TBT sz 1 AX C14/13 rh. | 380 - 680 | 313 | 80 | 13 | 130 kg | 0 |
| TSAV4652-... | stay arm TBT sz 1 AX C14/13 lh. | 380 - 680 | 313 | 80 | 13 | 130 kg | 0 |
| TSAV4461-... | stay arm TBT sz 2+3 AX C10/9 rh. | 681 - 850 | 368 | 140 | 9 | 150 kg | 0 |
| TSAV4462-... | stay arm TBT sz 2+3 AX C10/9 lh. | 681 - 850 | 368 | 140 | 9 | 150 kg | 0 |
| TSAV4861-... | stay arm TBT sz 2+3 AX C10/13 rh. | 681 - 850 | 368 | 140 | 13 | 150 kg | 0 |
| TSAV4862-... | stay arm TBT sz 2+3 AX C10/13 lh. | 681 - 850 | 368 | 140 | 13 | 150 kg | 0 |
| TSAV4561-... | stay arm TBT sz 2+3 AX C12/9 rh. | 681 - 850 | 368 | 140 | 9 | 150 kg | 0 |
| TSAV4562-... | stay arm TBT sz 2+3 AX C12/9 lh. | 681 - 850 | 368 | 140 | 9 | 150 kg | 0 |
| TSAV4761-... | stay arm TBT sz 2+3 AX C14/9 rh. | 681 - 850 | 368 | 140 | 9 | 150 kg | 0 |
| TSAV4762-... | stay arm TBT sz 2+3 AX C14/9 lh. | 681 - 850 | 368 | 140 | 9 | 150 kg | 0 |
| TSAV4661-... | stay arm TBT sz 2+3 AX C14/13 rh. | 681 - 850 | 368 | 140 | 13 | 150 kg | 0 |
| TSAV4662-... | stay arm TBT sz 2+3 AX C14/13 lh. | 681 - 850 | 368 | 140 | 13 | 150 kg | 0 |
| TSAV4471-... | stay arm TBT sz 4 AX C10/9 rh. | 851 - 1050 | 398 | 140 | 9 | 150 kg | 0 |
| TSAV4472-... | stay arm TBT sz 4 AX C10/9 lh. | 851 - 1050 | 398 | 140 | 9 | 150 kg | 0 |
| TSAV4871-... | stay arm TBT sz 4 AX C10/13 rh. | 851 - 1050 | 398 | 140 | 13 | 150 kg | 0 |
| TSAV4872-... | stay arm TBT sz 4 AX C10/13 lh. | 851 - 1050 | 398 | 140 | 13 | 150 kg | 0 |
| TSAV4571-... | stay arm TBT sz 4 AX C12/9 rh. | 851 - 1050 | 398 | 140 | 9 | 150 kg | 0 |
| TSAV4572-... | stay arm TBT sz 4 AX C12/9 lh. | 851 - 1050 | 398 | 140 | 9 | 150 kg | 0 |
| TSAV4771-... | stay arm TBT sz 4 AX C14/9 rh. | 851 - 1050 | 398 | 140 | 9 | 150 kg | 0 |
| TSAV4772-... | stay arm TBT sz 4 AX C14/9 lh. | 851 - 1050 | 398 | 140 | 9 | 150 kg | 0 |
| TSAV4671-... | stay arm TBT sz 4 AX C14/13 rh. | 851 - 1050 | 398 | 140 | 13 | 150 kg | 0 |
| TSAV4672-... | stay arm TBT sz 4 AX C14/13 lh. | 851 - 1050 | 398 | 140 | 13 | 150 kg | 0 |
| TSAV4481-... | stay arm TBT sz 5 AX C10/9 rh. | 1051 - 1250 | 531 | 140 | 9 | 150 kg | 0 |
| TSAV4482-... | stay arm TBT sz 5 AX C10/9 lh. | 1051 - 1250 | 531 | 140 | 9 | 150 kg | 0 |
| TSAV4881-... | stay arm TBT sz 5 AX C10/13 rh. | 1051 - 1250 | 531 | 140 | 13 | 150 kg | 0 |
| TSAV4882-... | stay arm TBT sz 5 AX C10/13 lh. | 1051 - 1250 | 531 | 140 | 13 | 150 kg | 0 |
| TSAV4581-... | stay arm TBT sz 5 AX C12/9 rh. | 1051 - 1250 | 531 | 140 | 9 | 150 kg | 0 |
| TSAV4582-... | stay arm TBT sz 5 AX C12/9 lh. | 1051 - 1250 | 531 | 140 | 9 | 150 kg | 0 |
| TSAV4781-... | stay arm TBT sz 5 AX C14/9 rh. | 1051 - 1250 | 531 | 140 | 9 | 150 kg | 0 |
| TSAV4782-... | stay arm TBT sz 5 AX C14/9 lh. | 1051 - 1250 | 531 | 140 | 9 | 150 kg | 0 |
| TSAV4681-... | stay arm TBT sz 5 AX C14/13 rh. | 1051 - 1250 | 531 | 140 | 13 | 150 kg | 0 |
| TSAV4682-... | stay arm TBT sz 5 AX C14/13 lh. | 1051 - 1250 | 531 | 140 | 13 | 150 kg | 0 |

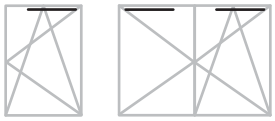



- Dimension B = opening width
- clampable
- for aluminium systems with 16 mm eurogroove (BAN)
- crt. profile-related accessories AX C required, see PDB TMZV41

- **Please observe:**
  Guidelines/notes on the product and on liability (VHBH directive as well as the other applicable documents listed - directive can be downloaded at www.beschlagindustrie.de/ggsb/richtlinien.asp )
  Specifications from the profile manufacturers/system owners (PVC, light metal) or DIN 68 121 “Wooden profiles for windows and portal doors”

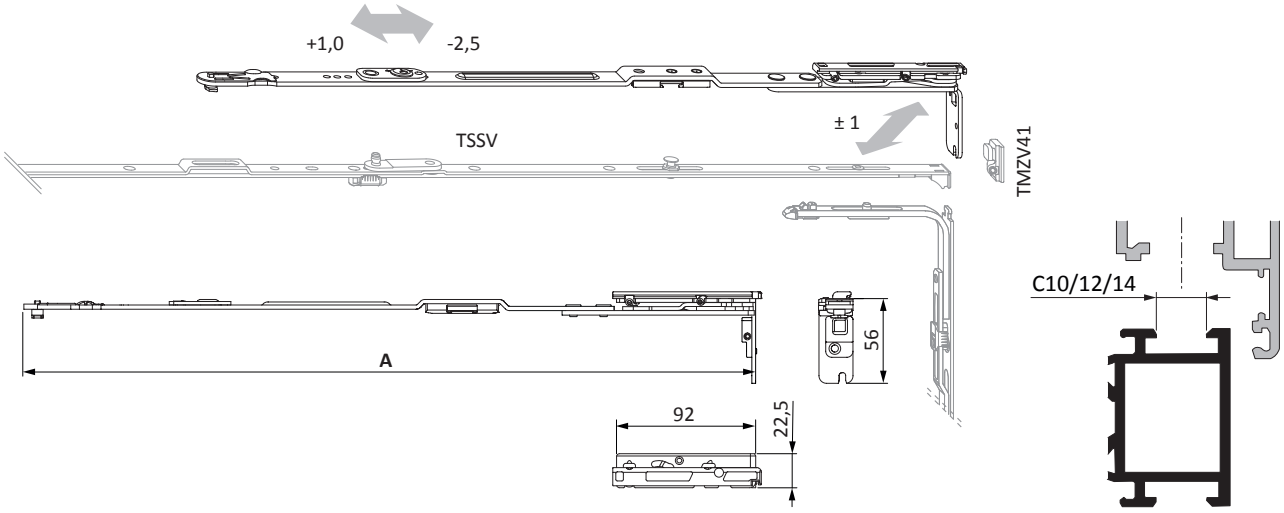

## Sales information

| Description | Part number | Surface | Colour | Box quantity |
|---|---|---|---|---|
| stay arm TBT sz 1 AX C10/9 rh. | TSAV4451-10001_ | Titan Silver | without | 1 pc |
| | TSAV4451-10004_ | Titan Silver | without | 25 pcs |
| stay arm TBT sz 1 AX C10/9 lh. | TSAV4452-10001_ | Titan Silver | without | 1 pc |
| | TSAV4452-10004_ | Titan Silver | without | 25 pcs |
| stay arm TBT sz 1 AX C10/13 rh. | TSAV4851-10001_ | Titan Silver | without | 1 pc |
| | TSAV4851-10004_ | Titan Silver | without | 25 pcs |
| stay arm TBT sz 1 AX C10/13 lh. | TSAV4852-10001_ | Titan Silver | without | 1 pc |
| | TSAV4852-10004_ | Titan Silver | without | 25 pcs |
| stay arm TBT sz 1 AX C12/9 rh. | TSAV4551-10001_ | Titan Silver | without | 1 pc |
| | TSAV4551-10004_ | Titan Silver | without | 25 pcs |
| stay arm TBT sz 1 AX C12/9 lh. | TSAV4552-10001_ | Titan Silver | without | 1 pc |
| | TSAV4552-10004_ | Titan Silver | without | 25 pcs |
| stay arm TBT sz 1 AX C14/9 rh. | TSAV4751-10001_ | Titan Silver | without | 1 pc |
| | TSAV4751-10004_ | Titan Silver | without | 25 pcs |
| stay arm TBT sz 1 AX C14/9 lh. | TSAV4752-10001_ | Titan Silver | without | 1 pc |
| | TSAV4752-10004_ | Titan Silver | without | 25 pcs |
| stay arm TBT sz 1 AX C14/13 rh. | TSAV4651-10001_ | Titan Silver | without | 1 pc |
| | TSAV4651-10004_ | Titan Silver | without | 25 pcs |
| stay arm TBT sz 1 AX C14/13 lh. | TSAV4652-10001_ | Titan Silver | without | 1 pc |
| | TSAV4652-10004_ | Titan Silver | without | 25 pcs |
| stay arm TBT sz 2+3 AX C10/9 rh. | TSAV4461-10001_ | Titan Silver | without | 1 pc |
| | TSAV4461-10004_ | Titan Silver | without | 25 pcs |
| stay arm TBT sz 2+3 AX C10/9 lh. | TSAV4462-10001_ | Titan Silver | without | 1 pc |
| | TSAV4462-10004_ | Titan Silver | without | 25 pcs |
| stay arm TBT sz 2+3 AX C10/13 rh. | TSAV4861-10001_ | Titan Silver | without | 1 pc |
| | TSAV4861-10004_ | Titan Silver | without | 25 pcs |
| stay arm TBT sz 2+3 AX C10/13 lh. | TSAV4862-10001_ | Titan Silver | without | 1 pc |
| | TSAV4862-10004_ | Titan Silver | without | 25 pcs |
| stay arm TBT sz 2+3 AX C12/9 rh. | TSAV4561-10001_ | Titan Silver | without | 1 pc |
| | TSAV4561-10004_ | Titan Silver | without | 25 pcs |
| stay arm TBT sz 2+3 AX C12/9 lh. | TSAV4562-10001_ | Titan Silver | without | 1 pc |
| | TSAV4562-10004_ | Titan Silver | without | 25 pcs |
| stay arm TBT sz 2+3 AX C14/9 rh. | TSAV4761-10001_ | Titan Silver | without | 1 pc |
| | TSAV4761-10004_ | Titan Silver | without | 25 pcs |
| stay arm TBT sz 2+3 AX C14/9 lh. | TSAV4762-10001_ | Titan Silver | without | 1 pc |
| | TSAV4762-10004_ | Titan Silver | without | 25 pcs |
| stay arm TBT sz 2+3 AX C14/13 rh. | TSAV4661-10001_ | Titan Silver | without | 1 pc |
| | TSAV4661-10004_ | Titan Silver | without | 25 pcs |
| stay arm TBT sz 2+3 AX C14/13 lh. | TSAV4662-10001_ | Titan Silver | without | 1 pc |
| | TSAV4662-10004_ | Titan Silver | without | 25 pcs |
| stay arm TBT sz 4 AX C10/9 rh. | TSAV4471-10001_ | Titan Silver | without | 1 pc |
| | TSAV4471-10004_ | Titan Silver | without | 25 pcs |
| stay arm TBT sz 4 AX C10/9 lh. | TSAV4472-10001_ | Titan Silver | without | 1 pc |
| | TSAV4472-10004_ | Titan Silver | without | 25 pcs |
| stay arm TBT sz 4 AX C10/13 rh. | TSAV4871-10001_ | Titan Silver | without | 1 pc |
| | TSAV4871-10004_ | Titan Silver | without | 25 pcs |
| stay arm TBT sz 4 AX C10/13 lh. | TSAV4872-10001_ | Titan Silver | without | 1 pc |
| | TSAV4872-10004_ | Titan Silver | without | 25 pcs |
| stay arm TBT sz 4 AX C12/9 rh. | TSAV4571-10001_ | Titan Silver | without | 1 pc |
| | TSAV4571-10004_ | Titan Silver | without | 25 pcs |

## Sales information

| Description | Part number | Surface | Colour | Box quantity |
|---|---|---|---|---|
| stay arm TBT sz 4 AX C12/9 lh. | TSAV4572-10001_ | Titan Silver | without | 1 pc |
| | TSAV4572-10004_ | Titan Silver | without | 25 pcs |
| stay arm TBT sz 4 AX C14/9 rh. | TSAV4771-10001_ | Titan Silver | without | 1 pc |
| | TSAV4771-10004_ | Titan Silver | without | 25 pcs |
| stay arm TBT sz 4 AX C14/9 lh. | TSAV4772-10001_ | Titan Silver | without | 1 pc |
| | TSAV4772-10004_ | Titan Silver | without | 25 pcs |
| stay arm TBT sz 4 AX C14/13 rh. | TSAV4671-10001_ | Titan Silver | without | 1 pc |
| | TSAV4671-10004_ | Titan Silver | without | 25 pcs |
| stay arm TBT sz 4 AX C14/13 lh. | TSAV4672-10001_ | Titan Silver | without | 1 pc |
| | TSAV4672-10004_ | Titan Silver | without | 25 pcs |
| stay arm TBT sz 5 AX C10/9 rh. | TSAV4481-10001_ | Titan Silver | without | 1 pc |
| | TSAV4481-10004_ | Titan Silver | without | 25 pcs |
| stay arm TBT sz 5 AX C10/9 lh. | TSAV4482-10001_ | Titan Silver | without | 1 pc |
| | TSAV4482-10004_ | Titan Silver | without | 25 pcs |
| stay arm TBT sz 5 AX C10/13 rh. | TSAV4881-10001_ | Titan Silver | without | 1 pc |
| | TSAV4881-10004_ | Titan Silver | without | 25 pcs |
| stay arm TBT sz 5 AX C10/13 lh. | TSAV4882-10001_ | Titan Silver | without | 1 pc |
| | TSAV4882-10004_ | Titan Silver | without | 25 pcs |
| stay arm TBT sz 5 AX C12/9 rh. | TSAV4581-10001_ | Titan Silver | without | 1 pc |
| | TSAV4581-10004_ | Titan Silver | without | 25 pcs |
| stay arm TBT sz 5 AX C12/9 lh. | TSAV4582-10001_ | Titan Silver | without | 1 pc |
| | TSAV4582-10004_ | Titan Silver | without | 25 pcs |
| stay arm TBT sz 5 AX C14/9 rh. | TSAV4781-10001_ | Titan Silver | without | 1 pc |
| | TSAV4781-10004_ | Titan Silver | without | 25 pcs |
| stay arm TBT sz 5 AX C14/9 lh. | TSAV4782-10001_ | Titan Silver | without | 1 pc |
| | TSAV4782-10004_ | Titan Silver | without | 25 pcs |
| stay arm TBT sz 5 AX C14/13 rh. | TSAV4681-10001_ | Titan Silver | without | 1 pc |
| | TSAV4681-10004_ | Titan Silver | without | 25 pcs |
| stay arm TBT sz 5 AX C14/13 lh. | TSAV4682-10001_ | Titan Silver | without | 1 pc |
| | TSAV4682-10004_ | Titan Silver | without | 25 pcs |

## Technical information

| Part number | Description | Groove axis | sash weight | |
|---|---|---|---|---|
| TSAV4191-... | stay arm DF AX 24/9 rh. | 9 | 100 kg | 5 |
| TSAV4192-... | stay arm DF AX 24/9 lh. | 9 | 100 kg | 5 |
| TSAV4091-... | stay arm DF AX 24/13 rh. | 13 | 100 kg | 5 |
| TSAV4092-... | stay arm DF AX 24/13 lh. | 13 | 100 kg | 5 |



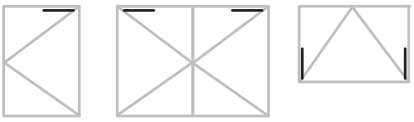

- The range of application conforms to the connecting components
- A special screw with a shank diameter of 4.5 mm must be used to fix the component
- Fixing screws for the stay arm must be selected and fixed, so that the screw heads do not protrude beyond the respective base plate.

- **Please observe:**
  Guidelines/notes on the product and on liability (VHBH directive as well as the other applicable documents listed - directive can be downloaded at www.beschlagindustrie.de/ggsb/richtlinien.asp )
  Specifications from the profile manufacturers/system owners (PVC, light metal) or DIN 68 121 “Wooden profiles for windows and portal doors”

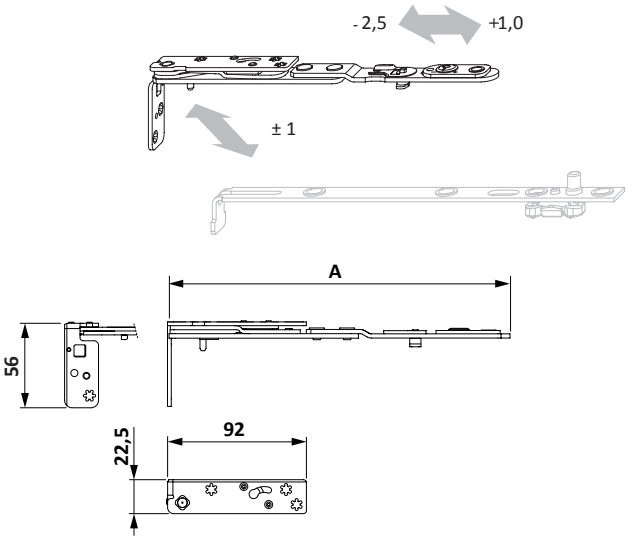


## Sales information

| Description | Part number | Surface | Colour | Box quantity |
|---|---|---|---|---|
| stay arm DF AX 24/9 rh. | TSAV4191-10001_ | Titan Silver | without | 1 pc |
| | TSAV4191-10004_ | Titan Silver | without | 25 pcs |
| stay arm DF AX 24/9 lh. | TSAV4192-10001_ | Titan Silver | without | 1 pc |
| | TSAV4192-10004_ | Titan Silver | without | 25 pcs |
| stay arm DF AX 24/13 rh. | TSAV4091-10001_ | Titan Silver | without | 1 pc |
| | TSAV4091-10004_ | Titan Silver | without | 25 pcs |
| stay arm DF AX 24/13 lh. | TSAV4092-10001_ | Titan Silver | without | 1 pc |
| | TSAV4092-10004_ | Titan Silver | without | 25 pcs |

## Technical information

| Part number | Description | Dimensions (mm) A | Groove axis | sash weight | |
|---|---|---|---|---|---|
| TSAV4101-... | stay arm DF/3 AX 24/13 rh. | 233 | 13 | 80 kg | 4 |
| TSAV4102-... | stay arm DF/3 AX 24/13 lh. | 233 | 13 | 80 kg | 4 |
| TSAV4201-... | stay arm DF/3 AX 24/9 rh. | 233 | 9 | 80 kg | 4 |
| TSAV4202-... | stay arm DF/3 AX 24/9 lh. | 233 | 9 | 80 kg | 4 |

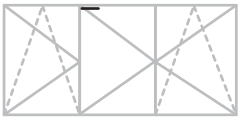

- The range of application conforms to the connecting components
- A special screw with a shank diameter of 4.5 mm must be used to fix the component
- Fixing screws for the stay arm must be selected and fixed, so that the screw heads do not protrude beyond the respective base plate.
- a = sash rebate edge slave sash

- **Please observe:**
  Guidelines/notes on the product and on liability (VHBH directive as well as the other applicable documents listed - directive can be downloaded at www.beschlagindustrie.de/ggsb/richtlinien.asp )
  Specifications from the profile manufacturers/system owners (PVC, light metal) or DIN 68 121 “Wooden profiles for windows and portal doors”

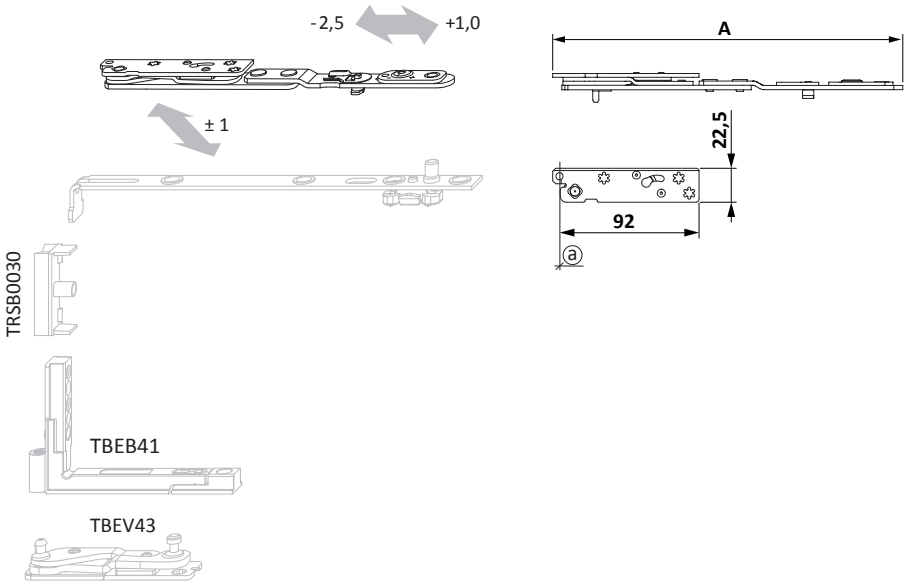


## Sales information

| Description | Part number | Surface | Colour | Box quantity |
|---|---|---|---|---|
| stay arm DF/3 AX 24/13 rh. | TSAV4101-10001_ | Titan Silver | without | 1 pc |
| | TSAV4101-10004_ | Titan Silver | without | 25 pcs |
| stay arm DF/3 AX 24/13 lh. | TSAV4102-10001_ | Titan Silver | without | 1 pc |
| | TSAV4102-10004_ | Titan Silver | without | 25 pcs |
| stay arm DF/3 AX 24/9 rh. | TSAV4201-10001_ | Titan Silver | without | 1 pc |
| | TSAV4201-10004_ | Titan Silver | without | 25 pcs |
| stay arm DF/3 AX 24/9 lh. | TSAV4202-10001_ | Titan Silver | without | 1 pc |
| | TSAV4202-10004_ | Titan Silver | without | 25 pcs |

## Technical information

| Part number | Description | Groove axis | sash weight | |
|---|---|---|---|---|
| TSAV4291-... | stay arm DF AX 30/13 rh. | 13 | 100 kg | 6 |
| TSAV4292-... | stay arm DF AX 30/13 lh. | 13 | 100 kg | 6 |



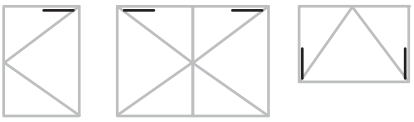

- The range of application conforms to the connecting components
- Crt. accessory AX profile related, see PDB TMZV41 - only required for PVC elements
- A special screw with a shank diameter of 4.5 mm must be used to fix the component
- Fixing screws for the stay arm must be selected and fixed, so that the screw heads do not protrude beyond the respective base plate.
- **Please observe:**
  Guidelines/notes on the product and on liability (VHBH directive as well as the other applicable documents listed - directive can be downloaded at www.beschlagindustrie.de/ggsb/richtlinien.asp )
  Specifications from the profile manufacturers/system owners (PVC, light metal) or DIN 68 121 “Wooden profiles for windows and portal doors”

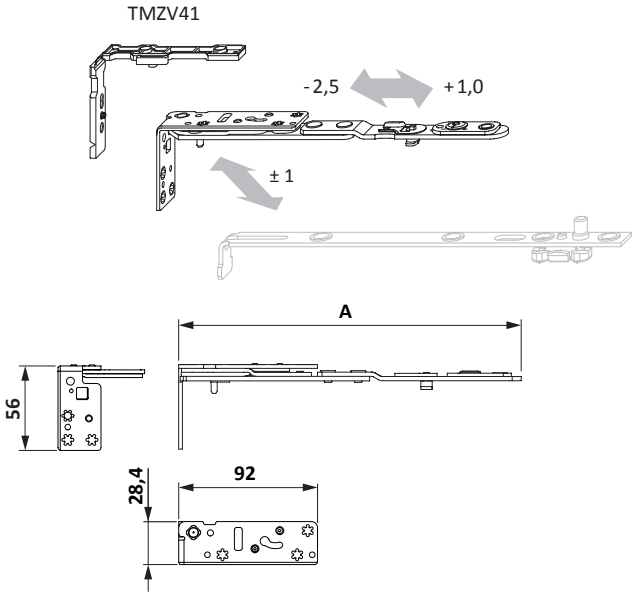


## Sales information

| Description | Part number | Surface | Colour | Box quantity |
|---|---|---|---|---|
| stay arm DF AX 30/13 rh. | TSAV4291-10001_ | Titan Silver | without | 1 pc |
| | TSAV4291-10004_ | Titan Silver | without | 25 pcs |
| stay arm DF AX 30/13 lh. | TSAV4292-10001_ | Titan Silver | without | 1 pc |
| | TSAV4292-10004_ | Titan Silver | without | 25 pcs |

## Technical information

| Part number | Description | Dimensions (mm) A | Groove axis | sash weight | |
|---|---|---|---|---|---|
| TSAV4301-... | stay arm DF/3 AX 30/13 rh. | 233 | 13 | 80 kg | 4 |
| TSAV4302-... | stay arm DF/3 AX 30/13 lh. | 233 | 13 | 80 kg | 4 |



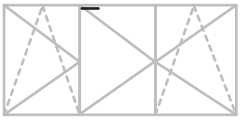

- The range of application conforms to the connecting components
- Crt. accessory AX profile related, see PDB TMZV41 - only required for PVC elements
- Trim packer TMZV41 as illustrated
- A special screw with a shank diameter of 4.5 mm must be used to fix the component
- Fixing screws for the stay arm must be selected and fixed, so that the screw heads do not protrude beyond the respective base plate.
- a = sash rebate edge slave sash

- **Please observe:**
  Guidelines/notes on the product and on liability (VHBH directive as well as the other applicable documents listed - directive can be downloaded at www.beschlagindustrie.de/ggsb/richtlinien.asp )
  Specifications from the profile manufacturers/system owners (PVC, light metal) or DIN 68 121 “Wooden profiles for windows and portal doors”

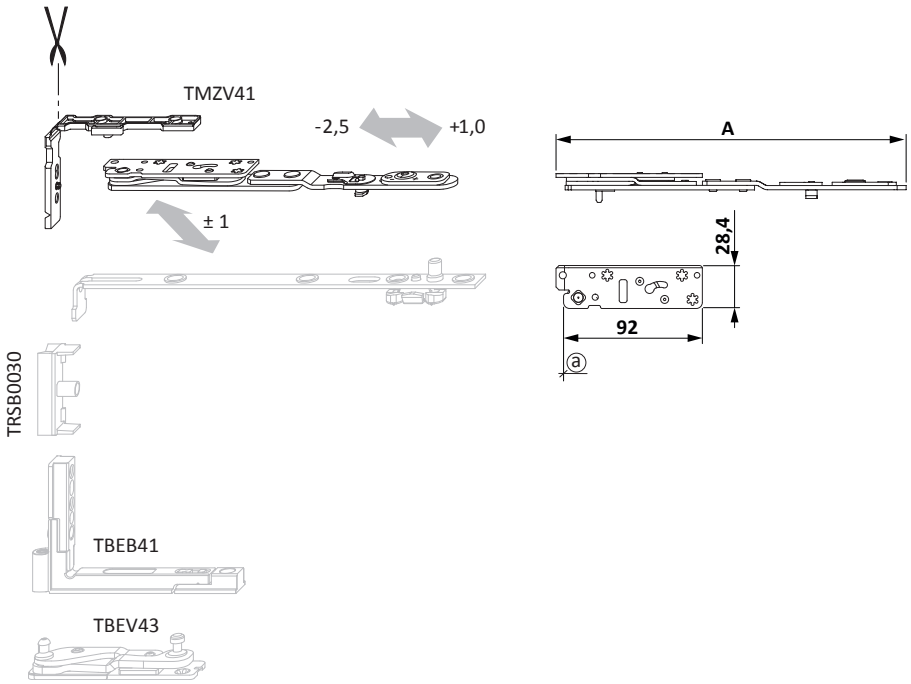


## Sales information

| Description | Part number | Surface | Colour | Box quantity |
|---|---|---|---|---|
| stay arm DF/3 AX 30/13 rh. | TSAV4301-10001_ | Titan Silver | without | 1 pc |
| | TSAV4301-10004_ | Titan Silver | without | 25 pcs |
| stay arm DF/3 AX 30/13 lh. | TSAV4302-10001_ | Titan Silver | without | 1 pc |
| | TSAV4302-10004_ | Titan Silver | without | 25 pcs |

## Technical information

| Part number | Description | Groove axis | sash weight | |
|---|---|---|---|---|
| TSAV4991-... | stay arm Ø8 DF AX 34/13 rh. | 13 | 100 kg | 6 |
| TSAV4992-... | stay arm Ø8 DF AX 34/13 lh. | 13 | 100 kg | 6 |



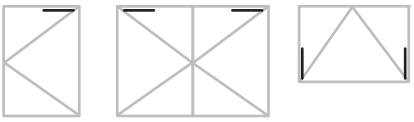

- The range of application conforms to the connecting components
- A special screw with a shank diameter of 4.5 mm must be used to fix the component

- **Please observe:**
  Guidelines/notes on the product and on liability (VHBH directive as well as the other applicable documents listed - directive can be downloaded at www.beschlagindustrie.de/ggsb/richtlinien.asp )
  Specifications from the profile manufacturers/system owners (PVC, light metal) or DIN 68 121 “Wooden profiles for windows and portal doors”

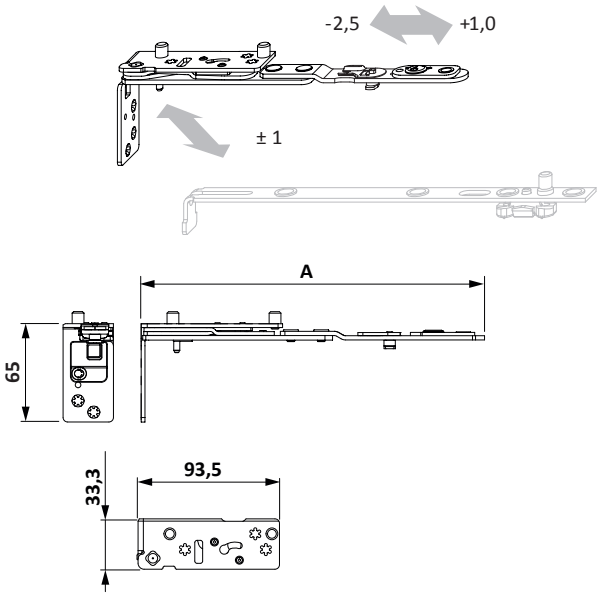


## Sales information

| Description | Part number | Surface | Colour | Box quantity |
|---|---|---|---|---|
| stay arm Ø8 DF AX 34/13 rh. | TSAV4991-10001_ | Titan Silver | without | 1 pc |
| | TSAV4991-10004_ | Titan Silver | without | 25 pcs |
| stay arm Ø8 DF AX 34/13 lh. | TSAV4992-10001_ | Titan Silver | without | 1 pc |
| | TSAV4992-10004_ | Titan Silver | without | 25 pcs |

## Technical information

| Part number | Description | Dimensions (mm) A | Groove axis | sash weight | |
|---|---|---|---|---|---|
| TSAV4491-... | stay arm DF AX C10/9 rh. | 228 | 9 | 100 kg | 0 |
| TSAV4492-... | stay arm DF AX C10/9 lh. | 228 | 9 | 100 kg | 0 |
| TSAV4891-... | stay arm DF AX C10/13 rh. | 228 | 13 | 100 kg | 0 |
| TSAV4892-... | stay arm DF AX C10/13 lh. | 228 | 13 | 100 kg | 0 |
| TSAV4591-... | stay arm DF AX C12/9 rh. | 228 | 9 | 100 kg | 0 |
| TSAV4592-... | stay arm DF AX C12/9 lh. | 228 | 9 | 100 kg | 0 |
| TSAV4791-... | stay arm DF AX C14/9 rh. | 228 | 9 | 100 kg | 0 |
| TSAV4791-... | stay arm DF AX C14/9 rh. | 228 | 9 | 100 kg | 0 |
| TSAV4792-... | stay arm DF AX C14/9 lh. | 228 | 9 | 100 kg | 0 |
| TSAV4792-... | stay arm DF AX C14/9 lh. | 228 | 9 | 100 kg | 0 |
| TSAV4691-... | stay arm DF AX C14/13 rh. | 228 | 13 | 100 kg | 0 |
| TSAV4692-... | stay arm DF AX C14/13 lh. | 228 | 13 | 100 kg | 0 |

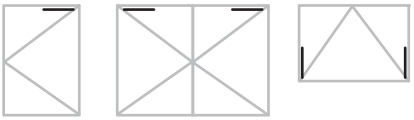

- clampable
- for aluminium systems with 16 mm eurogroove (BAN)
- The range of application conforms to the connecting components
- crt. profile-related accessories AX C required, see PDB TMZV41

- **Please observe:**
  Guidelines/notes on the product and on liability (VHBH directive as well as the other applicable documents listed - directive can be downloaded at www.beschlagindustrie.de/ggsb/richtlinien.asp )
  Specifications from the profile manufacturers/system owners (PVC, light metal) or DIN 68 121 “Wooden profiles for windows and portal doors”

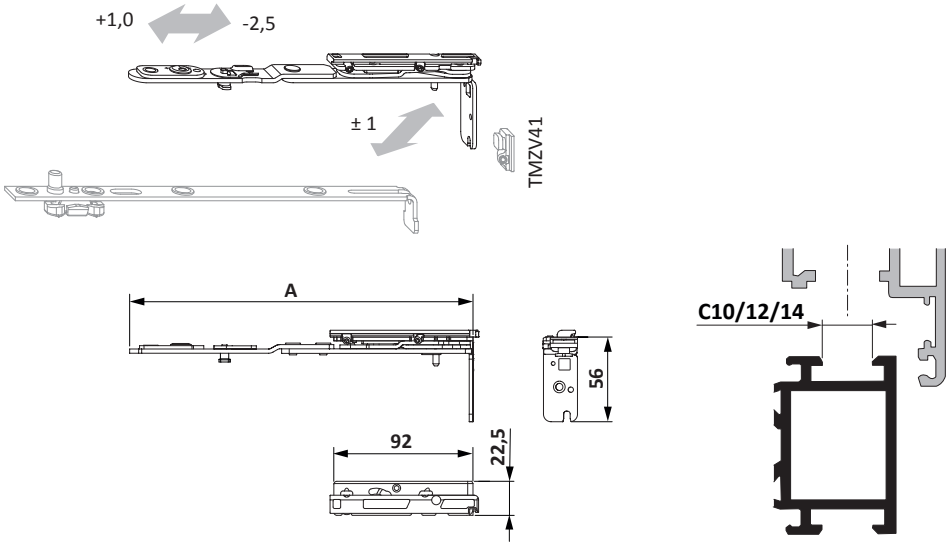

## Sales information

| Description | Part number | Surface | Colour | Box quantity |
|---|---|---|---|---|
| stay arm DF AX C10/9 rh. | TSAV4491-10001_ | Titan Silver | without | 1 pc |
| | TSAV4491-10004_ | Titan Silver | without | 25 pcs |
| stay arm DF AX C10/9 lh. | TSAV4492-10001_ | Titan Silver | without | 1 pc |
| | TSAV4492-10004_ | Titan Silver | without | 25 pcs |
| stay arm DF AX C10/13 rh. | TSAV4891-10001_ | Titan Silver | without | 1 pc |
| | TSAV4891-10004_ | Titan Silver | without | 25 pcs |
| stay arm DF AX C10/13 lh. | TSAV4892-10001_ | Titan Silver | without | 1 pc |
| | TSAV4892-10004_ | Titan Silver | without | 25 pcs |
| stay arm DF AX C12/9 rh. | TSAV4591-10001_ | Titan Silver | without | 1 pc |
| | TSAV4591-10004_ | Titan Silver | without | 25 pcs |
| stay arm DF AX C12/9 lh. | TSAV4592-10001_ | Titan Silver | without | 1 pc |
| | TSAV4592-10004_ | Titan Silver | without | 25 pcs |
| stay arm DF AX C14/9 rh. | TSAV4791-10004_ | Titan Silver | without | 25 pcs |
| stay arm DF AX C14/9 rh. | TSAV4791-10001_ | Titan Silver | without | 25 pcs |
| stay arm DF AX C14/9 lh. | TSAV4792-10004_ | Titan Silver | without | 25 pcs |
| stay arm DF AX C14/9 lh. | TSAV4792-10001_ | Titan Silver | without | 25 pcs |
| stay arm DF AX C14/13 rh. | TSAV4691-10001_ | Titan Silver | without | 1 pc |
| | TSAV4691-10004_ | Titan Silver | without | 25 pcs |
| stay arm DF AX C14/13 lh. | TSAV4692-10001_ | Titan Silver | without | 1 pc |
| | TSAV4692-10004_ | Titan Silver | without | 25 pcs |

## Technical information

| Part number | Description |
|---|---|
| TFKB0040-... | tilt restrictor V-V sz 2-4 .. |
| TFKB0050-... | tilt restrictor V-V sz 5 .. |



- When using the tilt restrictor V-V, a separate mishandling device is required!
- Restricts the scissor stay's projecting depth to 100 mm
- Only applicable on single-sashed elements and in secondary sashes main sash
- Notice for hinge system axxent SE:
  The tilt restrictor must be used on all units with weights > 100 kg.

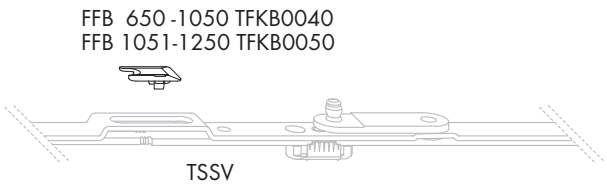


## Sales information

| Description | Part number | Surface | Colour | Box quantity |
|---|---|---|---|---|
| tilt restrictor V-V sz 2-4 .. | TFKB0040-02301_ | neutral | RAL9005 | 1 pc |
| | TFKB0040-02306_ | neutral | RAL9005 | 100 pcs |
| tilt restrictor V-V sz 5 .. | TFKB0050-02301_ | neutral | RAL9005 | 1 pc |
| | TFKB0050-02306_ | neutral | RAL9005 | 100 pcs |

## Technical information

| Part number | Description |
|---|---|
| ZXSC0010-... | S-screws 4,5x38 |
| ZXSC0020-... | S-screws PVC TX20 4,5x25 |

- To screw the bottom hinge and axxent 24+ stay arm
- The ZXSC0020 s-screw is not suitable for screwing into timber.



ZXSC0010

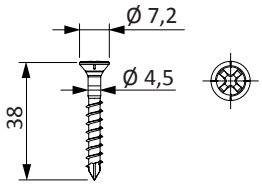


ZXSC0020

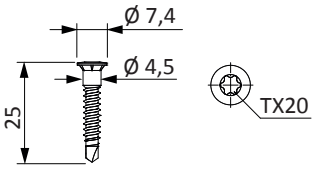


## Sales information

| Description | Part number | Surface | Colour | Box quantity |
|---|---|---|---|---|
| S-screws 4,5x38 | ZXSC0010-10001_ | Titan Silver | without | 1 pc |
| | ZXSC0010-10006_ | Titan Silver | without | 100 pcs |
| S-screws PVC TX20 4,5x25 | ZXSC0020-10008_ | Titan Silver | without | 500 pcs |

## Technical information

| Part number | Description |
|---|---|
| ZXSC4200-... | grub screw AX C M5x12,8 .. |



- For fixing the axxent 24+ bearing components in the clampable version.
- Spare part, the grub screw is included in the packaging unit of the bearing components.

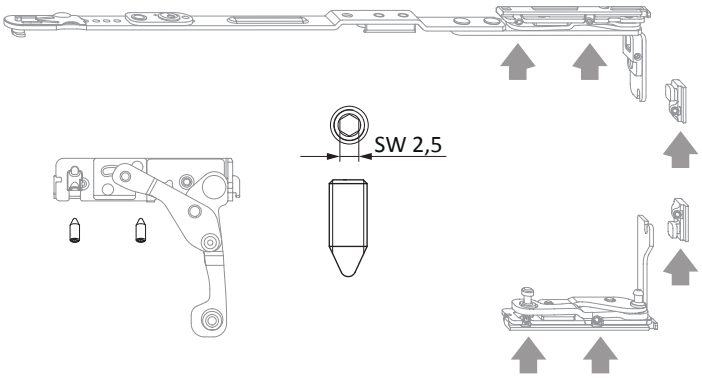


## Sales information

| Description | Part number | Surface | Colour | Box quantity |
|---|---|---|---|---|
| grub screw AX C M5x12,8 .. | ZXSC4200-10004_ | Titan Silver | without | 25 pcs |

## Technical information

| Part number | Description |
|---|---|
| TMZV4000-... | bag load transfer AX24+ |

- For elements of up to 185 kg sash weight.
- With sash weights > 150 kg:
  - The type of wood used must have a density 0,60 g/cm$^3$
  - Preferably use oak or a similarly hard wood
- Grease the ball bearing before installation.
- RC2 not possible
- Use enclosed screws for mounting.



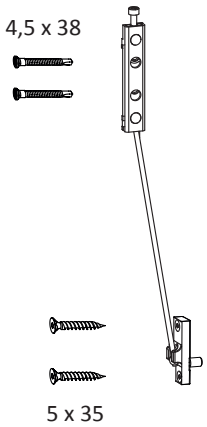


## Sales information

| Description | Part number | Surface | Colour | Box quantity |
|---|---|---|---|---|
| bag load transfer AX24+ | TMZV4000-10001_ | Titan Silver | without | 1 pc |
| | TMZV4000-10002_ | Titan Silver | without | 10 pcs |

## Drill holes and routings

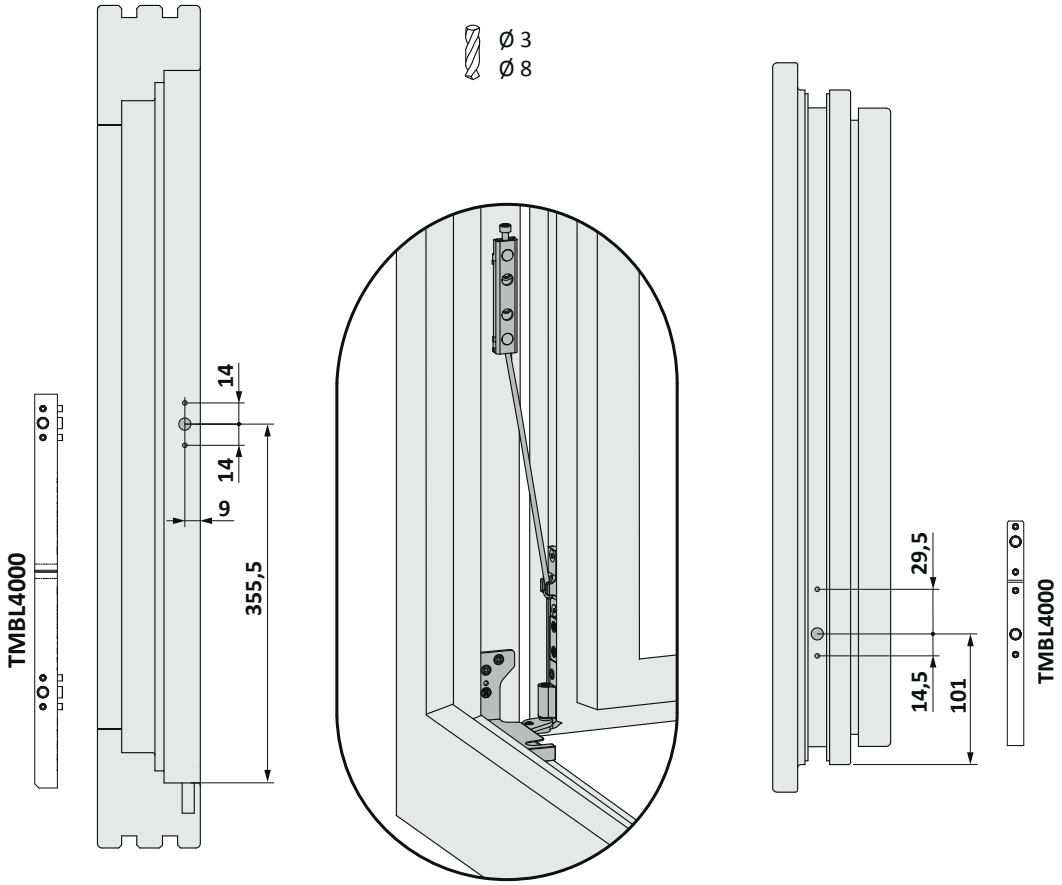

## Installation advice

- Hanging the load transfer:
  1. Drill holes.
  2. Hang sash. Load transfer is not engaged.
  3. Adjusting screw of the load transfer must be in the delivery state (dimension 9.5mm ).
  4. Turn the sash open slightly (~ 20° opening angle).
  5. Insert the ball of the suspension cable into the top hinge (sash part)
  6. Open sash 90°.
  7. Adjust the height of the adjusting screw in such a way that the suspension cable is in tension from an opening angle of approx. 20°. (Dimension ~ 4.5mm).

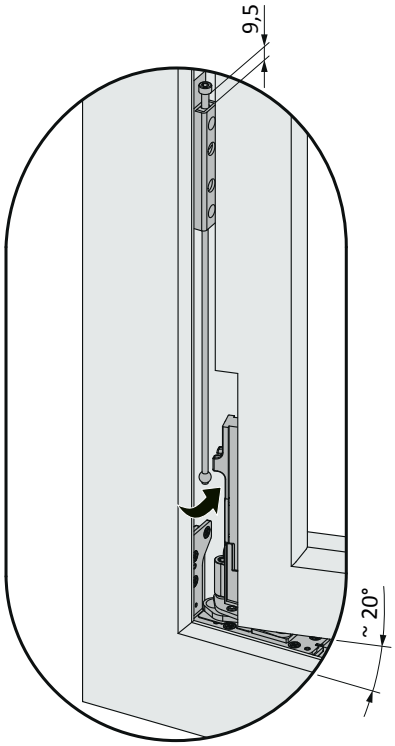


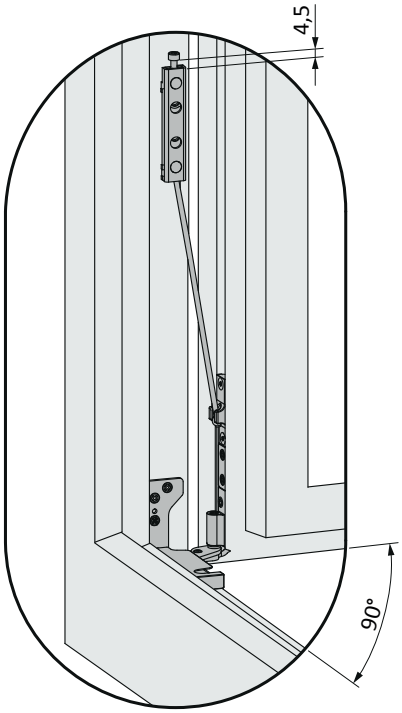

| Description | Material | Page |
|---|---|---|
| corner hinge SE | TBEB1001, TBEB1002, TFFS0020 | 1.5 - 2 |
| bottom hinge SE | TBEV1001, TBEV1002 | 1.5 - 4 |
| corn.drive SE VSU/K+ FH/FBS | TEUL5140 | 1.5 - 5 |
| corn.drive SE VSU/K 56+ narrow | TEUL5170 | 1.5 - 6 |
| corner drive AF BSO/K3 | TEUL2470 | 1.5 - 7 |
| corner drive AF BSO/K3+ | TEUL2460 | 1.5 - 8 |
| locking part SE VSU/K+ | TEVR1550 | 1.5 - 9 |
| linkage BS SE | TZBS1010, TZBS1020 | 1.5 - 10 |
| stay sash part SE | TSSV1000, TSSV1010, TSSV1020, TSSV1030 | 1.5 - 12 |
| stay sash part SE DF | TSSV1041, TSSV1042 | 1.5 - 13 |
| stay arm SE | TSAV1001, TSAV1002, TSAV1011, TSAV1012, TSAV1021, TSAV1022, TSAV1031, TSAV1032 | 1.5 - 14 |
| stay arm SE/TBT | TSAV1041, TSAV1042, TSAV1051, TSAV1052, TSAV1061, TSAV1062, TSAV1071, TSAV1072 | 1.5 - 16 |
| stay arm SE DF | TSAV1081, TSAV1082 | 1.5 - 18 |
| cover rail | 707845 | 1.5 - 19 |
| striker plate BS/Z SE | TRZV1020 | 1.5 - 20 |
| tilt restrictor V-V | TFKB0040, TFKB0050 | 1.5 - 21 |
| sash part MV SE | TFMV0070 | 1.5 - 22 |

## Technical information

| Part number | Description | Airgap | Groove axis | sash weight | |
|---|---|---|---|---|---|
| TBEB1001-... | corner hinge SE .. rh. | 12 | - | 130 kg | 5 |
| TBEB1002-... | corner hinge SE .. lh. | 12 | - | 130 kg | 5 |
| TFFS0020-... | distance piece SE EB/DF 12/..-9 | 12 | 9 | - | - |



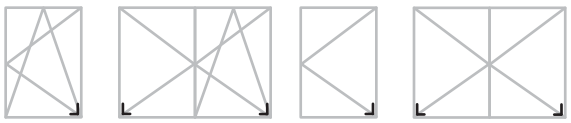

- **Please observe:**
  Guidelines/notes on the product and on liability (VHBH directive as well as the other applicable documents listed - directive can be downloaded at www.beschlagindustrie.de/ggsb/richtlinien.asp )
  Specifications from the profile manufacturers/system owners (PVC, light metal) or DIN 68 121 “Wooden profiles for windows and portal doors”

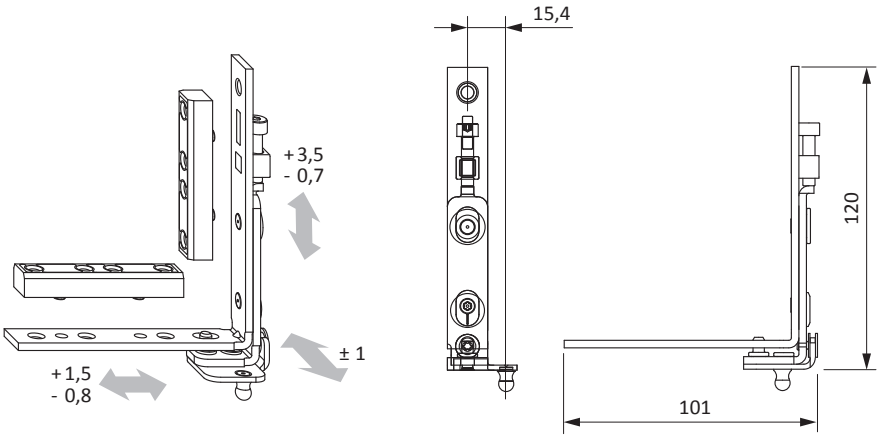


## Sales information

| Description | Part number | Surface | Colour | Box quantity |
|---|---|---|---|---|
| corner hinge SE .. rh. | TBEB1001-10001_ | Titan Silver | without | 1 pc |
| | TBEB1001-10004_ | Titan Silver | without | 25 pcs |
| corner hinge SE .. lh. | TBEB1002-10001_ | Titan Silver | without | 1 pc |
| | TBEB1002-10004_ | Titan Silver | without | 25 pcs |
| distance piece SE EB/DF 12/..-9 | TFFS0020-09901_ | neutral | black/undefined | 1 pc |
| | TFFS0020-09906_ | neutral | black/undefined | 100 pcs |

## Technical details

- profile section SE

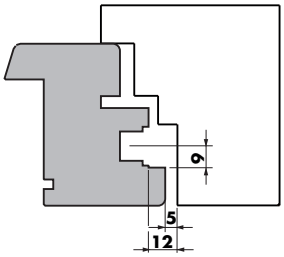

## Technical information

| Part number | Description | Airgap | sash weight | |
|---|---|---|---|---|
| TBEV1001-... | bottom hinge SE .. rh. | 12 | 130 kg | 2 |
| TBEV1002-... | bottom hinge SE .. lh. | 12 | 130 kg | 2 |

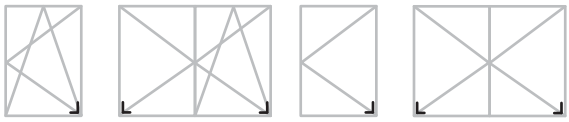

1.5

- * The depth dimension needs to be respected with a tolerance of +0.5mm
- Fixing screws for the bottom hinge must be selected and fixed, so that the screw heads do not protrude beyond the respective base plate.

- **Please observe:**
  Guidelines/notes on the product and on liability (VHBH directive as well as the other applicable documents listed - directive can be downloaded at www.beschlagindustrie.de/ggsb/richtlinien.asp )
  Specifications from the profile manufacturers/system owners (PVC, light metal) or DIN 68 121 “Wooden profiles for windows and portal doors”

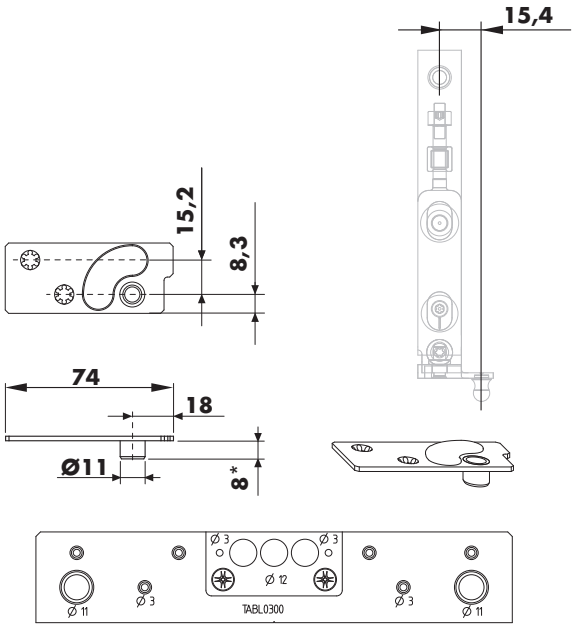


## Sales information

| Description | Part number | Surface | Colour | Box quantity |
|---|---|---|---|---|
| bottom hinge SE .. rh. | TBEV1001-10001_ | Titan Silver | without | 1 pc |
| | TBEV1001-10004_ | Titan Silver | without | 25 pcs |
| bottom hinge SE .. lh. | TBEV1002-10001_ | Titan Silver | without | 1 pc |
| | TBEV1002-10004_ | Titan Silver | without | 25 pcs |

## Technical information

| Part number | Description | Dimensions (mm) | | | |
|---|---|---|---|---|---|
| | | A | B | | |
| TEUL5140-... | corn.drive AFSE VSU/K+FH FBS1S | 140 | 210 | 1 | 4 |

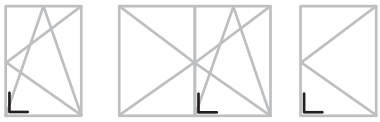

- Run up block for sash lift FBS, refer to PDB line item TRAU
- Tilt lock bearing S-ES FH TBT profile-related, refer to PDB line item FRKB
- Tilt lock bearing S-ES (SL-S) FH profile-related, refer to PDB line item FRKA (FRKJ)

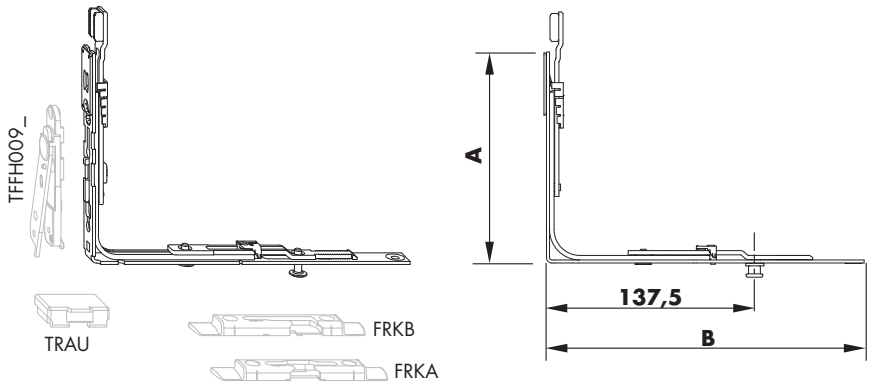


## Sales information

| Description | Part number | Surface | Colour | Box quantity |
|---|---|---|---|---|
| corn.drive AFSE VSU/K+FH FBS1S | TEUL5140-10001_ | Titan Silver | without | 1 pc |
| | TEUL5140-10005_ | Titan Silver | without | 50 pcs |

## Technical information

| Part number | Description | Dimensions (mm) | | | |
|---|---|---|---|---|---|
| | | A | B | | |
| TEUL5170-... | corn.drive AFSEVSU/K 56+nar.1S | 38 | 210 | 1 | 3 |



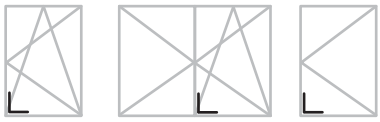

- Applicable on basic security and RC1
- Tilt lock bearing S-ES (SL-S) FH profile-related, refer to PDB line item FRKA (FRKJ)
- Tilt lock bearing S-ES FH TBT profile-related, refer to PDB line item FRKB

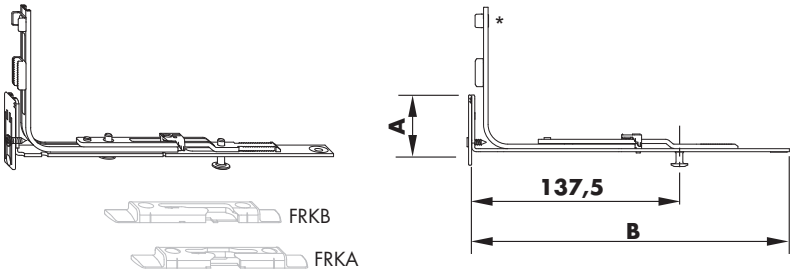


## Sales information

| Description | Part number | Surface | Colour | Box quantity |
|---|---|---|---|---|
| corn.drive AFSEVSU/K 56+nar.1S | TEUL5170-10001_ | Titan Silver | without | 1 pc |
| | TEUL5170-10005_ | Titan Silver | without | 50 pcs |

## Technical information

| Part number | Description | FFH | Dimensions (mm) A | | |
|---|---|---|---|---|---|
| TEUL2470-... | corn.drive AF BSO/K3 | 801 - 3000 | 261 | 0 | 2 |

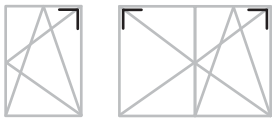

- For basic security



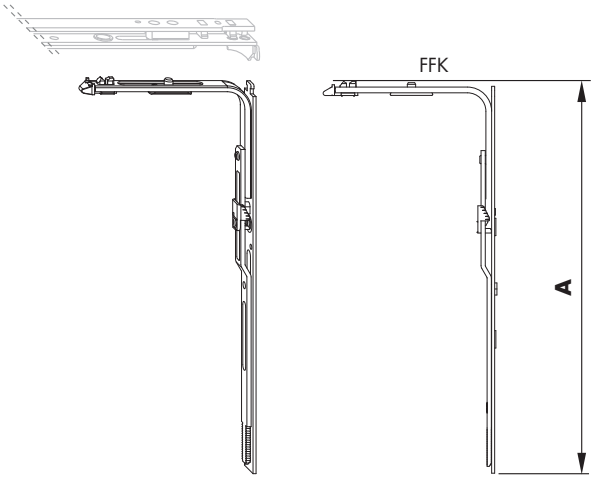


## Sales information

| Description | Part number | Surface | Colour | Box quantity |
|---|---|---|---|---|
| corn.drive AF BSO/K3 | TEUL2470-10001_ | Titan Silver | without | 1 pc |
| | TEUL2470-10004_ | Titan Silver | without | 25 pcs |

## Technical information

| Part number | Description | FFH | Dimensions (mm) A | | |
|---|---|---|---|---|---|
| TEUL2460-... | corn.drive BSO/K3+ | 801 - 3000 | 261 | 0 | 3 |



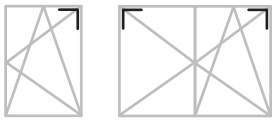

- Coupling location to slide underneath
- Applicable on basic security and RC1

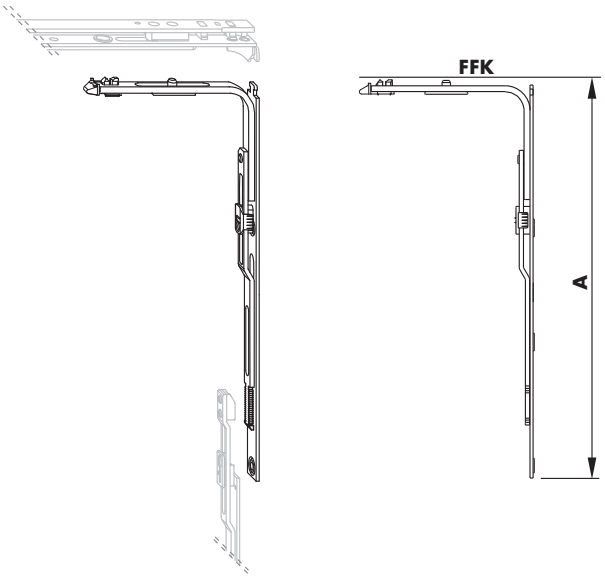


## Sales information

| Description | Part number | Surface | Colour | Box quantity |
|---|---|---|---|---|
| corn.drive BSO/K3+ | TEUL2460-10001_ | Titan Silver | without | 1 pc |
| | TEUL2460-10005_ | Titan Silver | without | 50 pcs |

## Technical information

| Part number | Description | Dimensions (mm) A | | |
|---|---|---|---|---|
| TEVR1550-... | locking part SE VSU/K 56+ 1S | 210 | 1 | 2 |

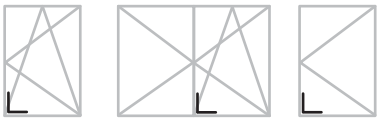

- Tilt lock bearing S-ES FH TBT profile-related, refer to PDB line item FRKB
- Tilt lock bearing S-ES (SL-S) FH profile-related, refer to PDB line item FRKA (FRKJ)

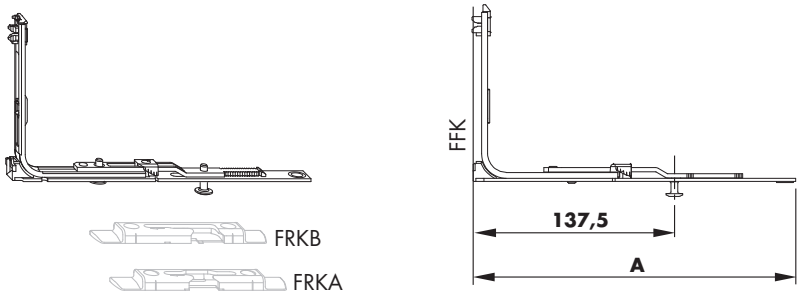


## Sales information

| Description | Part number | Surface | Colour | Box quantity |
|---|---|---|---|---|
| locking part SE VSU/K 56+ 1S | TEVR1550-10001_ | Titan Silver | without | 1 pc |
| | TEVR1550-10005_ | Titan Silver | without | 50 pcs |

## Technical information

| Part number | Description | Dimensions (mm) | | | |
|---|---|---|---|---|---|
| | | A | B | | |
| TZBS1010-... | linkage BS SE sz 1 1Z | 404 | 252 | 1 | 4 |
| TZBS1020-... | linkage BS SE sz 2 1Z | 750 | 598 | 1 | 5 |



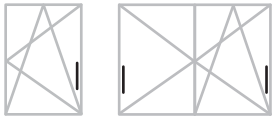

- In conjunction with striker plate BS/Z SE, TRZV1020

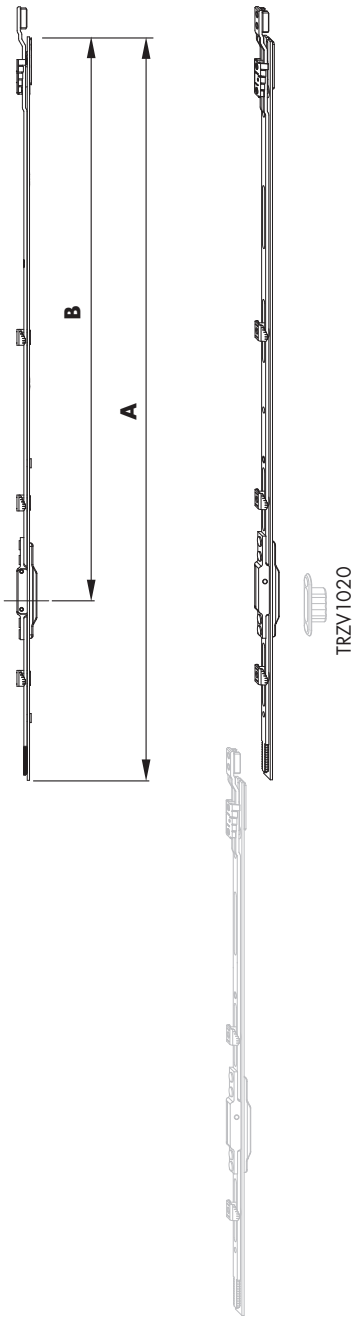

## Sales information

| Description | Part number | Surface | Colour | Box quantity |
|---|---|---|---|---|
| linkage BS SE sz 1 1Z | TZBS1010-10001_ | Titan Silver | without | 1 pc |
| | TZBS1010-10004_ | Titan Silver | without | 25 pcs |
| linkage BS SE sz 2 1Z | TZBS1020-10001_ | Titan Silver | without | 1 pc |
| | TZBS1020-10004_ | Titan Silver | without | 25 pcs |

## Technical details

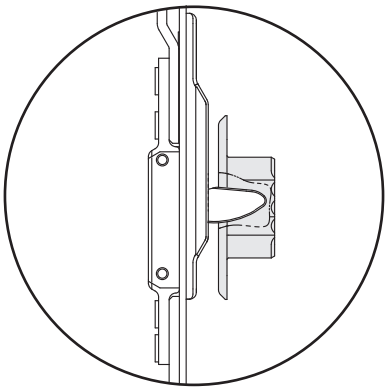

## Technical information

| Part number | Description | FFB | Dimensions (mm) | | | Airgap | Groove axis | sash weight | | |
|---|---|---|---|---|---|---|---|---|---|---|
| | | | A | B | C | | | | | |
| TSSV1000-... | stay sash part SE AF sz 1 | 360 - 650 | 520 | - | 215 | 12 | 9 | 130 kg | 0 | 2 |
| TSSV1010-... | stay sash part SE AF sz2+3 1RS | 651 - 850 | 710 | 433 | 202 | 12 | 9 | 130 kg | 1 | 4 |
| TSSV1020-... | stay sash part SE AF sz 4 1RS | 851 - 1050 | 910 | 553 | 202 | 12 | 9 | 130 kg | 1 | 7 |
| TSSV1030-... | stay sash part SE AF sz 5 1RS | 1051 - 1250 | 1110 | 753 | 202 | 12 | 9 | 130 kg | 1 | 8 |



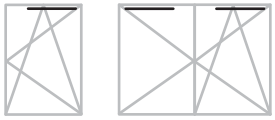

- Notice for hinge system axxent SE:
  The tilt restrictor must be used on all units with weights > 100 kg.

- **Please observe:**
  Guidelines/notes on the product and on liability (VHBH directive as well as the other applicable documents listed - directive can be downloaded at www.beschlagindustrie.de/ggsb/richtlinien.asp )
  Specifications from the profile manufacturers/system owners (PVC, light metal) or DIN 68 121 “Wooden profiles for windows and portal doors”

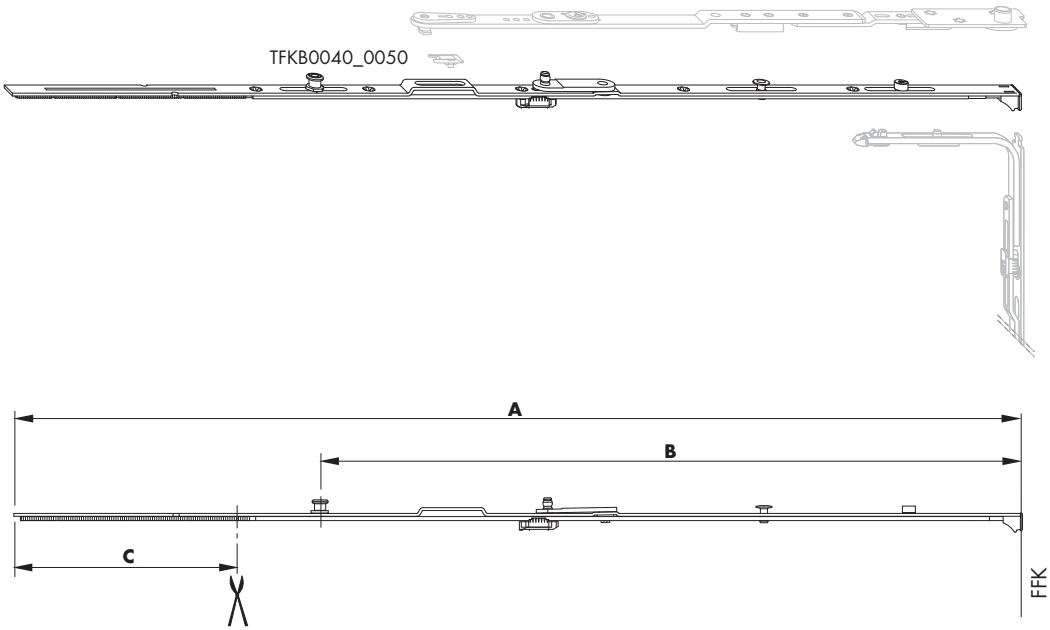


## Sales information

| Description | Part number | Surface | Colour | Box quantity |
|---|---|---|---|---|
| stay sash part SE AF sz 1 | TSSV1000-10001_ | Titan Silver | without | 1 pc |
| | TSSV1000-10004_ | Titan Silver | without | 25 pcs |
| stay sash part SE AF sz2+3 1RS | TSSV1010-10001_ | Titan Silver | without | 1 pc |
| | TSSV1010-10004_ | Titan Silver | without | 25 pcs |
| stay sash part SE AF sz 4 1RS | TSSV1020-10001_ | Titan Silver | without | 1 pc |
| | TSSV1020-10004_ | Titan Silver | without | 25 pcs |
| stay sash part SE AF sz 5 1RS | TSSV1030-10001_ | Titan Silver | without | 1 pc |
| | TSSV1030-10004_ | Titan Silver | without | 25 pcs |

## Technical information

| Part number | Description | FFB | Dimensions (mm) A | Airgap | Groove axis | sash weight | | |
|---|---|---|---|---|---|---|---|---|
| TSSV1041-... | stay sash part SE DF rh. | 340 - 1650 | 74 | 12 | 9 | 130 kg | 1 | 5 |
| TSSV1042-... | stay sash part SE DF lh. | 340 - 1650 | 74 | 12 | 9 | 130 kg | 1 | 5 |



- Use of a friction stay required
- **Please observe:**
  Guidelines/notes on the product and on liability (VHBH directive as well as the other applicable documents listed - directive can be downloaded at www.beschlagindustrie.de/ggsb/richtlinien.asp )
  Specifications from the profile manufacturers/system owners (PVC, light metal) or DIN 68 121 “Wooden profiles for windows and portal doors”

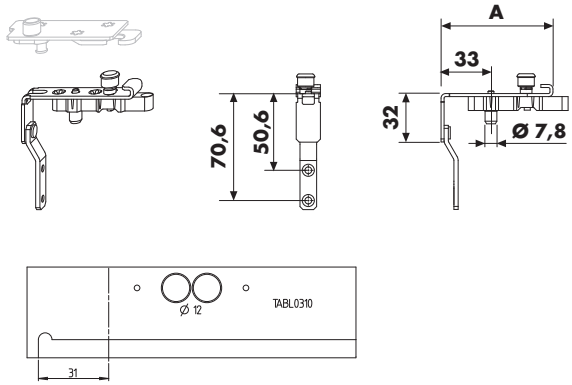


## Sales information

| Description | Part number | Surface | Colour | Box quantity |
|---|---|---|---|---|
| stay sash part SE DF rh. | TSSV1041-10001_ | Titan Silver | without | 1 pc |
| | TSSV1041-10004_ | Titan Silver | without | 25 pcs |
| stay sash part SE DF lh. | TSSV1042-10001_ | Titan Silver | without | 1 pc |
| | TSSV1042-10004_ | Titan Silver | without | 25 pcs |

## Technical information

| Part number | Description | FFB | Dimensions (mm) | | sash weight | |
|---|---|---|---|---|---|---|
| | | | A | B | | |
| TSAV1001-... | stay arm SE sz 1 .. rh. | 360 - 650 | 257 | 80 | 130 kg | 3 |
| TSAV1002-... | stay arm SE sz 1 .. lh. | 360 - 650 | 257 | 80 | 130 kg | 3 |
| TSAV1011-... | stay arm SE sz 2+3 .. rh. | 651 - 850 | 367 | 140 | 130 kg | 3 |
| TSAV1012-... | stay arm SE sz 2+3 .. lh. | 651 - 850 | 367 | 140 | 130 kg | 3 |
| TSAV1021-... | stay arm SE sz 4 .. rh. | 851 - 1050 | 398 | 140 | 130 kg | 3 |
| TSAV1022-... | stay arm SE sz 4 .. lh. | 851 - 1050 | 398 | 140 | 130 kg | 3 |
| TSAV1031-... | stay arm SE sz 5 .. rh. | 1051 - 1250 | 530 | 140 | 130 kg | 3 |
| TSAV1032-... | stay arm SE sz 5 .. lh. | 1051 - 1250 | 530 | 140 | 130 kg | 3 |



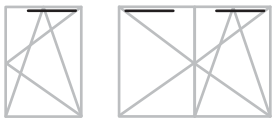

- Dimension B = opening width
- Notice for hinge system axxent SE:
  The tilt restrictor must be used on all units with weights > 100 kg.
- Fixing screws for the stay arm must be selected and fixed, so that the screw heads do not protrude beyond the respective base plate.

- **Please observe:**
  Guidelines/notes on the product and on liability (VHBH directive as well as the other applicable documents listed - directive can be downloaded at www.beschlagindustrie.de/ggsb/richtlinien.asp )
  Specifications from the profile manufacturers/system owners (PVC, light metal) or DIN 68 121 “Wooden profiles for windows and portal doors”

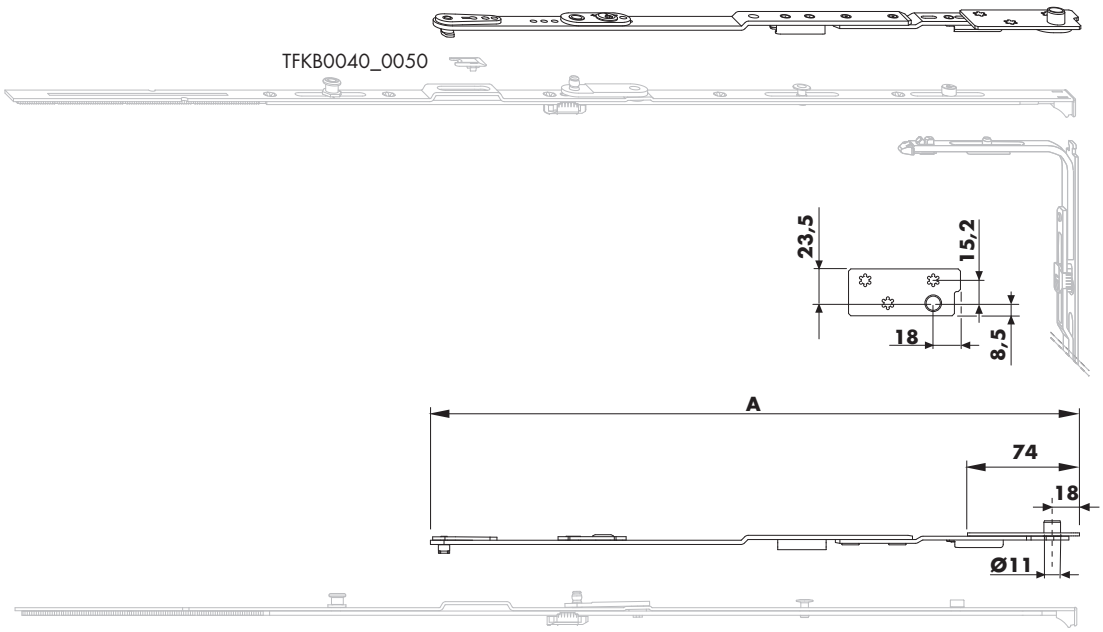

## Sales information

| Description | Part number | Surface | Colour | Box quantity |
|---|---|---|---|---|
| stay arm SE sz 1 .. rh. | TSAV1001-10001_ | Titan Silver | without | 1 pc |
| | TSAV1001-10004_ | Titan Silver | without | 25 pcs |
| stay arm SE sz 1 .. lh. | TSAV1002-10001_ | Titan Silver | without | 1 pc |
| | TSAV1002-10004_ | Titan Silver | without | 25 pcs |
| stay arm SE sz 2+3 .. rh. | TSAV1011-10001_ | Titan Silver | without | 1 pc |
| | TSAV1011-10004_ | Titan Silver | without | 25 pcs |
| stay arm SE sz 2+3 .. lh. | TSAV1012-10001_ | Titan Silver | without | 1 pc |
| | TSAV1012-10004_ | Titan Silver | without | 25 pcs |
| stay arm SE sz 4 .. rh. | TSAV1021-10001_ | Titan Silver | without | 1 pc |
| | TSAV1021-10004_ | Titan Silver | without | 25 pcs |
| stay arm SE sz 4 .. lh. | TSAV1022-10001_ | Titan Silver | without | 1 pc |
| | TSAV1022-10004_ | Titan Silver | without | 25 pcs |
| stay arm SE sz 5 .. rh. | TSAV1031-10001_ | Titan Silver | without | 1 pc |
| | TSAV1031-10004_ | Titan Silver | without | 25 pcs |
| stay arm SE sz 5 .. lh. | TSAV1032-10001_ | Titan Silver | without | 1 pc |
| | TSAV1032-10004_ | Titan Silver | without | 25 pcs |

## Drill holes and routings

- For use with stay arm SE TSAV

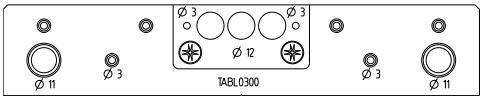


## Technical details

- profile section SE

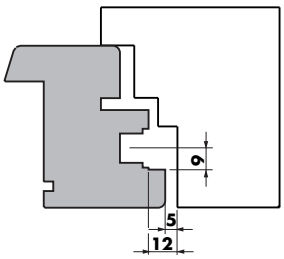

## Technical information

| Part number | Description | FFB | Dimensions (mm) | | sash weight | |
|---|---|---|---|---|---|---|
| | | | A | B | | |
| TSAV1041-... | stay arm SE TBT sz 1 .. rh. | 360 - 650 | 257 | 80 | 130 kg | 3 |
| TSAV1042-... | stay arm SE TBT sz 1 .. lh. | 360 - 650 | 257 | 80 | 130 kg | 3 |
| TSAV1051-... | stay arm SE TBT sz 2+3 .. rh. | 651 - 850 | 367 | 140 | 130 kg | 3 |
| TSAV1052-... | stay arm SE TBT sz 2+3 .. lh. | 651 - 850 | 367 | 140 | 130 kg | 3 |
| TSAV1061-... | stay arm SE TBT sz 4 .. rh. | 851 - 1050 | 398 | 140 | 130 kg | 3 |
| TSAV1062-... | stay arm SE TBT sz 4 .. lh. | 851 - 1050 | 398 | 140 | 130 kg | 3 |
| TSAV1071-... | stay arm SE TBT sz 5 .. rh. | 1051 - 1250 | 530 | 140 | 130 kg | 3 |
| TSAV1072-... | stay arm SE TBT sz 5 .. lh. | 1051 - 1250 | 530 | 140 | 130 kg | 3 |



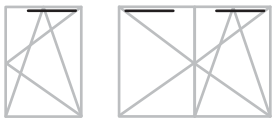

- Dimension B = opening width
- Sequence of operation: TILT before TURN
- Notice for hinge system axxent SE:
  The tilt restrictor must be used on all units with weights > 100 kg.
- Fixing screws for the stay arm must be selected and fixed, so that the screw heads do not protrude beyond the respective base plate.
- **Please observe:**
  Guidelines/notes on the product and on liability (VHBH directive as well as the other applicable documents listed - directive can be downloaded at www.beschlagindustrie.de/ggsb/richtlinien.asp )
  Specifications from the profile manufacturers/system owners (PVC, light metal) or DIN 68 121 “Wooden profiles for windows and portal doors”

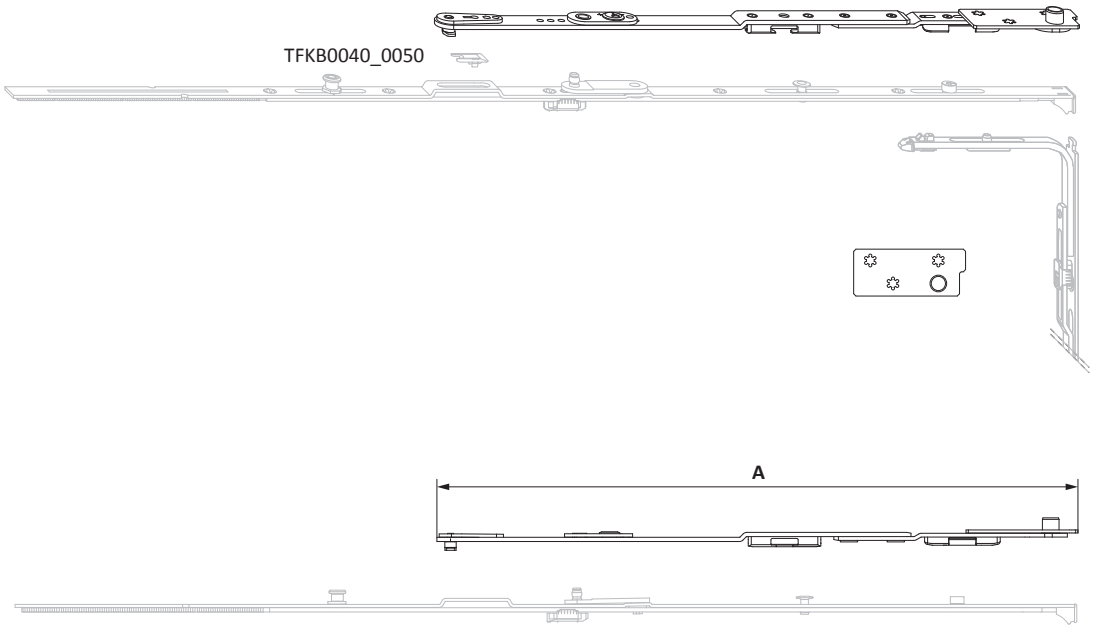

## Sales information

| Description | Part number | Surface | Colour | Box quantity |
|---|---|---|---|---|
| stay arm SE TBT sz 1 .. rh. | TSAV1041-10001_ | Titan Silver | without | 1 pc |
| | TSAV1041-10004_ | Titan Silver | without | 25 pcs |
| stay arm SE TBT sz 1 .. lh. | TSAV1042-10001_ | Titan Silver | without | 1 pc |
| | TSAV1042-10004_ | Titan Silver | without | 25 pcs |
| stay arm SE TBT sz 2+3 .. rh. | TSAV1051-10001_ | Titan Silver | without | 1 pc |
| | TSAV1051-10004_ | Titan Silver | without | 25 pcs |
| stay arm SE TBT sz 2+3 .. lh. | TSAV1052-10001_ | Titan Silver | without | 1 pc |
| | TSAV1052-10004_ | Titan Silver | without | 25 pcs |
| stay arm SE TBT sz 4 .. rh. | TSAV1061-10001_ | Titan Silver | without | 1 pc |
| | TSAV1061-10004_ | Titan Silver | without | 25 pcs |
| stay arm SE TBT sz 4 .. lh. | TSAV1062-10001_ | Titan Silver | without | 1 pc |
| | TSAV1062-10004_ | Titan Silver | without | 25 pcs |
| stay arm SE TBT sz 5 .. rh. | TSAV1071-10001_ | Titan Silver | without | 1 pc |
| | TSAV1071-10004_ | Titan Silver | without | 25 pcs |
| stay arm SE TBT sz 5 .. lh. | TSAV1072-10001_ | Titan Silver | without | 1 pc |
| | TSAV1072-10004_ | Titan Silver | without | 25 pcs |

## Drill holes and routings

- For use with stay arm SE TSAV

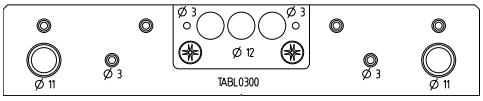


## Technical details

- profile section SE

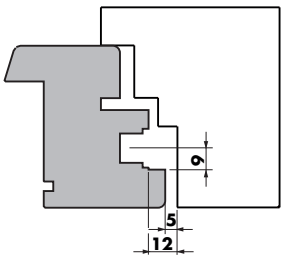

## Technical information

| Part number | Description | FFB | Dimensions (mm) A | sash weight | |
|---|---|---|---|---|---|
| TSAV1081-... | stay arm SE DF .. rh. | 340 - 1650 | 74 | 130 kg | 3 |
| TSAV1082-... | stay arm SE DF .. lh. | 340 - 1650 | 74 | 130 kg | 3 |



- Use of a friction stay required
- **Please observe:**
  Guidelines/notes on the product and on liability (VHBH directive as well as the other applicable documents listed - directive can be downloaded at www.beschlagindustrie.de/ggsb/richtlinien.asp )
  Specifications from the profile manufacturers/system owners (PVC, light metal) or DIN 68 121 “Wooden profiles for windows and portal doors”

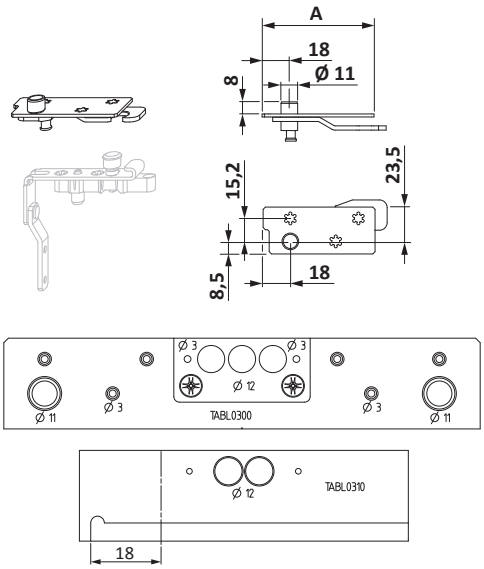


## Sales information

| Description | Part number | Surface | Colour | Box quantity |
|---|---|---|---|---|
| stay arm SE DF .. rh. | TSAV1081-10001_ | Titan Silver | without | 1 pc |
| | TSAV1081-10004_ | Titan Silver | without | 25 pcs |
| stay arm SE DF .. lh. | TSAV1082-10001_ | Titan Silver | without | 1 pc |
| | TSAV1082-10004_ | Titan Silver | without | 25 pcs |

## Technical information

| Part number | Description |
|---|---|
| 707845 | cover rail .. |

- For additional screwing connection of the stay without sash parts of hinge side



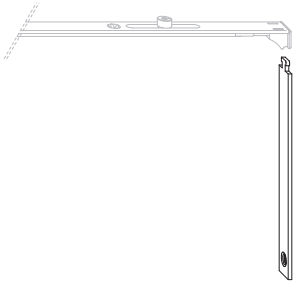

## Sales information

| Description | Part number | Surface | Colour | Box quantity |
|---|---|---|---|---|
| cover rail .. | 707845 | Titan Silver | without | 1 pc |
| | 286029 | Titan Silver | without | 250 pcs |

## Technical information

| Part number | Description | |
|---|---|---|
| TRZV1020-... | striker BS/Z SE | 2 |

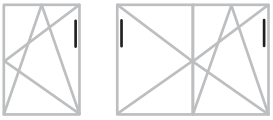



- Compression can be regulated by turning the insert by 180° and/or removing the insert completely

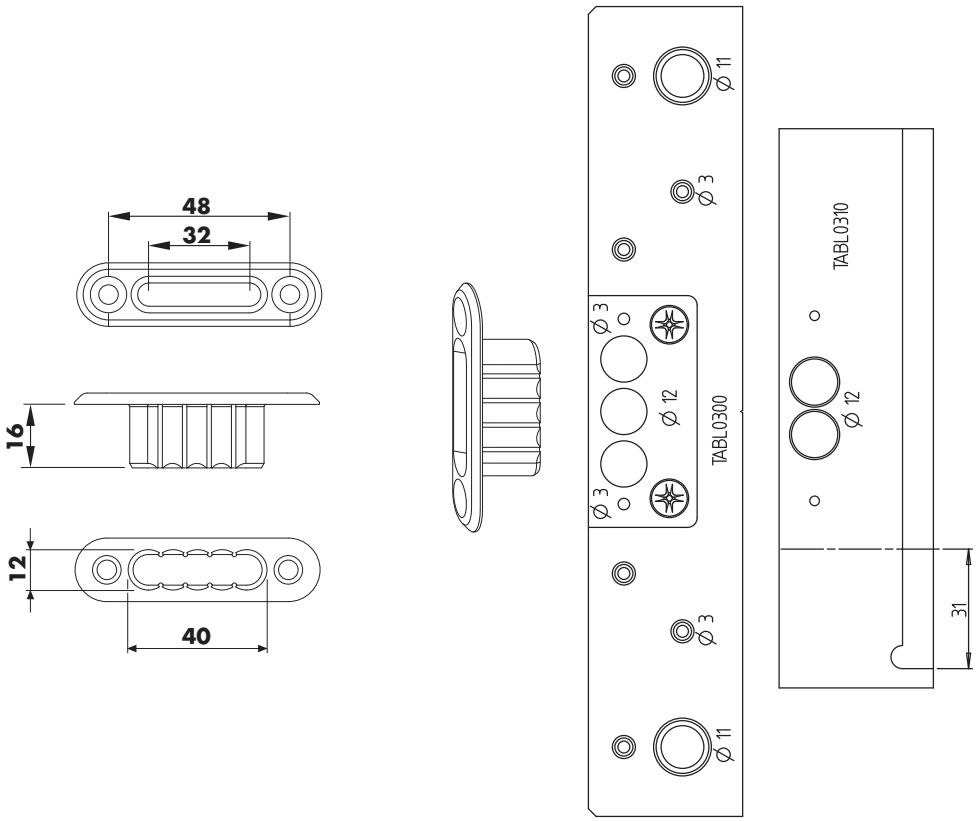


## Sales information

| Description | Part number | Surface | Colour | Box quantity |
|---|---|---|---|---|
| striker BS/Z SE | TRZV1020-10001_ | Titan Silver | without | 1 pc |
| | TRZV1020-10005_ | Titan Silver | without | 50 pcs |

## Technical information

| Part number | Description |
|---|---|
| TFKB0040-... | tilt restrictor V-V sz 2-4 .. |
| TFKB0050-... | tilt restrictor V-V sz 5 .. |

- When using the tilt restrictor V-V, a separate mishandling device is required!
- Restricts the scissor stay's projecting depth to 100 mm
- Only applicable on single-sashed elements and in secondary sashes main sash
- Notice for hinge system axxent SE:
  The tilt restrictor must be used on all units with weights > 100 kg.



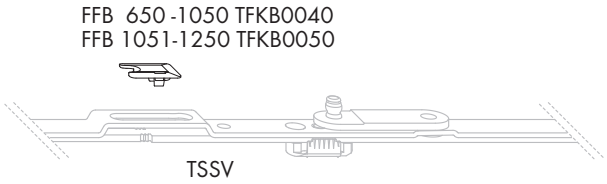


## Sales information

| Description | Part number | Surface | Colour | Box quantity |
|---|---|---|---|---|
| tilt restrictor V-V sz 2-4 .. | TFKB0040-02301_ | neutral | RAL9005 | 1 pc |
| | TFKB0040-02306_ | neutral | RAL9005 | 100 pcs |
| tilt restrictor V-V sz 5 .. | TFKB0050-02301_ | neutral | RAL9005 | 1 pc |
| | TFKB0050-02306_ | neutral | RAL9005 | 100 pcs |

## Technical information

| Part number | Description | |
|---|---|---|
| TFMV0070-... | sash part MV SE .. | 2 |

- Packer refer to PDB line item FRUP02



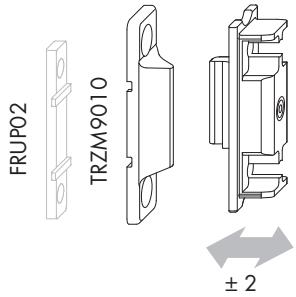


## Sales information

| Description | Part number | Surface | Colour | Box quantity |
|---|---|---|---|---|
| sash part MV SE .. | TFMV0070-10001_ | Titan Silver | without | 1 pc |
| | TFMV0070-10005_ | Titan Silver | without | 50 pcs |

| Description | Material | Page |
|---|---|---|
| corner drive AF VSO | TEUL4010 | 2.1 - 3 |
| corner drive AF VSO A0055 | TEUL4070 | 2.1 - 4 |
| corn.drive VSO FBS 13 | TEUL4141, TEUL4142, TEUL4241, TEUL4242, TEUL4331, TEUL4332 | 2.1 - 5 |
| corner drive AF VSO FBS 13 | TEUL4251, TEUL4252, TEUL4341, TEUL4342, TEUL4301, TEUL4302 | 2.1 - 6 |
| corner drive AF VSO narrow | TEUL4020 | 2.1 - 7 |
| corner drive AF VSO/K+ DF | TEUL4110 | 2.1 - 8 |
| corner drive AF VSO/K+ DF 2RS | TEUL4290 | 2.1 - 9 |
| corner drive AF VSO/K+ DS | TEUL4120 | 2.1 - 10 |
| corner drive AF VSO DS | TEUL4060 | 2.1 - 11 |
| corner drive AF VSO WK 2 | TEUL4080 | 2.1 - 12 |
| corner drive AF VSO SF | TEUL4030 | 2.1 - 13 |
| corner drive AF VSO SF 2RS | TEUL4230 | 2.1 - 14 |
| corner drive AF VSO SF narrow | TEUL4050 | 2.1 - 15 |
| corner drive AF VSO SP | TEUL4040 | 2.1 - 16 |
| corner drive AF VSO narrow RSA | TEUL4130, TEUL4150 | 2.1 - 17 |
| corner drive RB 1RS sec.sh/SB | FEUL0420 | 2.1 - 18 |
| corner drive AF VSO UE | TEUL4100 | 2.1 - 19 |
| corner drive AF VSO/MSP | TEUL4220, FMMS0010, FMMS0040, FMMS0050, FMMS0060, FMMS0070, FMMS0080, FMMS0090, FMMS0100, FMMS0020 | 2.1 - 20 |
| corner drive AF VSO FPS | TEUL4160 | 2.1 - 22 |
| corner drive AF VSU/K+ FH | TEUL5010 | 2.1 - 23 |
| corner drive AF VSU/K+ FG | TEUL5080 | 2.1 - 24 |
| corn.drive AF VSU/K+ FH A0055 | TEUL5020 | 2.1 - 25 |
| corner drive AF VSU/K+ A0055 | TEUL5250 | 2.1 - 26 |
| corner drive AF VSU/K+ FH nar. | TEUL5090 | 2.1 - 27 |
| corner drive AF VSU/K+ WK 2 FH | TEUL5110 | 2.1 - 28 |
| corner drive AF VSU/K+ DS | TEUL1230 | 2.1 - 29 |
| corn.drive VSU/A narrow FH RB | TEUL5130 | 2.1 - 30 |

| Description | Material | Page |
|---|---|---|
| corner drive AF/PSK | PEUJ0010, PEUJ0020 | 2.1 - 31 |
| corn.drive AF VSU/K 56+ 1S 1RS | TEUL5030 | 2.1 - 32 |
| corn.drive AF VSU/K 56+ 1S 2RS | TEUL5040 | 2.1 - 33 |
| corner drive AF VSU/K 56+ FH | TEUL5190 | 2.1 - 34 |
| corn.drive VSU/K 56+FH FBS | TEUL5061, TEUL5062, TEUL5151, TEUL5152 | 2.1 - 35 |
| corn.drive VSU/K 56+FH FBS | TEUL5071, TEUL5072, TEUL5161, TEUL5162 | 2.1 - 36 |
| corn.drive VSU/K 56+ SB 1S 2RS | TEUL5120 | 2.1 - 37 |
| corn.drive VSU/K 56+ nar.1S2RS | TEUL5100 | 2.1 - 38 |
| corn.drive VSU/K 56+FH/FBS | TEUL5050 | 2.1 - 39 |
| corn.drive AF VSU/K+ DS A0273 | TEUL5210 | 2.1 - 40 |
| corn.drive AF SE VSU/K+FH/FBS | TEUL5140 | 2.1 - 41 |
| corn.drive AF SE VSU/K 56+ | TEUL5170 | 2.1 - 42 |
| corner drive BS/K3+ 1RS | TEUL2410, TEUL2420 | 2.1 - 43 |
| corner drive BS/K3+ 2RS | TEUL2380, TEUL2390 | 2.1 - 45 |
| corner drive BSO/K3+ | TEUL2400 | 2.1 - 47 |
| corner drive BSO/A3 | TEUL2300 | 2.1 - 48 |
| corner drive BSU timber | TEUL7031, TEUL7032, TEUL7041, TEUL7042; TEUL7011, TEUL7012, TEUL7021, TEUL7022, TKFE7011, TKFE7012 | 2.1 - 49 |
| corner drive BSU | TEUL7051, TEUL7052, TEUL7061, TEUL7062, TEUL7071, TEUL7072, TEUL7081, TEUL7082, TKFE7011, TKFE7012 | 2.1 - 51 |
| corner drive BSU | TEUL3200 | 2.1 - 53 |

## Technical information

| Part number | Description | Dimensions (mm) | | | | |
|---|---|---|---|---|---|---|
| | | A | B | C | | |
| TEUL4010-... | corn.drive VSO 1RS | 140 | 140 | 63 | 1 | 4 |

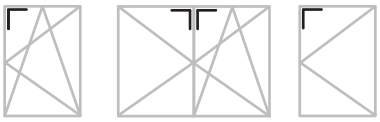

- The range of application conforms to the connecting components



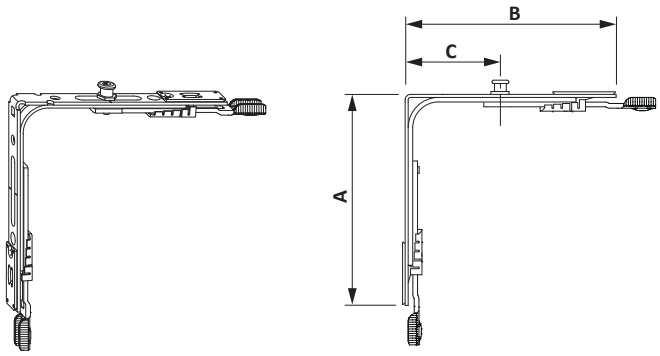


## Sales information

| Description | Part number | Surface | Colour | Box quantity |
|---|---|---|---|---|
| corn.drive VSO 1RS | TEUL4010-10001_ | Titan Silver | without | 1 pc |
| | TEUL4010-10005_ | Titan Silver | without | 50 pcs |
| | TEUL4010-10030_ | Titan Silver | without | 1200 pcs |

## Technical information

| Part number | Description | Dimensions (mm) | | | | |
|---|---|---|---|---|---|---|
| | | A | B | C | | |
| TEUL4070-... | corn.drive VSO 2RS A0055 | 140 | 140 | 63 | 2 | 4 |

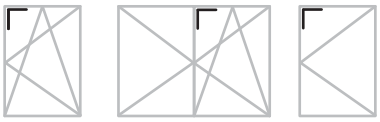

- For RC2
- The range of application conforms to the connecting components



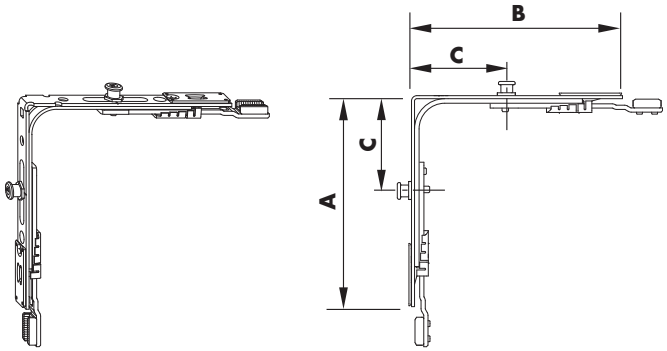


## Sales information

| Description | Part number | Surface | Colour | Box quantity |
|---|---|---|---|---|
| corn.drive VSO 2RS A0055 | TEUL4070-10001_ | Titan Silver | without | 1 pc |
| | TEUL4070-10005_ | Titan Silver | without | 50 pcs |
| | TEUL4070-10030_ | Titan Silver | without | 1200 pcs |

## Technical information

| Part number | Description | Dimensions (mm) | | | Groove axis | | |
|---|---|---|---|---|---|---|---|
| | | A | B | C | | | |
| TEUL4141-... | corn.drive AF VSO FBS 1RS PVC 13 rh. | 140 | 140 | 63 | 13 | 1 | 4 |
| TEUL4142-... | corn.drive AF VSO FBS 1RS PVC 13 lh. | 140 | 140 | 63 | 13 | 1 | 4 |
| TEUL4241-... | corn.drive AF VSO FBS 1S 13 rh. | 140 | 140 | 63 | 13 | 1 | 4 |
| TEUL4242-... | corn.drive AF VSO FBS 1S 13 lh. | 140 | 140 | 63 | 13 | 1 | 4 |
| TEUL4331-... | corn.drive AF VSO FBS 1RS H 13 rh. | 140 | 140 | 63 | 13 | 1 | 4 |
| TEUL4332-... | corn.drive AF VSO FBS 1RS H 13 lh. | 140 | 140 | 63 | 13 | 1 | 4 |



- Also applicable for TBT
- With preassembled mishandling device

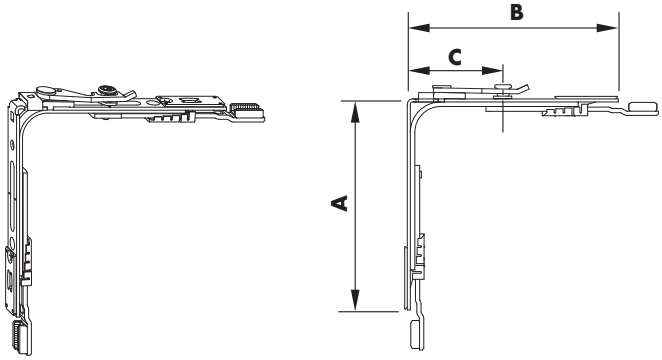


## Sales information

| Description | Part number | Surface | Colour | Box quantity |
|---|---|---|---|---|
| corn.drive AF VSO FBS 1RS PVC 13 rh. | TEUL4141-10001_ | Titan Silver | without | 1 pc |
| | TEUL4141-10005_ | Titan Silver | without | 50 pcs |
| | TEUL4141-10029_ | Titan Silver | without | 1000 pcs |
| corn.drive AF VSO FBS 1RS PVC 13 lh. | TEUL4142-10001_ | Titan Silver | without | 1 pc |
| | TEUL4142-10005_ | Titan Silver | without | 50 pcs |
| | TEUL4142-10029_ | Titan Silver | without | 1000 pcs |
| corn.drive AF VSO FBS 1S 13 rh. | TEUL4241-10001_ | Titan Silver | without | 1 pc |
| | TEUL4241-10005_ | Titan Silver | without | 50 pcs |
| corn.drive AF VSO FBS 1S 13 lh. | TEUL4242-10001_ | Titan Silver | without | 1 pc |
| | TEUL4242-10005_ | Titan Silver | without | 50 pcs |
| corn.drive AF VSO FBS 1RS H 13 rh. | TEUL4331-10001_ | Titan Silver | without | 1 pc |
| | TEUL4331-10005_ | Titan Silver | without | 50 pcs |
| corn.drive AF VSO FBS 1RS H 13 lh. | TEUL4332-10001_ | Titan Silver | without | 1 pc |
| | TEUL4332-10005_ | Titan Silver | without | 50 pcs |

## Technical information

| Part number | Description | Dimensions (mm) | | | Groove axis | | |
|---|---|---|---|---|---|---|---|
| | | A | B | C | | | |
| TEUL4251-... | corn.drive AF VSO FBS 2RS PVC 13 rh. | 140 | 140 | 63 | 13 | 2 | 4 |
| TEUL4252-... | corn.drive AF VSO FBS 2RS PVC 13 lh. | 140 | 140 | 63 | 13 | 2 | 4 |
| TEUL4341-... | corn.drive AF VSO FBS 2RS H 13 rh. | 140 | 140 | 63 | 13 | 2 | 4 |
| TEUL4342-... | corn.drive AF VSO FBS 2RS H 13 lh. | 140 | 140 | 63 | 13 | 2 | 4 |
| TEUL4301-... | corn.drive AF VSO FBS 1S 1RS 13 rh. | 140 | 140 | 63 | 13 | 2 | 4 |
| TEUL4302-... | corn.drive AF VSO FBS 1S 1RS 13 lh. | 140 | 140 | 63 | 13 | 2 | 4 |



- For RC2
- Also applicable for TBT
- With preassembled mishandling device
- The range of application conforms to the connecting components

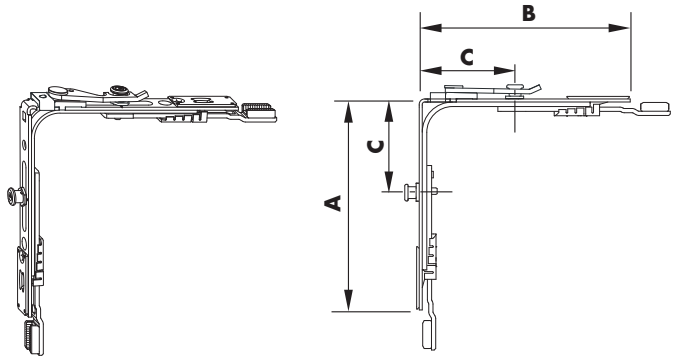


## Sales information

| Description | Part number | Surface | Colour | Box quantity |
|---|---|---|---|---|
| corn.drive AF VSO FBS 2RS PVC 13 rh. | TEUL4251-10001_ | Titan Silver | without | 1 pc |
| | TEUL4251-10005_ | Titan Silver | without | 50 pcs |
| corn.drive AF VSO FBS 2RS PVC 13 lh. | TEUL4252-10001_ | Titan Silver | without | 1 pc |
| | TEUL4252-10005_ | Titan Silver | without | 50 pcs |
| corn.drive AF VSO FBS 2RS H 13 rh. | TEUL4341-10001_ | Titan Silver | without | 1 pc |
| | TEUL4341-10005_ | Titan Silver | without | 50 pcs |
| corn.drive AF VSO FBS 2RS H 13 lh. | TEUL4342-10001_ | Titan Silver | without | 1 pc |
| | TEUL4342-10005_ | Titan Silver | without | 50 pcs |
| corn.drive AF VSO FBS 1S 1RS 13 rh. | TEUL4301-10001_ | Titan Silver | without | 1 pc |
| | TEUL4301-10005_ | Titan Silver | without | 50 pcs |
| corn.drive AF VSO FBS 1S 1RS 13 lh. | TEUL4302-10001_ | Titan Silver | without | 1 pc |
| | TEUL4302-10005_ | Titan Silver | without | 50 pcs |

## Technical information

| Part number | Description | Dimensions (mm) | | | | |
|---|---|---|---|---|---|---|
| | | A | B | C | | |
| TEUL4020-... | corn.drive AF VSO narrow 1RS | 38 | 140 | 63 | 1 | 3 |

- The range of application conforms to the connecting components
- * Note: screw-fix additionally with 4.1x… screws!



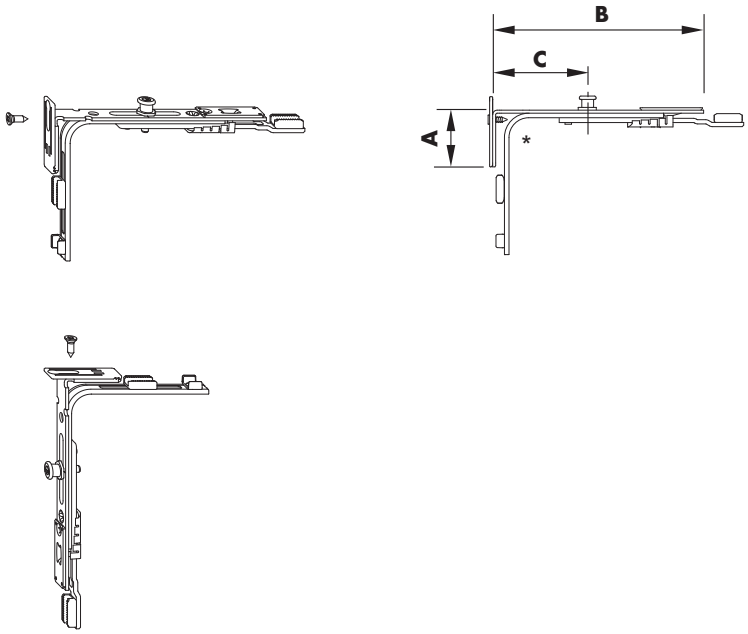


## Sales information

| Description | Part number | Surface | Colour | Box quantity |
|---|---|---|---|---|
| corn.drive AF VSO narrow 1RS | TEUL4020-10001_ | Titan Silver | without | 1 pc |
| | TEUL4020-10005_ | Titan Silver | without | 50 pcs |

## Technical information

| Part number | Description | Dimensions (mm) | | | | |
|---|---|---|---|---|---|---|
| | | A | B | C | | |
| TEUL4110-... | corn.drive VSO/K+ DF 1RS | 140 | 210 | 63 | 1 | 5 |

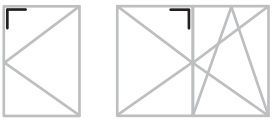

- Coupling location to slide underneath
- Use in slave sashes with opposing fitting groove
- For basic security
- The range of application conforms to the connecting components



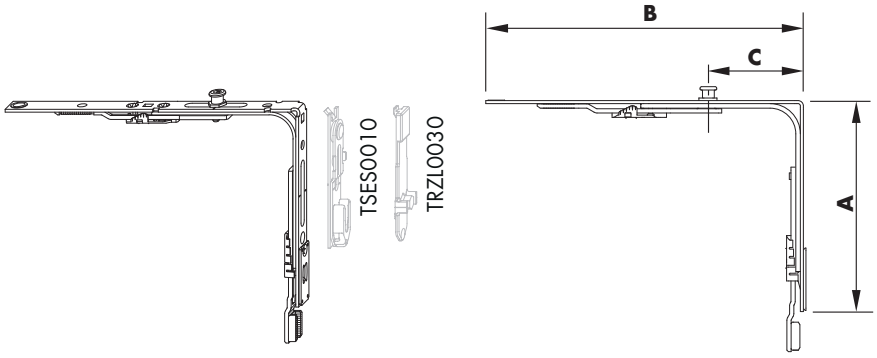


## Sales information

| Description | Part number | Surface | Colour | Box quantity |
|---|---|---|---|---|
| corn.drive VSO/K+ DF 1RS | TEUL4110-10001_ | Titan Silver | without | 1 pc |
| | TEUL4110-10005_ | Titan Silver | without | 50 pcs |
| | TEUL4110-10029_ | Titan Silver | without | 1000 pcs |

## Technical information

| Part number | Description | Dimensions (mm) | | | | |
|---|---|---|---|---|---|---|
| | | A | B | C | | |
| TEUL4290-... | corn.drive VSO/K+ DF 2RS | 140 | 210 | 63 | 2 | 5 |

- Coupling location to slide underneath
- The range of application conforms to the connecting components



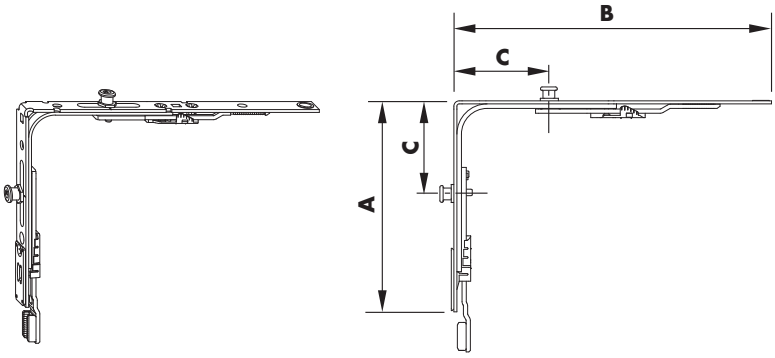


## Sales information

| Description | Part number | Surface | Colour | Box quantity |
|---|---|---|---|---|
| corn.drive VSO/K+ DF 2RS | TEUL4290-10001_ | Titan Silver | without | 1 pc |
| | TEUL4290-10005_ | Titan Silver | without | 50 pcs |

## Technical information

| Part number | Description | Dimensions (mm) | | | | |
|---|---|---|---|---|---|---|
| | | A | B | C | | |
| TEUL4120-... | corn.drive VSO/K+ DS 1RS | 140 | 210 | 63 | 1 | 5 |

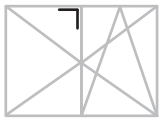

- Coupling location to slide underneath
- Can be used in the secondary sash with groove ../8x4
- For basic security
- The range of application conforms to the connecting components



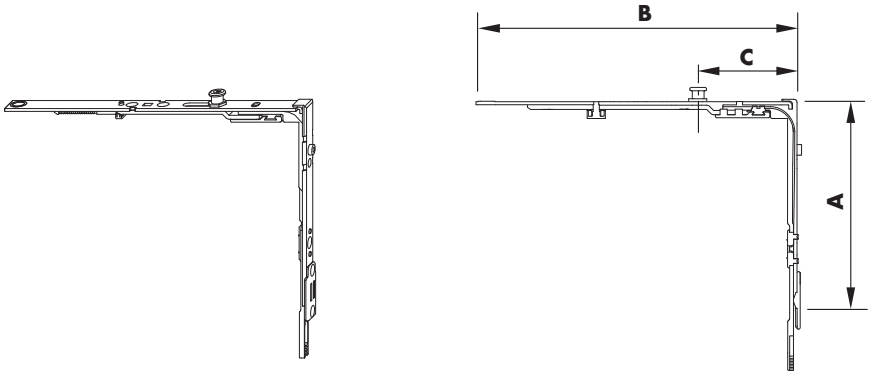


## Sales information

| Description | Part number | Surface | Colour | Box quantity |
|---|---|---|---|---|
| corn.drive VSO/K+ DS 1RS | TEUL4120-10001_ | Titan Silver | without | 1 pc |
| | TEUL4120-10005_ | Titan Silver | without | 50 pcs |

## Technical information

| Part number | Description | Dimensions (mm) | | | | |
|---|---|---|---|---|---|---|
| | | A | B | C | | |
| TEUL4060-... | corn.drive VSO DS 1RS | 140 | 140 | 63 | 1 | 4 |

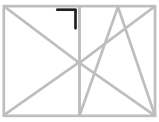

- Can be used in the secondary sash with groove ../8x4
- For RC1
- The range of application conforms to the connecting components



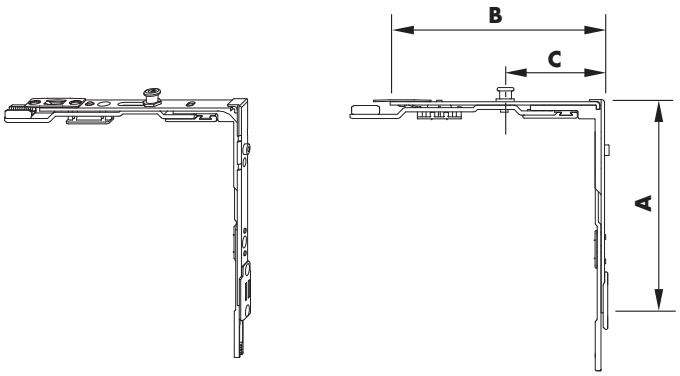


## Sales information

| Description | Part number | Surface | Colour | Box quantity |
|---|---|---|---|---|
| corn.drive VSO DS 1RS | TEUL4060-10001_ | Titan Silver | without | 1 pc |
| | TEUL4060-10004_ | Titan Silver | without | 25 pcs |

## Technical information

| Part number | Description | Dimensions (mm) | | | | |
|---|---|---|---|---|---|---|
| | | A | B | C | | |
| TEUL4080-... | corn.drive AF VSO WK2 SB 1RS | 140 | 140 | 63 | 1 | 4 |

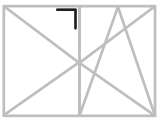

- Use in slave sashes with opposing fitting groove
- For RC2
- The range of application conforms to the connecting components



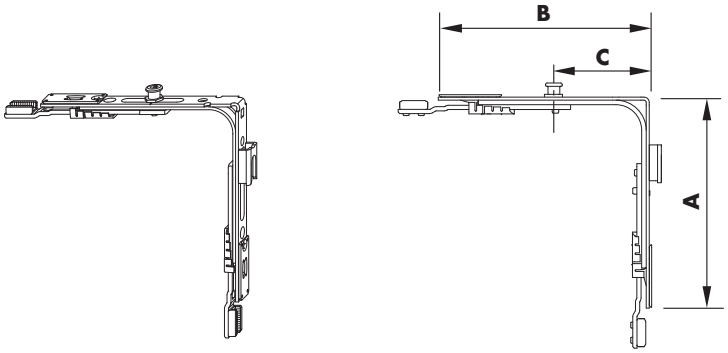


## Sales information

| Description | Part number | Surface | Colour | Box quantity |
|---|---|---|---|---|
| corn.drive AF VSO WK2 SB 1RS | TEUL4080-10001_ | Titan Silver | without | 1 pc |
| | TEUL4080-10005_ | Titan Silver | without | 50 pcs |

## Technical information

| Part number | Description | Dimensions (mm) | | | | |
|---|---|---|---|---|---|---|
| | | A | B | C | | |
| TEUL4030-... | corn.drive AF VSO SF 1RS | 140 | 140 | 63 | 1 | 4 |

- The range of application conforms to the connecting components
- Applicable on basic security and RC1
- after bending, fix screws to the corner angle



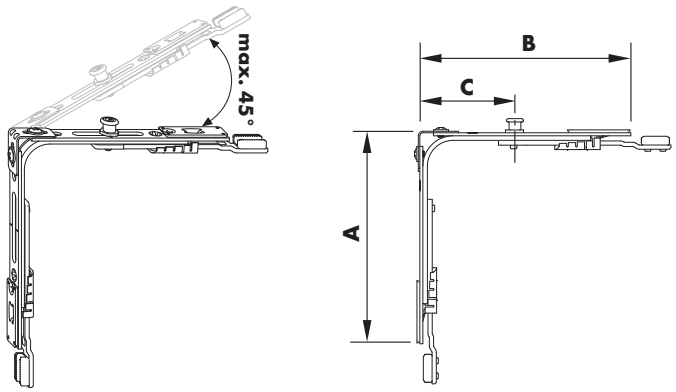


## Sales information

| Description | Part number | Surface | Colour | Box quantity |
|---|---|---|---|---|
| corn.drive AF VSO SF 1RS | TEUL4030-10001_ | Titan Silver | without | 1 pc |
| | TEUL4030-10005_ | Titan Silver | without | 50 pcs |

## Technical information

| Part number | Description | Dimensions (mm) | | | | |
|---|---|---|---|---|---|---|
| | | A | B | C | | |
| TEUL4230-... | corn.drive AF VSO SF 2RS | 140 | 140 | 63 | 2 | 4 |



- For RC2
- The range of application conforms to the connecting components
- after bending, fix screws to the corner angle

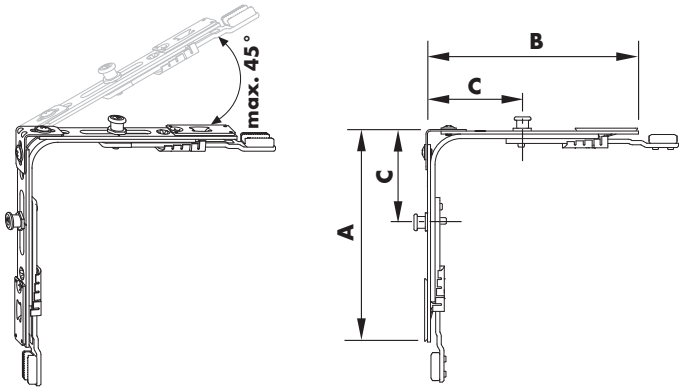


## Sales information

| Description | Part number | Surface | Colour | Box quantity |
|---|---|---|---|---|
| corn.drive AF VSO SF 2RS | TEUL4230-10001_ | Titan Silver | without | 1 pc |
| | TEUL4230-10005_ | Titan Silver | without | 50 pcs |

## Technical information

| Part number | Description | Dimensions (mm) | | | |
|---|---|---|---|---|---|
| | | A | B | | |
| TEUL4050-... | corn.drive AF VSO SF nar. 1RS | 140 | 63 | 1 | 3 |

- The range of application conforms to the connecting components
- Applicable on basic security and RC1
- * Note: screw-fix additionally with 4.1x… screws!
- **** Additionally required:**
  bag accessories SF/SB see components list for accessories



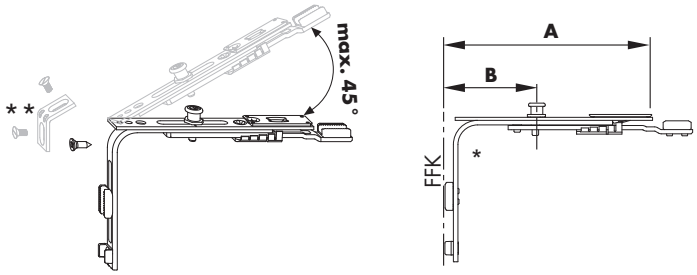


## Sales information

| Description | Part number | Surface | Colour | Box quantity |
|---|---|---|---|---|
| corn.drive AF VSO SF nar. 1RS | TEUL4050-10001_ | Titan Silver | without | 1 pc |
| | TEUL4050-10005_ | Titan Silver | without | 50 pcs |

## Technical information

| Part number | Description | Dimensions (mm) | | | | | |
|---|---|---|---|---|---|---|---|
| | | A | B | C | D | | |
| TEUL4040-... | corn.drive AF VSO SP 1RS | 140 | 140 | 63 | 62 | 2 | 4 |



- Enables the sash to be tilted in an energy saving night-vent position
- Required part on master sash for the use of energy saving stay ZSES
- Suitable for night vent striker plate DT, refer to PDB line item ARZC
- Applicable on basic security and RC1
- The range of application conforms to the connecting components

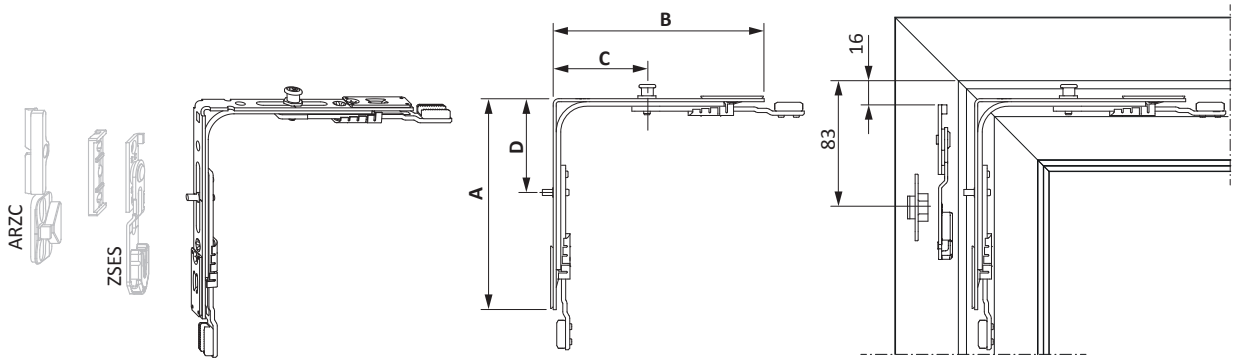


## Sales information

| Description | Part number | Surface | Colour | Box quantity |
|---|---|---|---|---|
| corn.drive AF VSO SP 1RS | TEUL4040-10001_ | Titan Silver | without | 1 pc |
| | TEUL4040-10005_ | Titan Silver | without | 50 pcs |
| | TEUL4040-10030_ | Titan Silver | without | 1200 pcs |

## Technical information

| Part number | Description | Dimensions (mm) | | | | |
|---|---|---|---|---|---|---|
| | | A | B | C | | |
| TEUL4130-... | corn.drive VSO narrow RSA 14mm | 38 | 140 | 14 | 1 | 3 |
| TEUL4150-... | corn.drive VSO narrow RSA/11mm | 38 | 140 | 11 | 1 | 3 |

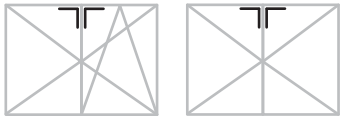

- For suitable strikers, see PDB
  timber 12 mm and KF:
  striker FRZV02
  striker short FRZV12
  timber 4 mm:
  striker FRZV05
  striker short FRZV08
- The range of application conforms to the connecting components
- For basic security
- * Note: screw-fix additionally with 4.1x… screws!



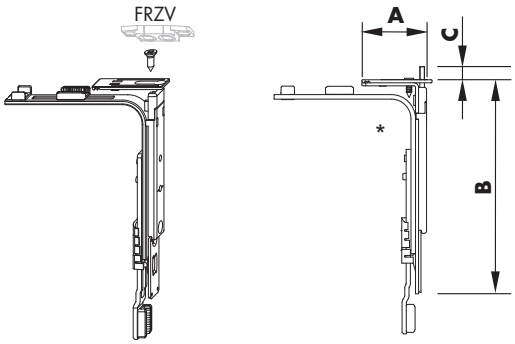


## Sales information

| Description | Part number | Surface | Colour | Box quantity |
|---|---|---|---|---|
| corn.drive VSO narrow RSA 14mm | TEUL4130-10001_ | Titan Silver | without | 1 pc |
| | TEUL4130-10005_ | Titan Silver | without | 50 pcs |
| corn.drive VSO narrow RSA/11mm | TEUL4150-10001_ | Titan Silver | without | 1 pc |
| | TEUL4150-10005_ | Titan Silver | without | 50 pcs |

## Technical information

| Part number | Description | Dimensions (mm) | | | |
|---|---|---|---|---|---|
| | | A | B | | |
| FEUL0420-... | corn.drive RB 1RS SB .. | 204 | 69 | 1 | 3 |

- Can be aligned to the arch
- The range of application conforms to the connecting components
- * Bag of accessories SF/SB refer to assembly accessories



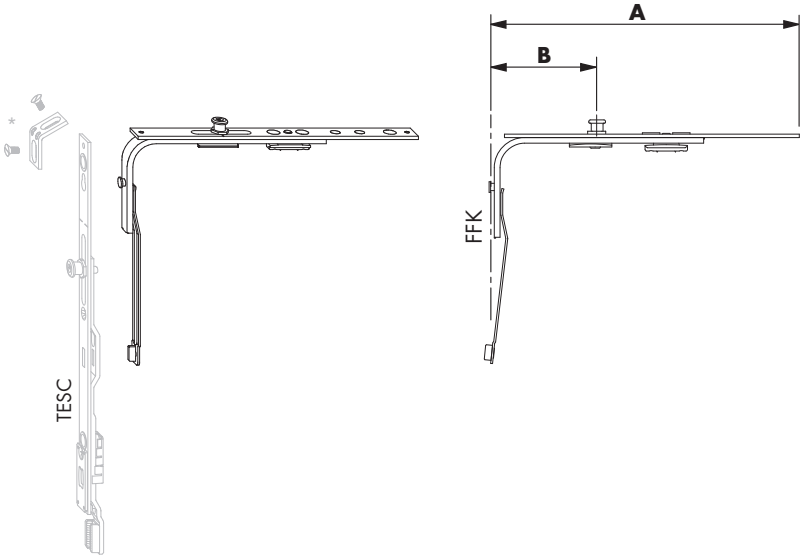


## Sales information

| Description | Part number | Surface | Colour | Box quantity |
|---|---|---|---|---|
| corn.drive RB 1RS SB .. | FEUL0420-10001_ | Titan Silver | without | 1 pc |
| | FEUL0420-10004_ | Titan Silver | without | 25 pcs |

## Technical information

| Part number | Description | Dimensions (mm) | | | | |
|---|---|---|---|---|---|---|
| | | A | B | C | | |
| TEUL4100-... | corn.drive AF VSO UE 1M 1RS | 140 | 140 | 63 | 2 | 4 |

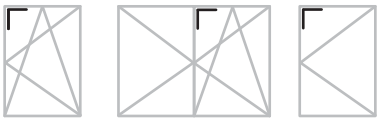

- With magnetic roller for electronic locking and opening monitoring AEROCONTROL (not suitable as a locking point)
- The range of application conforms to the connecting components
- Applicable on basic security and RC1



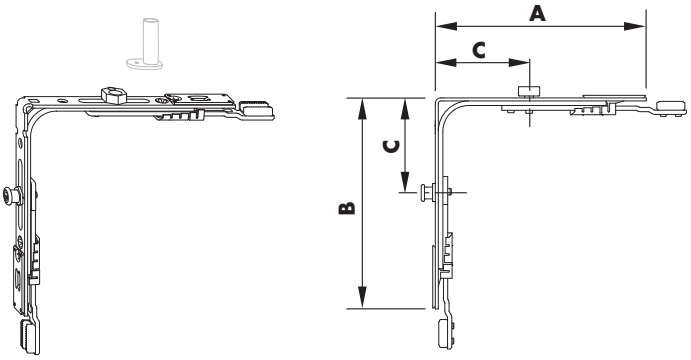


## Sales information

| Description | Part number | Surface | Colour | Box quantity |
|---|---|---|---|---|
| corn.drive AF VSO UE 1M 1RS | TEUL4100-10001_ | Titan Silver | without | 1 pc |
| | TEUL4100-10005_ | Titan Silver | without | 50 pcs |

## Technical information

| Part number | Description | Dimensions (mm) | | | | |
|---|---|---|---|---|---|---|
| | | A | B | C | | |
| TEUL4220-... | corn.drive AF VSO MSP 1RS | 140 | 63 | 62 | 1 | 4 |
| FMMS0010-... | accessories MSP A0608 | - | - | - | - | - |
| FMMS0040-... | accessories MSP A1660 | - | - | - | - | - |
| FMMS0050-... | accessories MSP A1661 | - | - | - | - | - |
| FMMS0060-... | accessories MSP A1860 | - | - | - | - | - |
| FMMS0070-... | accessories MSP A1865 | - | - | - | - | - |
| FMMS0080-... | accessories MSP A2040 | - | - | - | - | - |
| FMMS0090-... | accessories MSP A2260 | - | - | - | - | - |
| FMMS0100-... | accessories MSP A2860 | - | - | - | - | - |
| FMMS0020-... | accessories MSP A1220/1 | - | - | - | - | - |



- Applicable on basic security and RC1
- The range of application conforms to the connecting components

- * Acc. bag MSP A. . . .
  A0608 for Kömmerling Eurodur 3S - opening width 7-24 - number of vent positions 4
  A1660 for Veka Softline AD - opening width 5-33 - number of vent positions 6
  A1661 for KBE AD - opening width 5-33 - number of vent positions 6
  A1860 for Inoutic AD - opening width 7-24 - number of vent positions 4
  A1865 for Inoutic AD MB - opening width 5-33 - number of vent positions 4
  A2040 for Veka Topline und Aluplast - opening width 7-24 - number of vent positions 4
  A2260 for Trocal Confort - opening width 7-24 - number of vent positions 4
  A2860 for Salamander und Rehau S730/735 - opening width 7-24 - number of vent positions 4
  A1220/1 for timber 12 mm eurofold 18/8

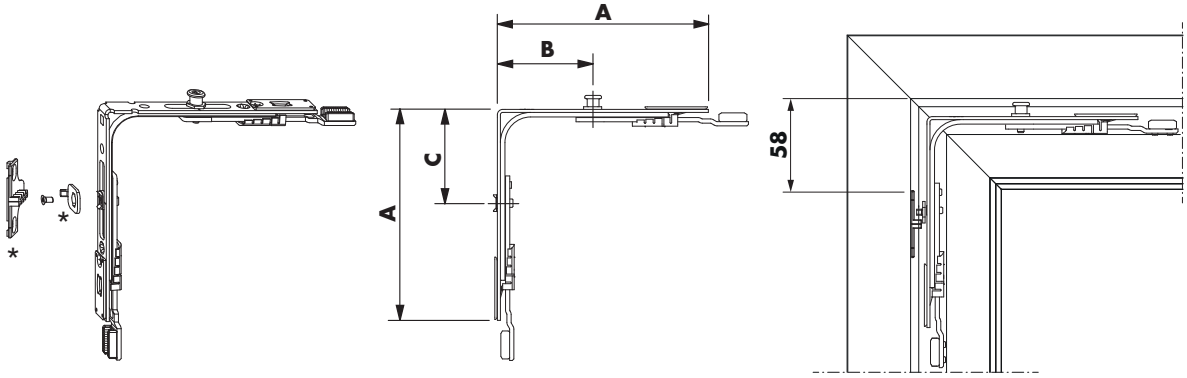

## Sales information

| Description | Part number | Surface | Colour | Box quantity |
|---|---|---|---|---|
| corn.drive AF VSO MSP 1RS | TEUL4220-10001_ | Titan Silver | without | 1 pc |
| | TEUL4220-10005_ | Titan Silver | without | 50 pcs |
| accessories MSP A0608 | FMMS0010-10005_ | Titan Silver | without | 50 pcs |
| accessories MSP A1660 | FMMS0040-10005_ | Titan Silver | without | 50 pcs |
| accessories MSP A1661 | FMMS0050-10005_ | Titan Silver | without | 50 pcs |
| accessories MSP A1860 | FMMS0060-10005_ | Titan Silver | without | 50 pcs |
| accessories MSP A1865 | FMMS0070-10005_ | Titan Silver | without | 50 pcs |
| accessories MSP A2040 | FMMS0080-10005_ | Titan Silver | without | 50 pcs |
| accessories MSP A2260 | FMMS0090-10005_ | Titan Silver | without | 50 pcs |
| accessories MSP A2860 | FMMS0100-10005_ | Titan Silver | without | 50 pcs |
| accessories MSP A1220/1 | FMMS0020-10005_ | Titan Silver | without | 50 pcs |

## Technical information

| Part number | Description | Dimensions (mm) | | | | |
|---|---|---|---|---|---|---|
| | | A | B | C | | |
| TEUL4160-... | corn.drive AF VSO FPS 1RS | 140 | 140 | 63 | 1 | 4 |

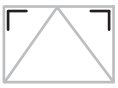

- Use in conjunction with the security stay (ASFP021_ - 0230)
- The range of application conforms to the connecting components



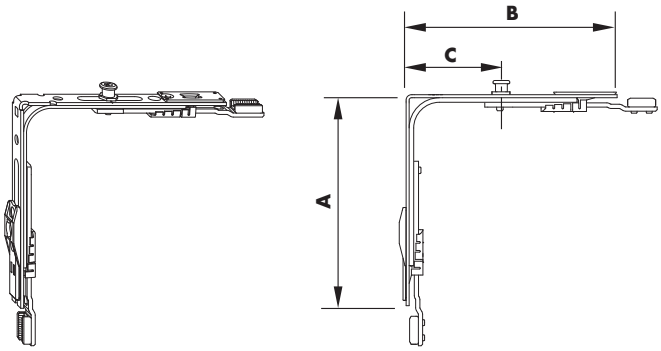


## Sales information

| Description | Part number | Surface | Colour | Box quantity |
|---|---|---|---|---|
| corn.drive AF VSO FPS 1RS | TEUL4160-10001_ | Titan Silver | without | 1 pc |
| | TEUL4160-10005_ | Titan Silver | without | 50 pcs |

## Technical information

| Part number | Description | Dimensions (mm) | | | | |
|---|---|---|---|---|---|---|
| | | A | B | C | | |
| TEUL5010-... | corn.drive AF VSU/K+ FH 1S | 140 | 210 | 63 | 1 | 5 |

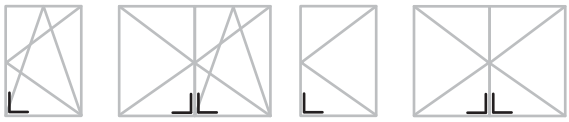

- Coupling location to slide underneath
- With preassembled sash lift
- Tilt lock bearing S-ES (SL-S) FH profile-related, refer to PDB line item FRKA (FRKJ)
- The range of application conforms to the connecting components



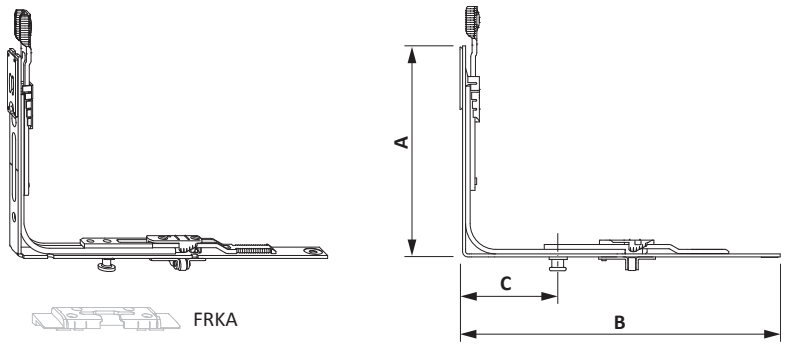


## Sales information

| Description | Part number | Surface | Colour | Box quantity |
|---|---|---|---|---|
| corn.drive AF VSU/K+ FH 1S | TEUL5010-10001_ | Titan Silver | without | 1 pc |
| | TEUL5010-10005_ | Titan Silver | without | 50 pcs |
| | TEUL5010-10029_ | Titan Silver | without | 1000 pcs |

## Technical information

| Part number | Description | Dimensions (mm) | | | | |
|---|---|---|---|---|---|---|
| | | A | B | C | | |
| TEUL5080-... | corn.drive AF VSU/K+ FG 1S | 140 | 210 | 63 | 1 | 5 |

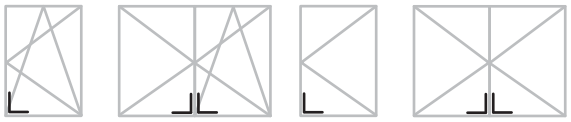

- Coupling location to slide underneath
- With preassembled sash lift
- Tilt lock bearing S-ES (SL-S) FH profile-related, refer to PDB line item FRKA (FRKJ)
- The range of application conforms to the connecting components



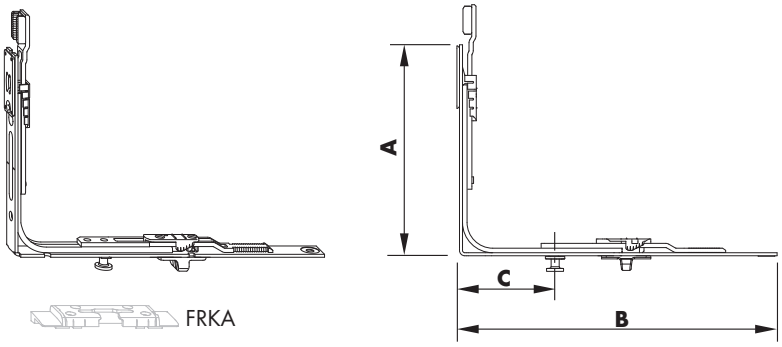


## Sales information

| Description | Part number | Surface | Colour | Box quantity |
|---|---|---|---|---|
| corn.drive AF VSU/K+ FG 1S | TEUL5080-10001_ | Titan Silver | without | 1 pc |
| | TEUL5080-10005_ | Titan Silver | without | 50 pcs |

## Technical information

| Part number | Description | Dimensions (mm) | | | | |
|---|---|---|---|---|---|---|
| | | A | B | C | | |
| TEUL5020-... | corn.drive AF VSU/K+ FH 1S 1RS A0055 | 140 | 210 | 63 | 2 | 5 |

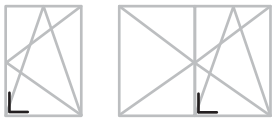

- Coupling location to slide underneath
- With preassembled sash lift
- For RC2
- Tilt lock bearing S-ES (SL-S) FH profile-related, refer to PDB line item FRKA (FRKJ)
- The range of application conforms to the connecting components



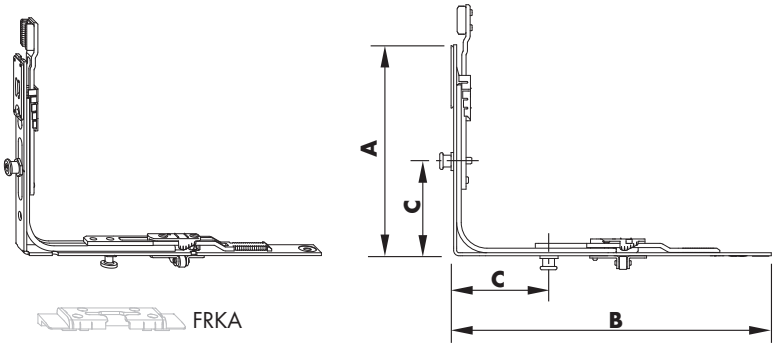


## Sales information

| Description | Part number | Surface | Colour | Box quantity |
|---|---|---|---|---|
| corn.drive AF VSU/K+ FH 1S 1RS A0055 | TEUL5020-10001_ | Titan Silver | without | 1 pc |
| | TEUL5020-10005_ | Titan Silver | without | 50 pcs |

## Technical information

| Part number | Description | Dimensions (mm) | | | | |
|---|---|---|---|---|---|---|
| | | A | B | C | | |
| TEUL5250-... | corn.drive AF VSU/K+ 1S 1RS A0055 | 140 | 210 | 63 | 2 | 5 |

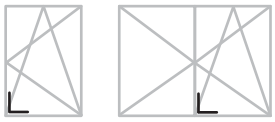

- Coupling location to slide underneath
- Tilt lock bearing S-ES (SL-S) FH profile-related, refer to PDB line item FRKA (FRKJ)
- The range of application conforms to the connecting components



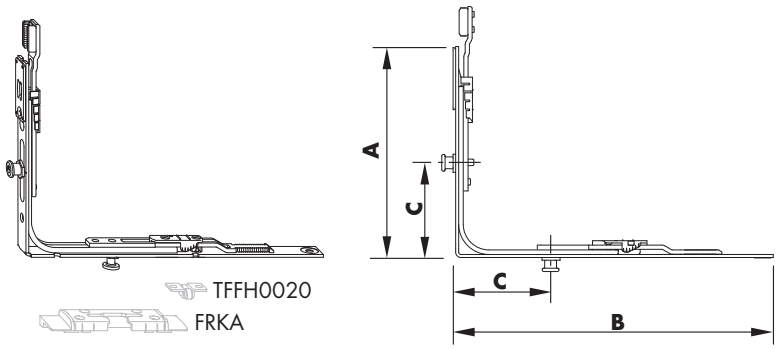


## Sales information

| Description | Part number | Surface | Colour | Box quantity |
|---|---|---|---|---|
| corn.drive AF VSU/K+ 1S 1RS A0055 | TEUL5250-10001_ | Titan Silver | without | 1 pc |
| | TEUL5250-10005_ | Titan Silver | without | 50 pcs |

## Technical information

| Part number | Description | Dimensions (mm) | | | | |
|---|---|---|---|---|---|---|
| | | A | B | C | | |
| TEUL5090-... | corn.drive AF VSU/K+ nar.FH 1S | 38 | 210 | 63 | 1 | 4 |

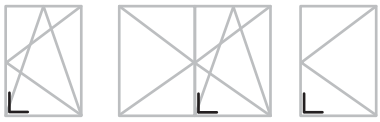

- Applicable on basic security and RC1
- Coupling location to slide underneath
- With preassembled sash lift
- Tilt lock bearing S-ES (SL-S) FH profile-related, refer to PDB line item FRKA (FRKJ)
- The range of application conforms to the connecting components
- * Note: screw-fix additionally with 4.1x… screws!



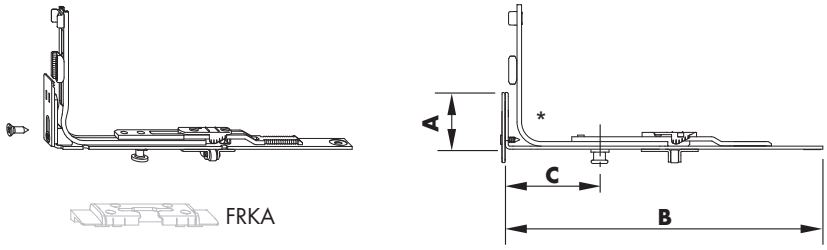


## Sales information

| Description | Part number | Surface | Colour | Box quantity |
|---|---|---|---|---|
| corn.drive AF VSU/K+ nar.FH 1S | TEUL5090-10001_ | Titan Silver | without | 1 pc |
| | TEUL5090-10005_ | Titan Silver | without | 50 pcs |

## Technical information

| Part number | Description | Dimensions (mm) | | | | |
|---|---|---|---|---|---|---|
| | | A | B | C | | |
| TEUL5110-... | corn.drive AF VSU/K+WK2 FHSB1S | 140 | 210 | 63 | 1 | 5 |

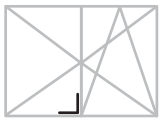

- Coupling location to slide underneath
- Use in slave sashes with opposing fitting groove
- For RC2
- Tilt lock bearing S-ES (SL-S) FH profile-related, refer to PDB line item FRKA (FRKJ)
- The range of application conforms to the connecting components



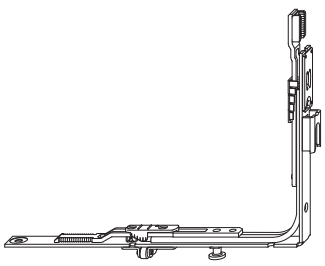

FRKA

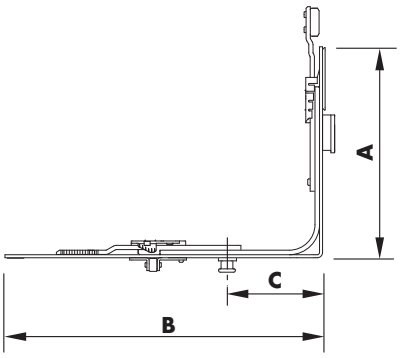


## Sales information

| Description | Part number | Surface | Colour | Box quantity |
|---|---|---|---|---|
| corn.drive AF VSU/K+WK2 FHSB1S | TEUL5110-10001_ | Titan Silver | without | 1 pc |
| | TEUL5110-10005_ | Titan Silver | without | 50 pcs |

## Technical information

| Part number | Description | Dimensions (mm) | | | | |
|---|---|---|---|---|---|---|
| | | A | B | C | | |
| TEUL1230-... | corn.drive AF VSU/K+ DS 1S | 140 | 210 | 63 | 1 | 5 |

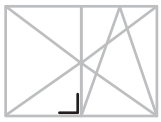

- Coupling location to slide underneath
- Can be used in the secondary sash with groove ../8x4
- Tilt lock bearing S-ES (SL-S) FH profile-related, refer to PDB line item FRKA (FRKJ)
- The range of application conforms to the connecting components



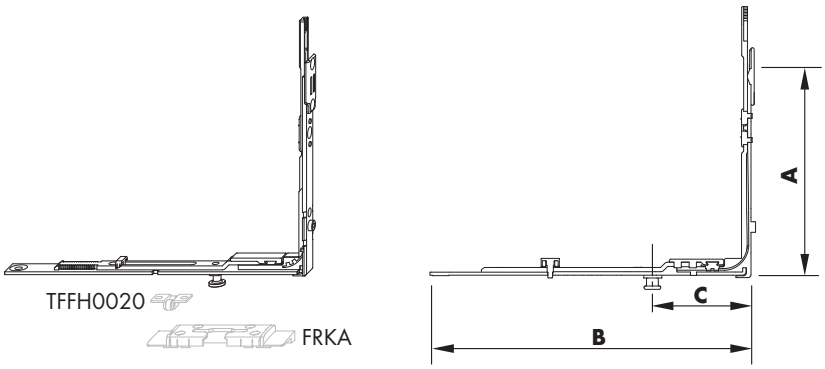


## Sales information

| Description | Part number | Surface | Colour | Box quantity |
|---|---|---|---|---|
| corn.drive AF VSU/K+ DS 1S | TEUL1230-10001_ | Titan Silver | without | 1 pc |
| | TEUL1230-10004_ | Titan Silver | without | 25 pcs |

## Technical information

| Part number | Description | Dimensions (mm) | | | | |
|---|---|---|---|---|---|---|
| | | A | B | C | | |
| TEUL5130-... | corn.drive AF VSU/A FHRBnar.1S | 422 | 63 | 154 | 1 | 3 |

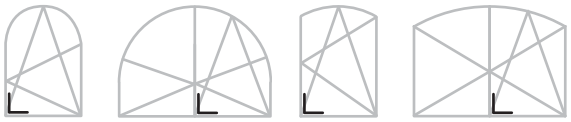

- With preassembled sash lift
- Tilt lock bearing S-ES (SL-S) FH profile-related, refer to PDB line item FRKA (FRKJ)
- Packer refer to PDB line item FRUP02
- The range of application conforms to the connecting components
- * Note: screw-fix additionally with 4.1x… screws!
- Note: countersunk tapping screw 3.9x13 enclosed



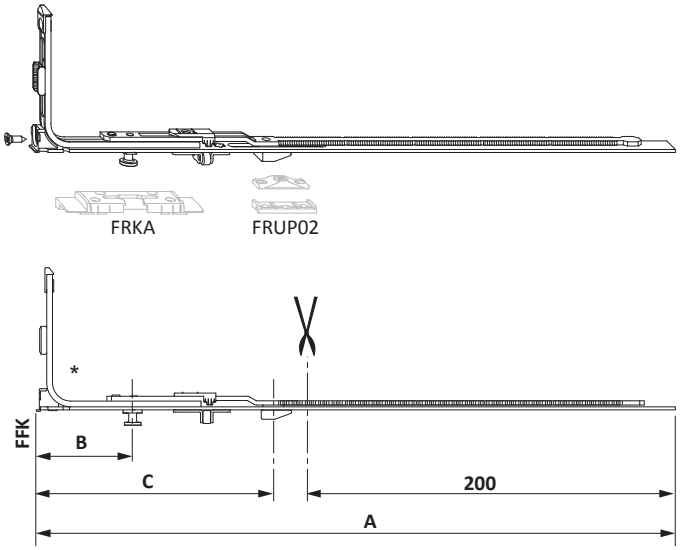


## Sales information

| Description | Part number | Surface | Colour | Box quantity |
|---|---|---|---|---|
| corn.drive AF VSU/A FHRBnar.1S | TEUL5130-10001_ | Titan Silver | without | 1 pc |
| | TEUL5130-10005_ | Titan Silver | without | 50 pcs |

## Technical information

| Part number | Description | Dimensions (mm) | | | | | |
|---|---|---|---|---|---|---|---|
| | | A | B | C | D | | |
| PEUJ0010-... | corn.drive AF/PSK 1S 1RS | 140 | 140 | 63 | 63 | 2 | 4 |
| PEUJ0020-... | corn.drive AF/PSK 1S | 140 | 140 | 63 | - | 1 | 4 |

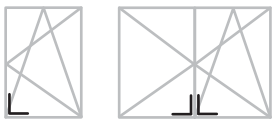

- The range of application conforms to the connecting components
- central lock
- PEUJ0010 suitable from RC1
- PEUJ0020 also suitable for secondary sashes



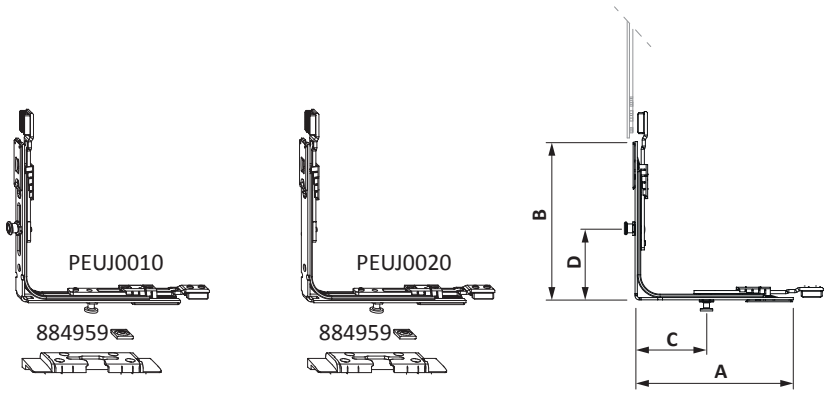


## Sales information

| Description | Part number | Surface | Colour | Box quantity |
|---|---|---|---|---|
| corn.drive AF/PSK 1S 1RS | PEUJ0010-10001_ | Titan Silver | without | 1 pc |
| | PEUJ0010-10005_ | Titan Silver | without | 50 pcs |
| corn.drive AF/PSK 1S | PEUJ0020-10001_ | Titan Silver | without | 1 pc |
| | PEUJ0020-10005_ | Titan Silver | without | 50 pcs |

## Technical information

| Part number | Description | Dimensions (mm) | | | | |
|---|---|---|---|---|---|---|
| | | A | B | C | | |
| TEUL5030-... | corn.drive AF VSU/K 56+ 1S 1RS | 140 | 210 | 64 | 2 | 4 |

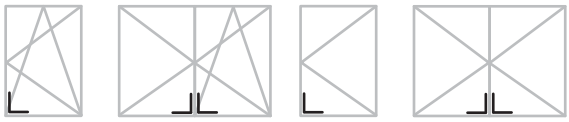

- Coupling location to slide underneath
- Tilt lock bearing 56 S(L)-RS profile-related, refer to PDB line item TRKF
- The mishandling device (TFBS) on the corner drive requires the sash to be mounted in the turning position.
- The range of application conforms to the connecting components



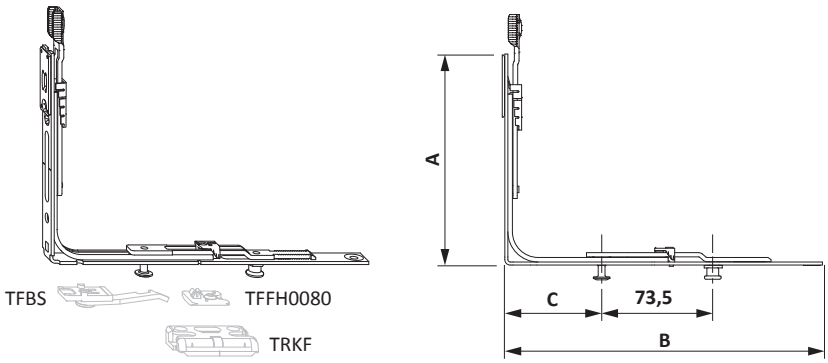


## Sales information

| Description | Part number | Surface | Colour | Box quantity |
|---|---|---|---|---|
| corn.drive AF VSU/K 56+ 1S 1RS | TEUL5030-10001_ | Titan Silver | without | 1 pc |
| | TEUL5030-10005_ | Titan Silver | without | 50 pcs |
| | TEUL5030-10028_ | Titan Silver | without | 900 pcs |

## Technical information

| Part number | Description | Dimensions (mm) | | | | | |
|---|---|---|---|---|---|---|---|
| | | A | B | C | D | | |
| TEUL5040-... | corn.drive AF VSU/K 56+ 1S 2RS | 140 | 210 | 64 | 63 | 3 | 4 |

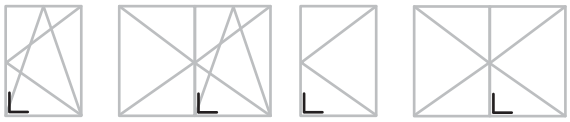

- Coupling location to slide underneath
- For RC2
- Tilt lock bearing 56 S(L)-RS profile-related, refer to PDB line item TRKF
- The mishandling device (TFBS) on the corner drive requires the sash to be mounted in the turning position.
- The range of application conforms to the connecting components



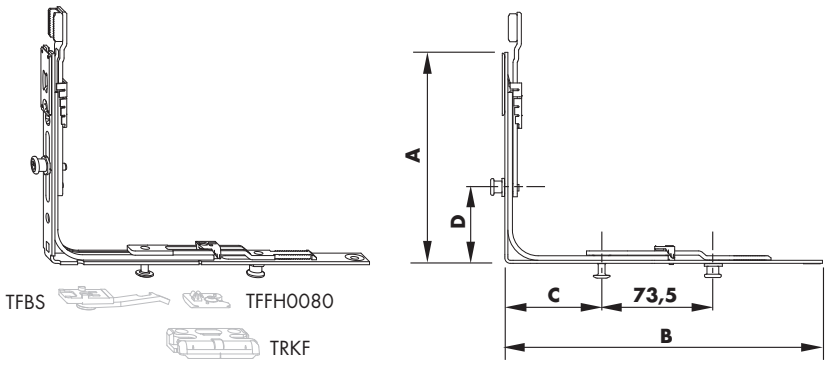


## Sales information

| Description | Part number | Surface | Colour | Box quantity |
|---|---|---|---|---|
| corn.drive AF VSU/K 56+ 1S 2RS | TEUL5040-10001_ | Titan Silver | without | 1 pc |
| | TEUL5040-10005_ | Titan Silver | without | 50 pcs |

## Technical information

| Part number | Description | Dimensions (mm) | | | | |
|---|---|---|---|---|---|---|
| | | A | B | C | | |
| TEUL5190-... | corn.drive AF VSU/K 56+FH1S1RS | 140 | 210 | 63 | 2 | 4 |

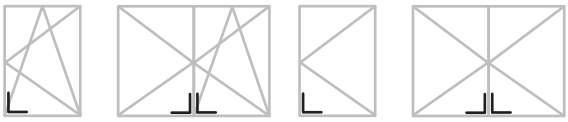



- Coupling location to slide underneath
- With integrated run-up plate FH
- Tilt lock bearing 56 S(L)-RS profile-related, refer to PDB line item TRKF
- The range of application conforms to the connecting components
- **Please observe:**
  When using the mishandling device (TFBS) on the corner drive VSU, the sash must only be mounted in the turning position with the sash open.

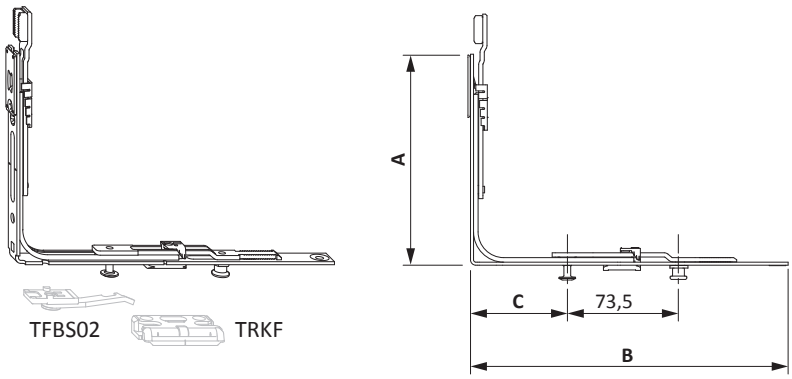


## Sales information

| Description | Part number | Surface | Colour | Box quantity |
|---|---|---|---|---|
| corn.drive AF VSU/K 56+FH1S1RS | TEUL5190-10001_ | Titan Silver | without | 1 pc |
| | TEUL5190-10005_ | Titan Silver | without | 50 pcs |
| | TEUL5190-10028_ | Titan Silver | without | 900 pcs |

## Technical information

| Part number | Description | Dimensions (mm) | | | Groove axis | | |
|---|---|---|---|---|---|---|---|
| | | A | B | C | | | |
| TEUL5151-... | corn.driveAFVSU/K56+FHFBS1S1RS 9 rh. | 140 | 210 | 63 | 9 | 2 | 4 |
| TEUL5152-... | corn.driveAFVSU/K56+FHFBS1S1RS 9 lh. | 140 | 210 | 63 | 9 | 2 | 4 |
| TEUL5061-... | corn.driveAFVSU/K56+FHFBS1S1RS 13 rh. | 140 | 210 | 63 | 13 | 2 | 4 |
| TEUL5062-... | corn.driveAFVSU/K56+FHFBS1S1RS 13 lh. | 140 | 210 | 63 | 13 | 2 | 4 |

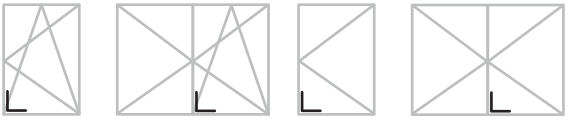

- Coupling location to slide underneath
- With integrated mishandling device and run-up plate FH
- Tilt lock bearing 56 S(L)-RS profile-related, refer to PDB line item TRKF
- The range of application conforms to the connecting components
- **Please observe:**
  When using the mishandling device (TFBS) on the corner drive VSU, the sash must only be mounted in the turning position with the sash open.

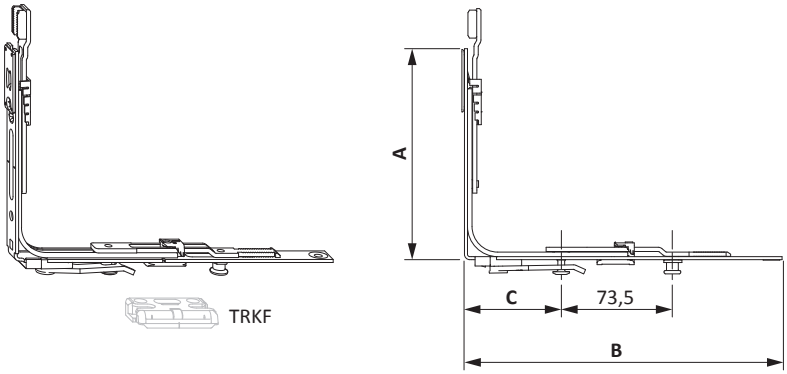


## Sales information

| Description | Part number | Surface | Colour | Box quantity |
|---|---|---|---|---|
| corn.driveAFVSU/K56+FHFBS1S1RS 9 rh. | TEUL5151-10001_ | Titan Silver | without | 1 pc |
| | TEUL5151-10005_ | Titan Silver | without | 50 pcs |
| corn.driveAFVSU/K56+FHFBS1S1RS 9 lh. | TEUL5152-10001_ | Titan Silver | without | 1 pc |
| | TEUL5152-10005_ | Titan Silver | without | 50 pcs |
| corn.driveAFVSU/K56+FHFBS1S1RS 13 rh. | TEUL5061-10001_ | Titan Silver | without | 1 pc |
| | TEUL5061-10005_ | Titan Silver | without | 50 pcs |
| | TEUL5061-10028_ | Titan Silver | without | 900 pcs |
| corn.driveAFVSU/K56+FHFBS1S1RS 13 lh. | TEUL5062-10001_ | Titan Silver | without | 1 pc |
| | TEUL5062-10005_ | Titan Silver | without | 50 pcs |
| | TEUL5062-10028_ | Titan Silver | without | 900 pcs |

## Technical information

| Part number | Description | Dimensions (mm) | | | | Groove axis | | |
|---|---|---|---|---|---|---|---|---|
| | | A | B | C | D | | | |
| TEUL5071-... | corn.driveAFVSU/K56+FHFBS1S2RS 13 A0055 rh. | 140 | 210 | 64 | 63 | 13 | 3 | 4 |
| TEUL5072-... | corn.driveAFVSU/K56+FHFBS1S2RS 13 A0055 lh. | - | - | - | - | 13 | 3 | 4 |
| TEUL5161-... | corn.driveAFVSU/K56+FHFBS1S2RS 9 A0055 rh. | 140 | 210 | 64 | 63 | 9 | 3 | 4 |
| TEUL5162-... | corn.driveAFVSU/K56+FHFBS1S2RS 9 A0055 lh. | - | - | - | - | 9 | 3 | 4 |

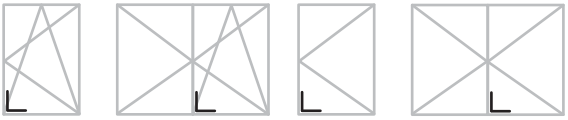

2.1

- Coupling location to slide underneath
- For RC2
- With integrated mishandling device and run-up plate FH
- Tilt lock bearing 56 S(L)-RS profile-related, refer to PDB line item TRKF
- The mishandling device (TFBS) on the corner drive requires the sash to be mounted in the turning position.
- The range of application conforms to the connecting components

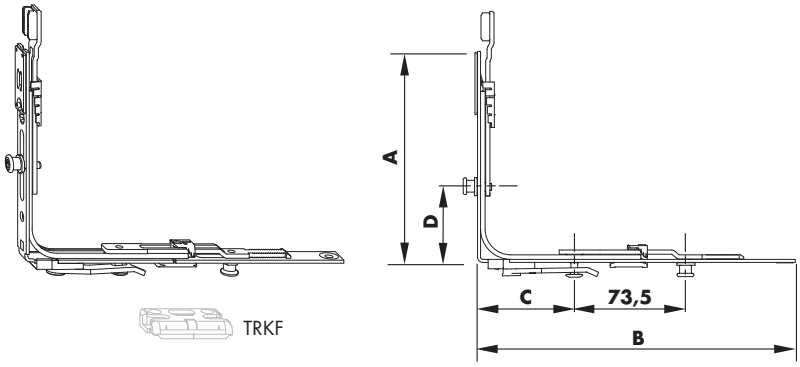


## Sales information

| Description | Part number | Surface | Colour | Box quantity |
|---|---|---|---|---|
| corn.driveAFVSU/K56+FHFBS1S2RS 13 A0055 rh. | TEUL5071-10001_ | Titan Silver | without | 1 pc |
| | TEUL5071-10005_ | Titan Silver | without | 50 pcs |
| corn.driveAFVSU/K56+FHFBS1S2RS 13 A0055 lh. | TEUL5072-10001_ | Titan Silver | without | 1 pc |
| | TEUL5072-10005_ | Titan Silver | without | 50 pcs |
| corn.driveAFVSU/K56+FHFBS1S2RS 9 A0055 rh. | TEUL5161-10001_ | Titan Silver | without | 1 pc |
| | TEUL5161-10005_ | Titan Silver | without | 50 pcs |
| corn.driveAFVSU/K56+FHFBS1S2RS 9 A0055 lh. | TEUL5162-10001_ | Titan Silver | without | 1 pc |
| | TEUL5162-10005_ | Titan Silver | without | 50 pcs |

## Technical information

| Part number | Description | Dimensions (mm) | | | | |
|---|---|---|---|---|---|---|
| | | A | B | C | | |
| TEUL5120-... | corn.drive AFVSU/K 56+ SB1S1RS | 140 | 210 | 64 | 2 | 4 |

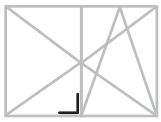

- Coupling location to slide underneath
- For RC2
- Tilt lock bearing 56 S(L)-RS profile-related, refer to PDB line item TRKF
- The range of application conforms to the connecting components



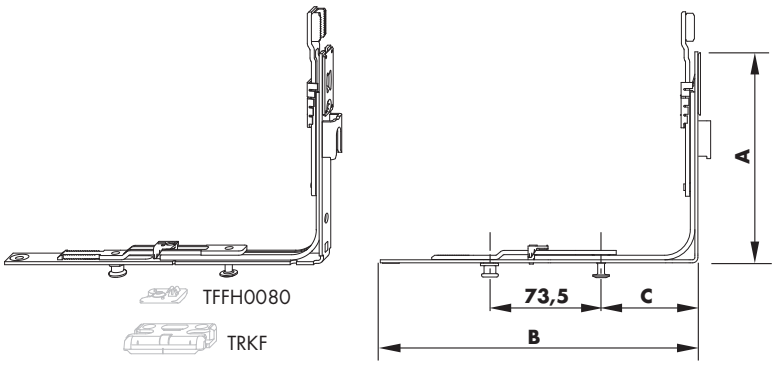


## Sales information

| Description | Part number | Surface | Colour | Box quantity |
|---|---|---|---|---|
| corn.drive AFVSU/K 56+ SB1S1RS | TEUL5120-10001_ | Titan Silver | without | 1 pc |
| | TEUL5120-10005_ | Titan Silver | without | 50 pcs |

## Technical information

| Part number | Description | Dimensions (mm) | | | | |
|---|---|---|---|---|---|---|
| | | A | B | C | | |
| TEUL5100-... | corn.drive AFVSU/K56+nar.1S1RS | 38 | 210 | 63 | 2 | 3 |

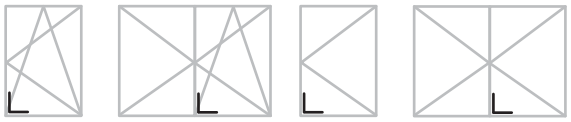



- Coupling location to slide underneath
- Striker plate S(L)-RS profile-related, refer to PDB line item TRSK
- * Note: screw-fix additionally with 4.1x… screws!
- The range of application conforms to the connecting components
- **Please observe:**
  When using the mishandling device (TFBS) on the corner drive VSU, the sash must only be mounted in the turning position with the sash open.

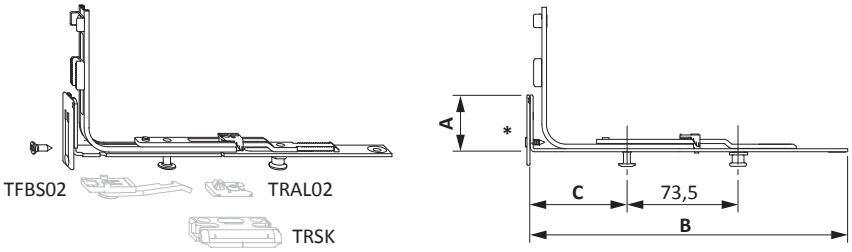


## Sales information

| Description | Part number | Surface | Colour | Box quantity |
|---|---|---|---|---|
| corn.drive AFVSU/K56+nar.1S1RS | TEUL5100-10001_ | Titan Silver | without | 1 pc |
| | TEUL5100-10005_ | Titan Silver | without | 50 pcs |

## Technical information

| Part number | Description | Dimensions (mm) | | | | |
|---|---|---|---|---|---|---|
| | | A | B | C | | |
| TEUL5050-... | corn.driveAFVSU/K56+FHFBS1S1RS | 140 | 210 | 63 | 2 | 4 |

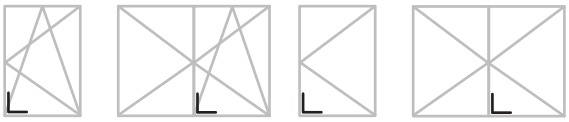

- Coupling location to slide underneath
- Run up block for sash lift FBS, refer to PDB line item TRAU
- Striker plate S(L)-RS profile-related, refer to PDB line item TRSK
- The range of application conforms to the connecting components
- **Please observe:**
  When using the mishandling device (TFBS) on the corner drive VSU, the sash must only be mounted in the turning position with the sash open.



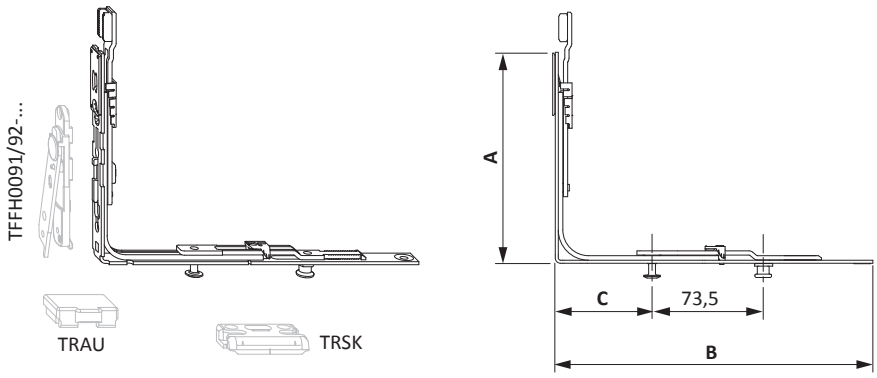


## Sales information

| Description | Part number | Surface | Colour | Box quantity |
|---|---|---|---|---|
| corn.driveAFVSU/K56+FHFBS1S1RS | TEUL5050-10001_ | Titan Silver | without | 1 pc |
| | TEUL5050-10005_ | Titan Silver | without | 50 pcs |
| | TEUL5050-10029_ | Titan Silver | without | 1000 pcs |

## Technical information

| Part number | Description | Dimensions (mm) | | | | |
|---|---|---|---|---|---|---|
| | | A | B | C | | |
| TEUL5210-... | corn.drive AF VSU/K+ DS 1S A0273 | 140 | 210 | 63 | 1 | 5 |

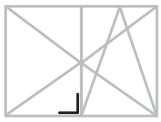



- Coupling location to slide underneath
- Can be used in the secondary sash with groove ../8x4
- With extended S-ES cam for thresholds with 10 mm airgap
- In conjunction with the tilt lock bearing SL-S FH, refer to the PDB
- The range of application conforms to the connecting components

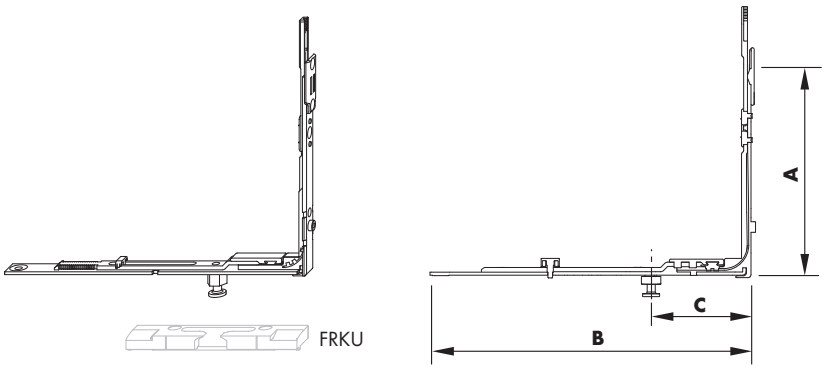


## Sales information

| Description | Part number | Surface | Colour | Box quantity |
|---|---|---|---|---|
| corn.drive AF VSU/K+ DS 1S A0273 | TEUL5210-10001_ | Titan Silver | without | 1 pc |
| | TEUL5210-10004_ | Titan Silver | without | 25 pcs |

## Technical information

| Part number | Description | Dimensions (mm) | | | |
|---|---|---|---|---|---|
| | | A | B | | |
| TEUL5140-... | corn.drive AFSE VSU/K+FH FBS1S | 140 | 210 | 1 | 4 |

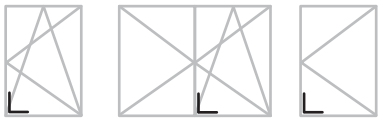

- Coupling location to slide underneath
- Switching function TBT = TILT BEFORE TURN
- Run up block for sash lift FBS, refer to PDB line item TRAU
- Tilt lock bearing S-ES FH TBT profile-related, refer to PDB line item FRKB
- The range of application conforms to the connecting components



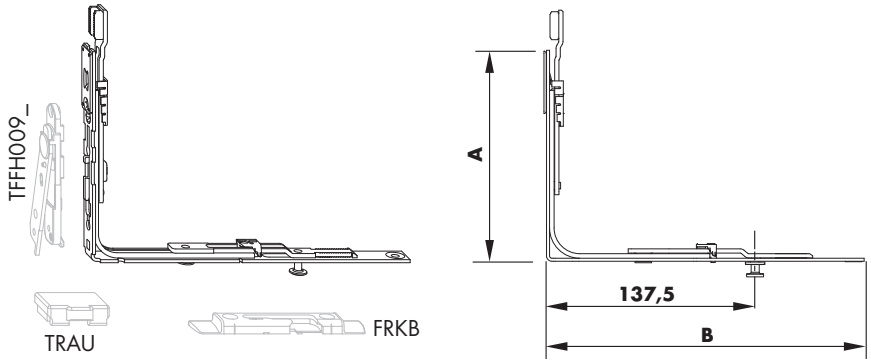


## Sales information

| Description | Part number | Surface | Colour | Box quantity |
|---|---|---|---|---|
| corn.drive AFSE VSU/K+FH FBS1S | TEUL5140-10001_ | Titan Silver | without | 1 pc |
| | TEUL5140-10005_ | Titan Silver | without | 50 pcs |

## Technical information

| Part number | Description | Dimensions (mm) | | | |
|---|---|---|---|---|---|
| | | A | B | | |
| TEUL5170-... | corn.drive AFSEVSU/K 56+nar.1S | 38 | 210 | 1 | 3 |

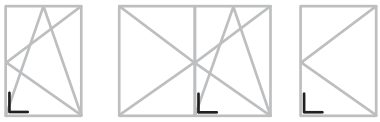



- Applicable on basic security and RC1
- Coupling location to slide underneath
- Switching function TBT = TILT BEFORE TURN
- Tilt lock bearing S-ES FH TBT profile-related, refer to PDB line item FRKB
- The range of application conforms to the connecting components
- * Note: screw-fix additionally with 4.1x… screws!

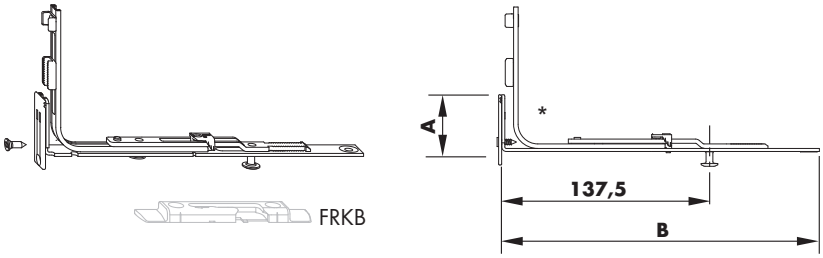


## Sales information

| Description | Part number | Surface | Colour | Box quantity |
|---|---|---|---|---|
| corn.drive AFSEVSU/K 56+nar.1S | TEUL5170-10001_ | Titan Silver | without | 1 pc |
| | TEUL5170-10005_ | Titan Silver | without | 50 pcs |

## Technical information

| Part number | Description | FFH | Dimensions (mm) | | | |
|---|---|---|---|---|---|---|
| | | | A | B | | |
| TEUL2410-... | corn.drive BS/K3 sz 1+ 1RS | 801 - 1200 | 565 | 480 | 1 | 4 |
| TEUL2420-... | corn.drive BS/K3 sz 2+ 1RS | 1201 - 3000 | 765 | 680 | 1 | 4 |

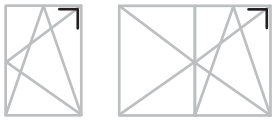

- For installation on welded sashes
- Coupling location to slide underneath
- For basic security
- The minimum sash rebate height (FFH) conforms to the locking distance



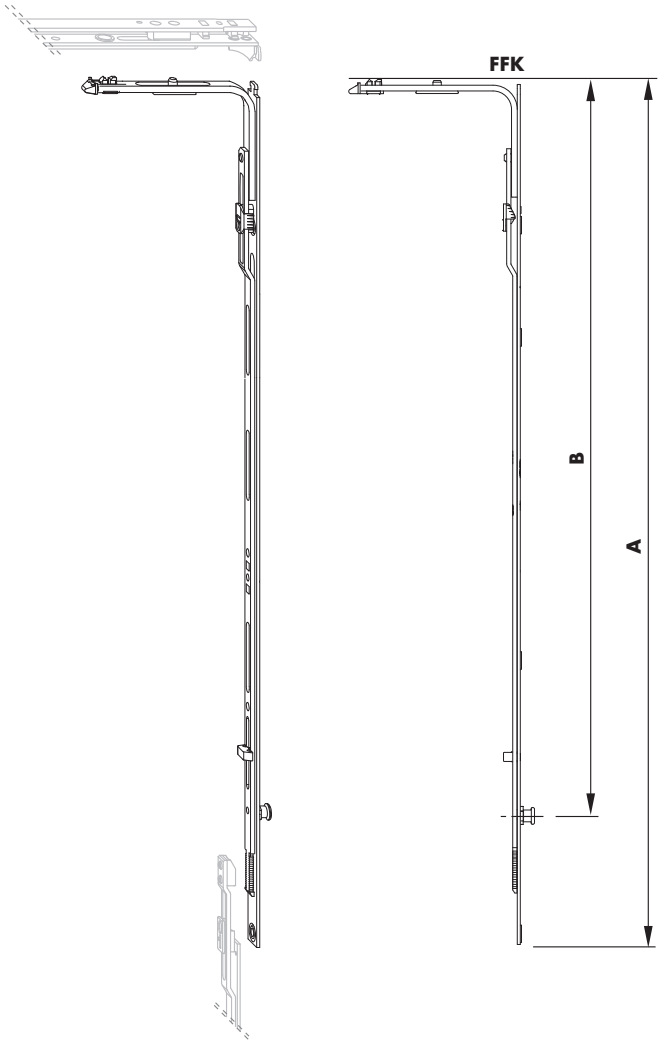

## Sales information

| Description | Part number | Surface | Colour | Box quantity |
|---|---|---|---|---|
| corn.drive BS/K3 sz 1+ 1RS | TEUL2410-10001_ | Titan Silver | without | 1 pc |
| | TEUL2410-10004_ | Titan Silver | without | 25 pcs |
| | TEUL2410-10029_ | Titan Silver | without | 1000 pcs |
| | TEUL2410-10048_ | Titan Silver | without | 600 pcs |
| corn.drive BS/K3 sz 2+ 1RS | TEUL2420-10001_ | Titan Silver | without | 1 pc |
| | TEUL2420-10004_ | Titan Silver | without | 25 pcs |
| | TEUL2420-10008_ | Titan Silver | without | 500 pcs |
| | TEUL2420-10047_ | Titan Silver | without | 500 pcs |

## Technical information

| Part number | Description | FFH | Dimensions (mm) | | | | |
|---|---|---|---|---|---|---|---|
| | | | A | B | C | | |
| TEUL2380-... | corn.drive BS/K3 sz 1+ 2RS | 801 - 1200 | 565 | 480 | 140 | 2 | 4 |
| TEUL2390-... | corn.drive BS/K3 sz 2+ 2RS | 1201 - 3000 | 765 | 680 | 140 | 2 | 4 |

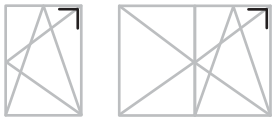

- For installation on welded sashes
- Coupling location to slide underneath
- For RC2 anti-lift device (TFAH) required, refer to the PDB
- The minimum sash rebate height (FFH) conforms to the locking distance



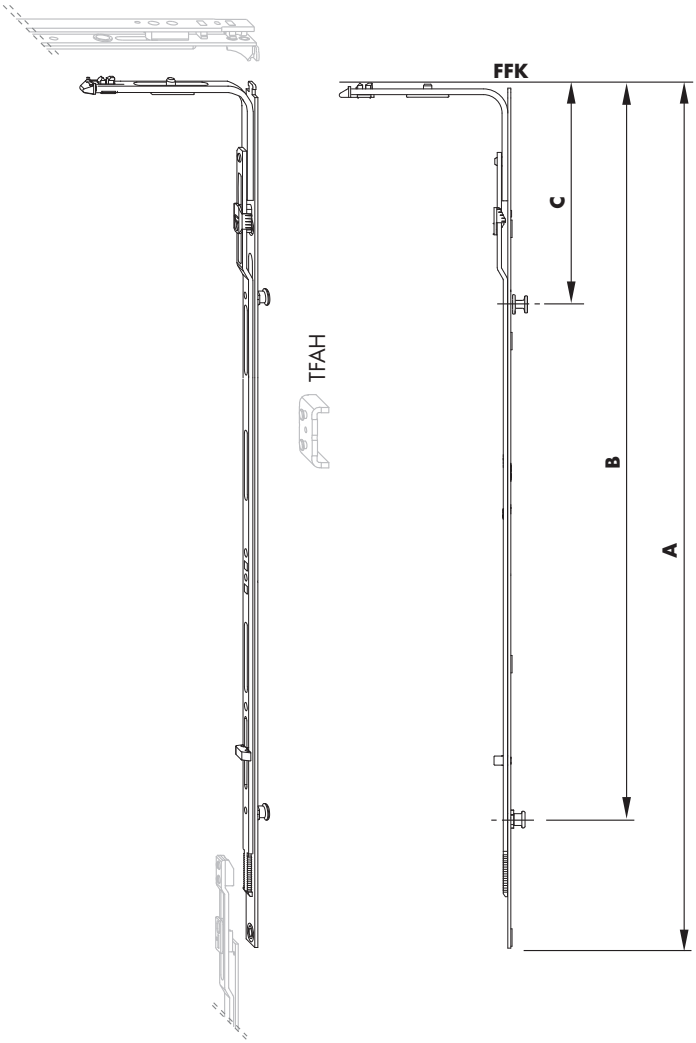

## Sales information

| Description | Part number | Surface | Colour | Box quantity |
|---|---|---|---|---|
| corn.drive BS/K3 sz 1+ 2RS | TEUL2380-10001_ | Titan Silver | without | 1 pc |
| | TEUL2380-10004_ | Titan Silver | without | 25 pcs |
| | TEUL2380-10008_ | Titan Silver | without | 500 pcs |
| | TEUL2380-10048_ | Titan Silver | without | 600 pcs |
| corn.drive BS/K3 sz 2+ 2RS | TEUL2390-10001_ | Titan Silver | without | 1 pc |
| | TEUL2390-10004_ | Titan Silver | without | 25 pcs |
| | TEUL2390-10008_ | Titan Silver | without | 500 pcs |
| | TEUL2390-10047_ | Titan Silver | without | 500 pcs |

## Technical information

| Part number | Description | Dimensions (mm) | | | |
|---|---|---|---|---|---|
| | | A | B | | |
| TEUL2400-... | corn.drive BSO/K3+ 1RS | 261 | 140 | 1 | 3 |

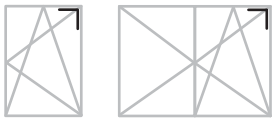

- For installation on welded sashes
- Coupling location to slide underneath
- For RC2 anti-lift device (TFAH) required, refer to the PDB
- The range of application conforms to the connecting components



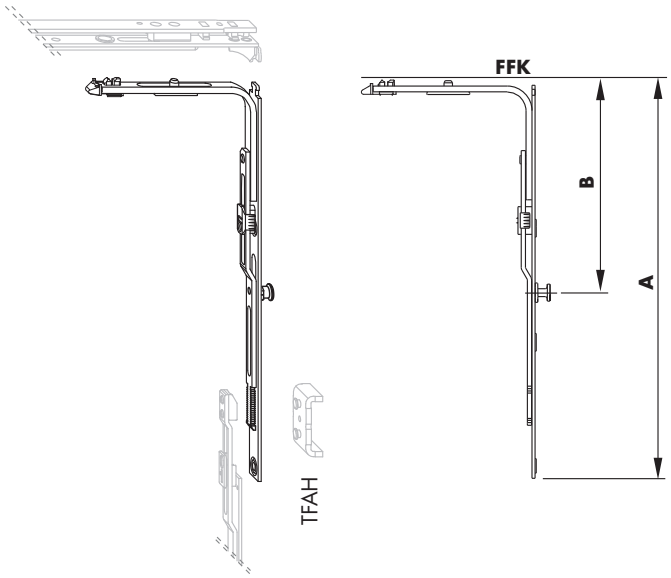


## Sales information

| Description | Part number | Surface | Colour | Box quantity |
|---|---|---|---|---|
| corn.drive BSO/K3+ 1RS | TEUL2400-10001_ | Titan Silver | without | 1 pc |
| | TEUL2400-10005_ | Titan Silver | without | 50 pcs |
| | TEUL2400-10046_ | Titan Silver | without | 300 pcs |

## Technical information

| Part number | Description | Dimensions (mm) | | | |
|---|---|---|---|---|---|
| | | A | B | | |
| TEUL2300-... | corn.drive BSO/A3 1RS | 490 | 140 | 1 | 2 |

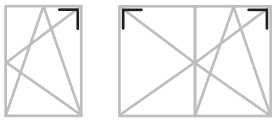

- The range of application conforms to the connecting components



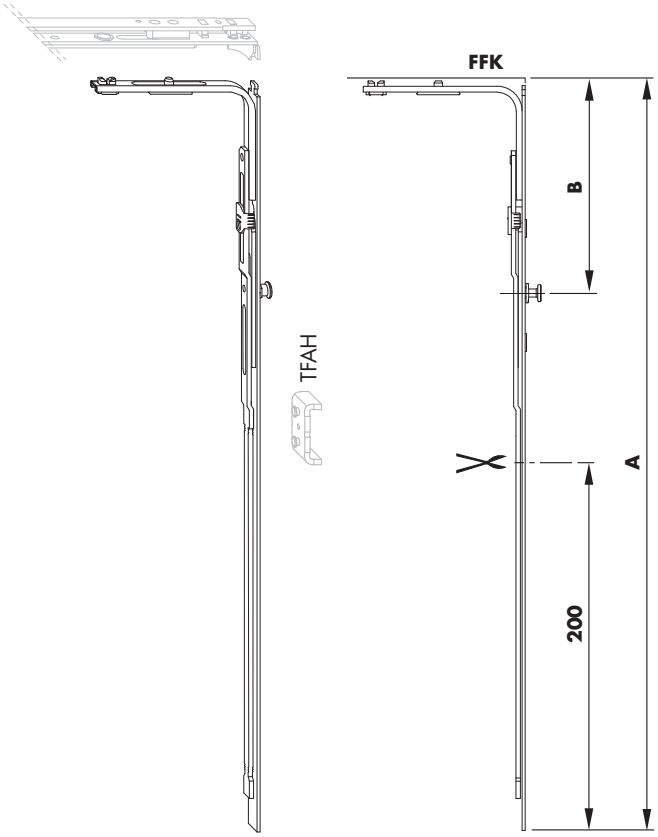


## Sales information

| Description | Part number | Surface | Colour | Box quantity |
|---|---|---|---|---|
| corn.drive BSO/A3 1RS | TEUL2300-10001_ | Titan Silver | without | 1 pc |
| | TEUL2300-10004_ | Titan Silver | without | 25 pcs |

## Technical information

| Part number | Description | Dimensions (mm) | | | Airgap | rebate width | Groove axis | | |
|---|---|---|---|---|---|---|---|---|---|
| | | A | B | C | | | | | |
| TEUL7031-... | corn.drive BSU 1RS H 18-13 rh. | 178 | 110 | 63 | 12/4 | 18 | 13 | 1 | 5 |
| TEUL7032-... | corn.drive BSU 1RS H 18-13 lh. | 178 | 110 | 63 | 12/4 | 18 | 13 | 1 | 5 |
| TEUL7041-... | corn.drive BSU 1RS H 20-13 rh. | 178 | 110 | 63 | 12/4 | 20 | 13 | 1 | 5 |
| TEUL7042-... | corn.drive BSU 1RS H 20-13 lh. | 178 | 110 | 63 | 12/4 | 20 | 13 | 1 | 5 |
| TEUL7011-... | corn.drive BSU 1RS H 18-9 rh. | 178 | 110 | 63 | 12/4 | 18 | 9 | 1 | 5 |
| TEUL7012-... | corn.drive BSU 1RS H 18-9 lh. | 178 | 110 | 63 | 12/4 | 18 | 9 | 1 | 5 |
| TEUL7021-... | corn.drive BSU 1RS H 20-9 rh. | 178 | 110 | 63 | 12/4 | 20 | 9 | 1 | 5 |
| TEUL7022-... | corn.drive BSU 1RS H 20-9 lh. | 178 | 110 | 63 | 12/4 | 20 | 9 | 1 | 5 |
| TKFE7011-... | cover cap FEB rh. | - | - | - | - | - | - | - | - |
| TKFE7012-... | cover cap FEB lh. | - | - | - | - | - | - | - | - |



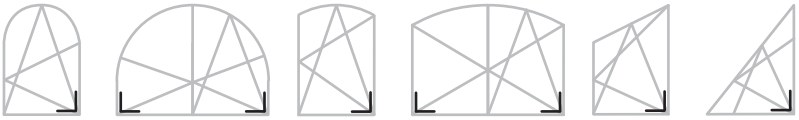

- For alternative colours of cover caps, see ‘Cover Caps’ page
- **Please observe:**
  Guidelines/notes on the product and on liability (VHBH directive as well as the other applicable documents listed - directive can be downloaded at www.beschlagindustrie.de/ggsb/richtlinien.asp )
  Specifications from the profile manufacturers/system owners (PVC, light metal) or DIN 68 121 “Wooden profiles for windows and portal doors”
- For hinge side TITAN and Si-line

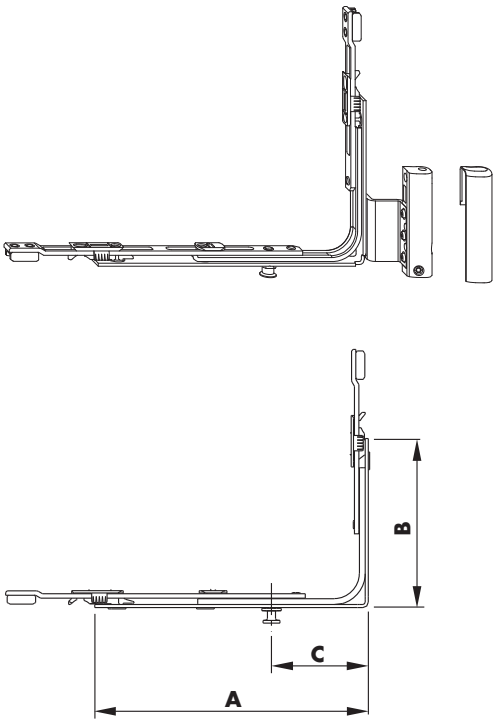

## Sales information

| Description | Part number | Surface | Colour | Box quantity |
|---|---|---|---|---|
| corn.drive BSU 1RS H 18-13 rh. | TEUL7031-10001_ | Titan Silver | without | 1 pc |
| | TEUL7031-10004_ | Titan Silver | without | 25 pcs |
| corn.drive BSU 1RS H 18-13 lh. | TEUL7032-10001_ | Titan Silver | without | 1 pc |
| | TEUL7032-10004_ | Titan Silver | without | 25 pcs |
| corn.drive BSU 1RS H 20-13 rh. | TEUL7041-10001_ | Titan Silver | without | 1 pc |
| | TEUL7041-10004_ | Titan Silver | without | 25 pcs |
| corn.drive BSU 1RS H 20-13 lh. | TEUL7042-10001_ | Titan Silver | without | 1 pc |
| | TEUL7042-10004_ | Titan Silver | without | 25 pcs |
| corn.drive BSU 1RS H 18-9 rh. | TEUL7011-10001_ | Titan Silver | without | 1 pc |
| | TEUL7011-10004_ | Titan Silver | without | 25 pcs |
| corn.drive BSU 1RS H 18-9 lh. | TEUL7012-10001_ | Titan Silver | without | 1 pc |
| | TEUL7012-10004_ | Titan Silver | without | 25 pcs |
| corn.drive BSU 1RS H 20-9 rh. | TEUL7021-10001_ | Titan Silver | without | 1 pc |
| | TEUL7021-10004_ | Titan Silver | without | 25 pcs |
| corn.drive BSU 1RS H 20-9 lh. | TEUL7022-10001_ | Titan Silver | without | 1 pc |
| | TEUL7022-10004_ | Titan Silver | without | 25 pcs |
| cover cap FEB rh. | TKFE7011-00401_ | neutral | RAL9016 | 1 pc |
| | TKFE7011-00406_ | neutral | RAL9016 | 100 pcs |
| | TKFE7011-00408_ | neutral | RAL9016 | 500 pcs |
| cover cap FEB lh. | TKFE7012-00401_ | neutral | RAL9016 | 1 pc |
| | TKFE7012-00406_ | neutral | RAL9016 | 100 pcs |
| | TKFE7012-00408_ | neutral | RAL9016 | 500 pcs |

## Technical information

| Part number | Description | Dimensions (mm) | | | Airgap | rebate width | Groove axis | | |
|---|---|---|---|---|---|---|---|---|---|
| | | A | B | C | | | | | |
| TEUL7051-... | corn.drive BSU 1RS KF/H 12/18-9 A0175 rh. | 178 | 110 | 63 | 12 | 18 | 9 | 1 | 5 |
| TEUL7052-... | corn.drive BSU 1RS KF/H 12/18-9 A0175 lh. | 178 | 110 | 63 | 12 | 18 | 9 | 1 | 5 |
| TEUL7061-... | corn.drive BSU 1RS KF/H 12/20-9 A0175 rh. | 178 | 110 | 63 | 12 | 20 | 9 | 1 | 5 |
| TEUL7062-... | corn.drive BSU 1RS KF/H 12/20-9 A0175 lh. | 178 | 110 | 63 | 12 | 20 | 9 | 1 | 5 |
| TEUL7071-... | corn.drive BSU 1RS KF/H 12/18-13 A0175 rh. | 178 | 110 | 63 | 12 | 18 | 13 | 1 | 5 |
| TEUL7072-... | corn.drive BSU 1RS KF/H 12/18-13 A0175 lh. | 178 | 110 | 63 | 12 | 18 | 13 | 1 | 5 |
| TEUL7081-... | corn.drive BSU 1RS KF/H 12/20-13 A0175 rh. | 178 | 110 | 63 | 12 | 20 | 13 | 1 | 5 |
| TEUL7082-... | corn.drive BSU 1RS KF/H 12/20-13 A0175 lh. | 178 | 110 | 63 | 12 | 20 | 13 | 1 | 5 |
| TKFE7011-... | cover cap FEB rh. | - | - | - | - | - | - | - | - |
| TKFE7012-... | cover cap FEB lh. | - | - | - | - | - | - | - | - |



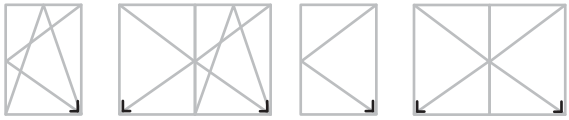

- Hinge clearance in the over rebate
- For alternative colours of cover caps, see ‘Cover Caps’ page

- **Please observe:**
  Guidelines/notes on the product and on liability (VHBH directive as well as the other applicable documents listed - directive can be downloaded at www.beschlagindustrie.de/ggsb/richtlinien.asp )
  Specifications from the profile manufacturers/system owners (PVC, light metal) or DIN 68 121 “Wooden profiles for windows and portal doors”
- For hinge side TITAN and Si-line

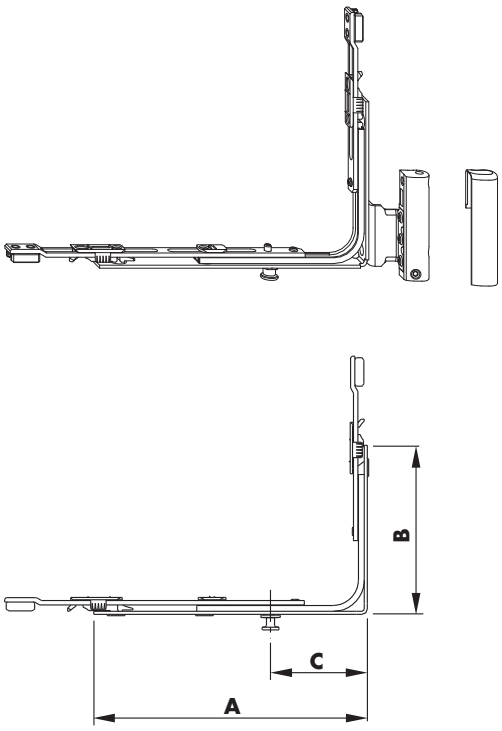

## Sales information

| Description | Part number | Surface | Colour | Box quantity |
|---|---|---|---|---|
| corn.drive BSU 1RS KF/H 12/18-9 A0175 rh. | TEUL7051-10001_ | Titan Silver | without | 1 pc |
| | TEUL7051-10004_ | Titan Silver | without | 25 pcs |
| corn.drive BSU 1RS KF/H 12/18-9 A0175 lh. | TEUL7052-10001_ | Titan Silver | without | 1 pc |
| | TEUL7052-10004_ | Titan Silver | without | 25 pcs |
| corn.drive BSU 1RS KF/H 12/20-9 A0175 rh. | TEUL7061-10001_ | Titan Silver | without | 1 pc |
| | TEUL7061-10004_ | Titan Silver | without | 25 pcs |
| corn.drive BSU 1RS KF/H 12/20-9 A0175 lh. | TEUL7062-10001_ | Titan Silver | without | 1 pc |
| | TEUL7062-10004_ | Titan Silver | without | 25 pcs |
| corn.drive BSU 1RS KF/H 12/18-13 A0175 rh. | TEUL7071-10001_ | Titan Silver | without | 1 pc |
| | TEUL7071-10004_ | Titan Silver | without | 25 pcs |
| corn.drive BSU 1RS KF/H 12/18-13 A0175 lh. | TEUL7072-10001_ | Titan Silver | without | 1 pc |
| | TEUL7072-10004_ | Titan Silver | without | 25 pcs |
| corn.drive BSU 1RS KF/H 12/20-13 A0175 rh. | TEUL7081-10001_ | Titan Silver | without | 1 pc |
| | TEUL7081-10004_ | Titan Silver | without | 25 pcs |
| corn.drive BSU 1RS KF/H 12/20-13 A0175 lh. | TEUL7082-10001_ | Titan Silver | without | 1 pc |
| | TEUL7082-10004_ | Titan Silver | without | 25 pcs |
| cover cap FEB rh. | TKFE7011-00401_ | neutral | RAL9016 | 1 pc |
| | TKFE7011-00406_ | neutral | RAL9016 | 100 pcs |
| | TKFE7011-00408_ | neutral | RAL9016 | 500 pcs |
| cover cap FEB lh. | TKFE7012-00401_ | neutral | RAL9016 | 1 pc |
| | TKFE7012-00406_ | neutral | RAL9016 | 100 pcs |
| | TKFE7012-00408_ | neutral | RAL9016 | 500 pcs |

## Technical information

| Part number | Description | Dimensions (mm) | | | | |
|---|---|---|---|---|---|---|
| | | A | B | C | | |
| TEUL3200-... | corn.driveBSU 1RS | 178 | 110 | 63 | 1 | 3 |

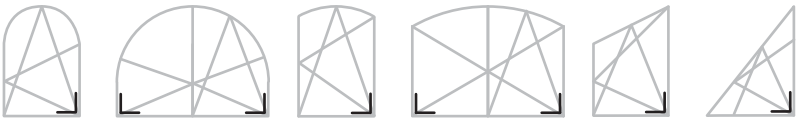

- The range of application conforms to the connecting components
- Applicable with corner hinge to be drilled in

- **Please observe:**
  Guidelines/notes on the product and on liability (VHBH directive as well as the other applicable documents listed - directive can be downloaded at www.beschlagindustrie.de/ggsb/richtlinien.asp )
  Specifications from the profile manufacturers/system owners (PVC, light metal) or DIN 68 121 “Wooden profiles for windows and portal doors”



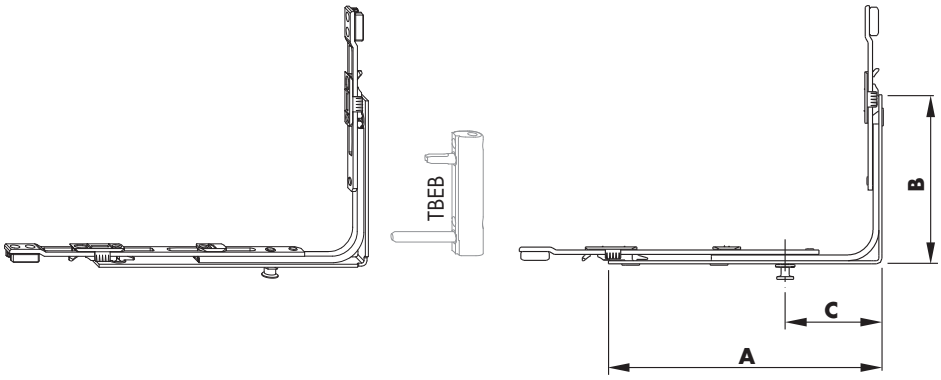


## Sales information

| Description | Part number | Surface | Colour | Box quantity |
|---|---|---|---|---|
| corn.driveBSU 1RS | TEUL3200-10001_ | Titan Silver | without | 1 pc |
| | TEUL3200-10004_ | Titan Silver | without | 25 pcs |

| Description | Material | Page |
|---|---|---|
| locking bolt VS/A | TESC0230 | 2.2 - 2 |
| locking bolt AF VS 180° 1RS | TESC2020 | 2.2 - 4 |
| locking bolt AF VSO 90° 1RS | TESC2010 | 2.2 - 5 |
| locking bolt AF VSO RSA | TESC2030, TESC2040 | 2.2 - 6 |
| locking bolt AF/RSA 14 DF | TESC2090 | 2.2 - 7 |
| locking bolt AF VSO/S RB | TESC3070 | 2.2 - 8 |
| locking bolt AF VSO/S RB 1RS | TESC3060 | 2.2 - 9 |
| locking bolt VSO-DS | 703274 | 2.2 - 10 |
| locking bolt AF VSU/K | TESC3010 | 2.2 - 11 |
| locking bolt AF VSU/K 1RS | TESC3020 | 2.2 - 12 |
| locking bolt AF VSU/K SB | TESC3140 | 2.2 - 13 |
| locking bolt AF VSU/G RSA | TESC3050, TESC3080, TESC3120 | 2.2 - 14 |
| locking bolt AF DEF | TESC3030, TESC3040 | 2.2 - 15 |
| tilt lock bearing AF/FH | TEKB1130, TFFH0151, TFFH0152 | 2.2 - 16 |
| locking part VSU FH A0102 | TEVR1070 | 2.2 - 17 |
| locking part VSU/A FH | TEVR1010 | 2.2 - 18 |
| locking part VSU/A FG | TEVR1060 | 2.2 - 20 |
| locking part VSU/K+ FH | TEVR1400 | 2.2 - 22 |
| locking part VSU/K FG | TEVR1180 | 2.2 - 23 |
| locking part VSU/K FG A0273 | TEVR1570 | 2.2 - 24 |
| locking part VSU/K 56+ 1S 1RS | TEVR1340 | 2.2 - 25 |
| locking part VSU/K 56+ FH FBS | TEVR1511, TEVR1512, TEVR1521, TEVR1522 | 2.2 - 26 |
| locking part VSU/K 1S A0273 | TEVR1380 | 2.2 - 27 |
| locking part VSU/K FH 1S A0273 | TEVR1540 | 2.2 - 28 |
| locking part SE VSU/K+ 1S | TEVR1550 | 2.2 - 29 |
| locking part AF VSU/A FH RB | TEVR1080 | 2.2 - 30 |
| locking part VSU/A DEF | TEVR1110 | 2.2 - 32 |
| locking part FPS/A | TEVR0380 | 2.2 - 34 |

## Technical information

| Part number | Description | Dimensions (mm) | | | |
|---|---|---|---|---|---|
| | | A | B | | |
| TESC0230-... | locking bolt VS/A 1RS | 412 | 63 | 1 | 2 |

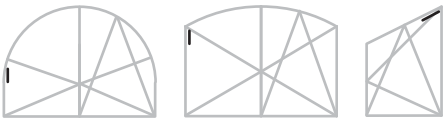

- The range of application conforms to the connecting components



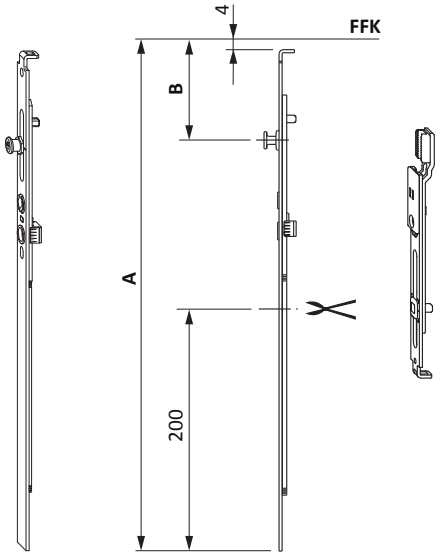


## Sales information

| Description | Part number | Surface | Colour | Box quantity |
|---|---|---|---|---|
| locking bolt VS/A 1RS | TESC0230-10001_ | Titan Silver | without | 1 pc |
| | TESC0230-10004_ | Titan Silver | without | 25 pcs |

## Installation advice

- Cropping situation TITAN AF

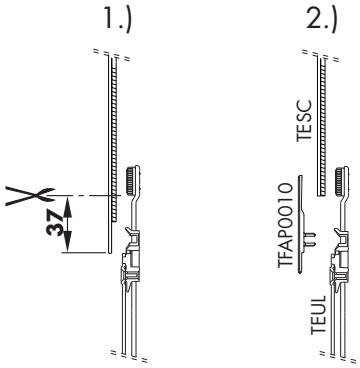

## Technical information

| Part number | Description | Dimensions (mm) | | | |
|---|---|---|---|---|---|
| | | A | B | | |
| TESC2020-... | locking bolt AF VS 180° 1RS | 140 | 63 | 1 | 3 |

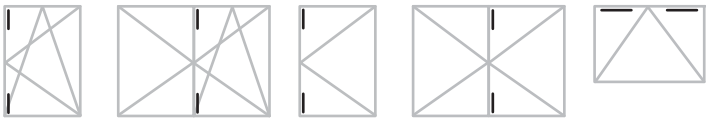

- The range of application conforms to the connecting components



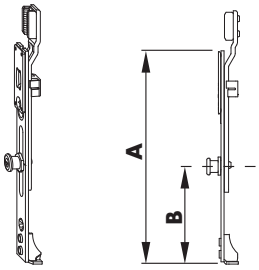


## Sales information

| Description | Part number | Surface | Colour | Box quantity |
|---|---|---|---|---|
| locking bolt AF VS 180° 1RS | TESC2020-10001_ | Titan Silver | without | 1 pc |
| | TESC2020-10004_ | Titan Silver | without | 25 pcs |

## Technical information

| Part number | Description | Dimensions (mm) | | | |
|---|---|---|---|---|---|
| | | A | B | | |
| TESC2010-... | locking bolt AF tilt 90° 1RS | 140 | 81 | 1 | 3 |

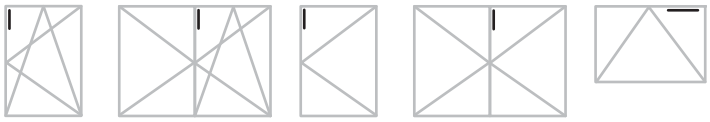

- The range of application conforms to the connecting components



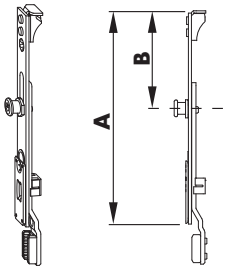


## Sales information

| Description | Part number | Surface | Colour | Box quantity |
|---|---|---|---|---|
| locking bolt AF tilt 90° 1RS | TESC2010-10001_ | Titan Silver | without | 1 pc |
| | TESC2010-10004_ | Titan Silver | without | 25 pcs |

## Technical information

| Part number | Description | Dimensions (mm) | | | |
|---|---|---|---|---|---|
| | | A | B | | |
| TESC2030-... | locking bolt AF VSO RSA 11 | 140 | 11 | 1 | 3 |
| TESC2040-... | locking bolt AF VSO RSA 14 | 140 | 14 | 1 | 3 |

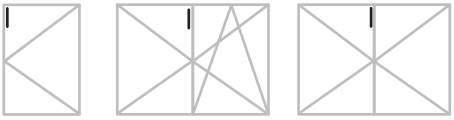

- For basic security
- Refer to the PDB for matching strikers
- The range of application conforms to the connecting components



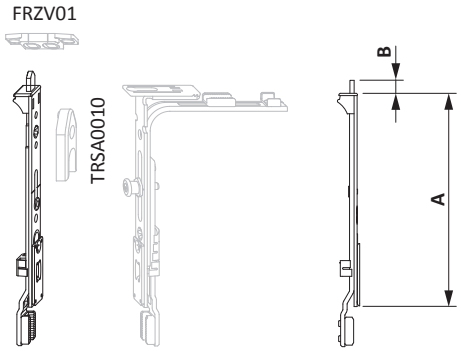


## Sales information

| Description | Part number | Surface | Colour | Box quantity |
|---|---|---|---|---|
| locking bolt AF VSO RSA 11 | TESC2030-10001_ | Titan Silver | without | 1 pc |
| | TESC2030-10004_ | Titan Silver | without | 25 pcs |
| locking bolt AF VSO RSA 14 | TESC2040-10001_ | Titan Silver | without | 1 pc |
| | TESC2040-10004_ | Titan Silver | without | 25 pcs |

## Technical information

| Part number | Description | Dimensions (mm) | | | |
|---|---|---|---|---|---|
| | | A | B | | |
| TESC2090-... | locking bolt AF/RSA 14 DF | 140 | 63 | 2 | 3 |

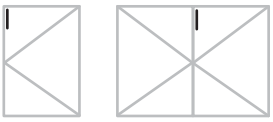

- For basic security
- Refer to the PDB for matching strikers
- The range of application conforms to the connecting components



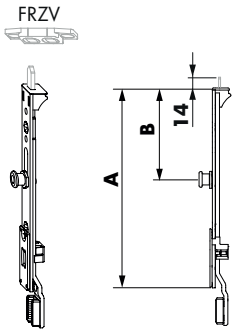


## Sales information

| Description | Part number | Surface | Colour | Box quantity |
|---|---|---|---|---|
| locking bolt AF/RSA 14 DF | TESC2090-10001_ | Titan Silver | without | 1 pc |
| | TESC2090-10005_ | Titan Silver | without | 50 pcs |

## Technical information

| Part number | Description | Dimensions (mm) | | | |
|---|---|---|---|---|---|
| | | A | C | | |
| TESC3070-... | locking bolt AF VSO RB | 246 | 56 | 0 | 4 |

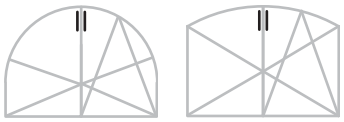

- Dimension C = Marking for the start of the arch
- The range of application conforms to the connecting components



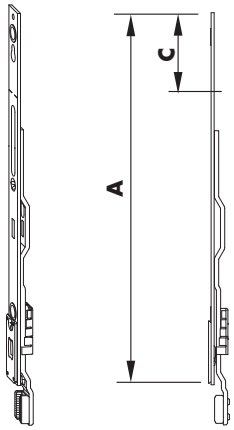


## Sales information

| Description | Part number | Surface | Colour | Box quantity |
|---|---|---|---|---|
| locking bolt AF VSO RB | TESC3070-10001_ | Titan Silver | without | 1 pc |
| | TESC3070-10004_ | Titan Silver | without | 25 pcs |

## Technical information

| Part number | Description | Dimensions (mm) | | | | |
|---|---|---|---|---|---|---|
| | | A | B | C | | |
| TESC3060-... | locking bolt AF VSO RB 1RS | 246 | 86 | 56 | 1 | 4 |

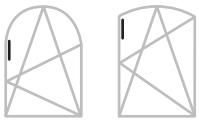

- Dimension C = Marking for the start of the arch
- The range of application conforms to the connecting components



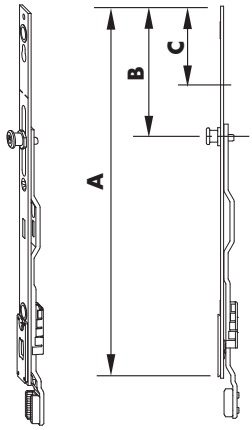


## Sales information

| Description | Part number | Surface | Colour | Box quantity |
|---|---|---|---|---|
| locking bolt AF VSO RB 1RS | TESC3060-10001_ | Titan Silver | without | 1 pc |
| | TESC3060-10004_ | Titan Silver | without | 25 pcs |

## Technical information

| Part number | Description | Dimensions (mm) | | |
|---|---|---|---|---|
| | | A | B | |
| 703274 | locking bolt VSO-DS | 140 | 37 | 3 |

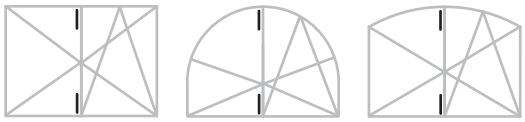

- For basic security
- 11 mm deadbolt throw
- Can be used in the secondary sash with groove ../8x4
- Refer to the PDB for matching strikers
- The range of application conforms to the connecting components



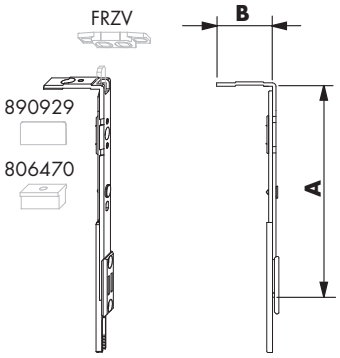


## Sales information

| Description | Part number | Surface | Colour | Box quantity |
|---|---|---|---|---|
| locking bolt VSO-DS | 703274 | Titan Silver | without | 1 pc |
| | 279076 | Titan Silver | without | 50 pcs |

## Technical information

| Part number | Description | Dimensions (mm)<br>A | | |
|---|---|---|---|---|
| TESC3010-... | locking bolt AF VSU/K | 140 | 0 | 2 |

- Applicable on basic security and RC1
- The range of application conforms to the connecting components



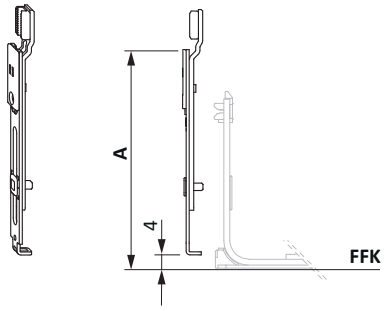


## Sales information

| Description | Part number | Surface | Colour | Box quantity |
|---|---|---|---|---|
| locking bolt AF VSU/K | TESC3010-10001_ | Titan Silver | without | 1 pc |
| | TESC3010-10004_ | Titan Silver | without | 25 pcs |

## Technical information

| Part number | Description | Dimensions (mm) | | | |
|---|---|---|---|---|---|
| | | A | B | | |
| TESC3020-... | locking bolt AF VSU/K 1RS | 140 | 65 | 1 | 2 |

- For RC2
- The range of application conforms to the connecting components



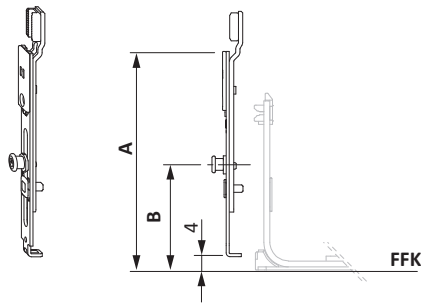


## Sales information

| Description | Part number | Surface | Colour | Box quantity |
|---|---|---|---|---|
| locking bolt AF VSU/K 1RS | TESC3020-10001_ | Titan Silver | without | 1 pc |
| | TESC3020-10004_ | Titan Silver | without | 25 pcs |

## Technical information

| Part number | Description | Dimensions (mm)<br>A | | |
|---|---|---|---|---|
| TESC3140-... | locking bolt AF VSU/K SB | 140 | 0 | 2 |

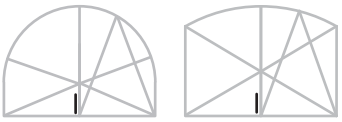

- The range of application conforms to the connecting components



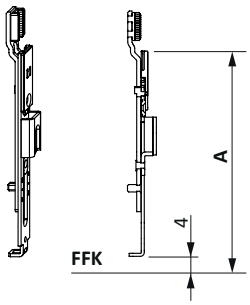


## Sales information

| Description | Part number | Surface | Colour | Box quantity |
|---|---|---|---|---|
| locking bolt AF VSU/K SB | TESC3140-10001_ | Titan Silver | without | 1 pc |
| | TESC3140-10004_ | Titan Silver | without | 25 pcs |

## Technical information

| Part number | Description | Dimensions (mm) | | | | |
|---|---|---|---|---|---|---|
| | | A | B | C | | |
| TESC3050-... | locking bolt AF VSU/G RSA 11 | 140 | 11 | 6,80 | 1 | 2 |
| TESC3080-... | locking bolt AF VSU/G RSA 14 | 140 | 14 | 6,80 | 1 | 2 |
| TESC3120-... | locking bolt AF VSU/G RSA 20 | 140 | 20 | 9,20 | 1 | 2 |

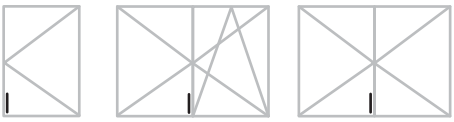

- For basic security
- Reverse-action
- Refer to the PDB for matching strikers
- The range of application conforms to the connecting components



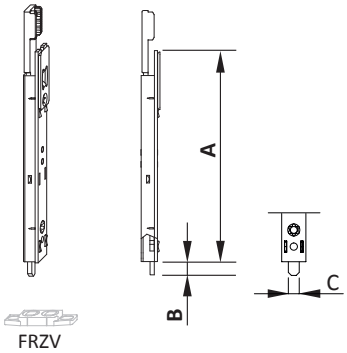


## Sales information

| Description | Part number | Surface | Colour | Box quantity |
|---|---|---|---|---|
| locking bolt AF VSU/G RSA 11 | TESC3050-10001_ | Titan Silver | without | 1 pc |
| | TESC3050-10004_ | Titan Silver | without | 25 pcs |
| locking bolt AF VSU/G RSA 14 | TESC3080-10001_ | Titan Silver | without | 1 pc |
| | TESC3080-10004_ | Titan Silver | without | 25 pcs |
| locking bolt AF VSU/G RSA 20 | TESC3120-10001_ | Titan Silver | without | 1 pc |
| | TESC3120-10004_ | Titan Silver | without | 25 pcs |

## Technical information

| Part number | Description | Dimensions (mm) | | | |
|---|---|---|---|---|---|
| | | A | B | | |
| TESC3030-... | locking bolt AF DEF | 131 | - | 0 | 2 |
| TESC3040-... | locking bolt AF DEF 1RS | 131 | 76 | 1 | 2 |

- Applicable on basic security and RC1
- The range of application conforms to the connecting components
- * Bag of accessories DEF refer to assembly accessories



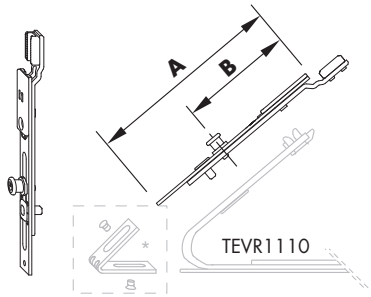


## Sales information

| Description | Part number | Surface | Colour | Box quantity |
|---|---|---|---|---|
| locking bolt AF DEF | TESC3030-10001_ | Titan Silver | without | 1 pc |
| | TESC3030-10004_ | Titan Silver | without | 25 pcs |
| locking bolt AF DEF 1RS | TESC3040-10001_ | Titan Silver | without | 1 pc |
| | TESC3040-10004_ | Titan Silver | without | 25 pcs |

## Technical information

| Part number | Description | FFH | Dimensions (mm) | | | |
|---|---|---|---|---|---|---|
| | | | A | B | | |
| TEKB1130-... | tilt lock element AF/FH | 460 - 3000 | 140 | 65 | 1 | 3 |
| TFFH0151-... | sash lift KRB .. rh. | - | - | - | - | - |
| TFFH0152-... | sash lift KRB .. lh. | - | - | - | - | - |

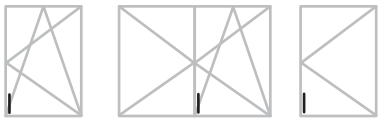

- To be used with tilt strike (vertical tilt point)
- With built in mishandling device in tilt position
- With striker packer for TFFH sash lifter
- Can be coupled with BS corner drive

2.2

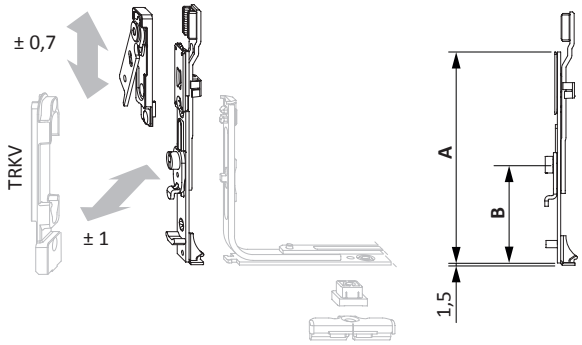


## Sales information

| Description | Part number | Surface | Colour | Box quantity |
|---|---|---|---|---|
| tilt lock element AF/FH | TEKB1130-10001_ | Titan Silver | without | 1 pc |
| | TEKB1130-10004_ | Titan Silver | without | 25 pcs |
| sash lift KRB .. rh. | TFFH0151-10001_ | Titan Silver | without | 1 pc |
| | TFFH0151-10005_ | Titan Silver | without | 50 pcs |
| sash lift KRB .. lh. | TFFH0152-10001_ | Titan Silver | without | 1 pc |
| | TFFH0152-10005_ | Titan Silver | without | 50 pcs |

## Technical information

| Part number | Description | Dimensions (mm) | | | |
|---|---|---|---|---|---|
| | | A | B | | |
| TEVR1070-... | locking part VSU FH 1S A0102 | 130 | 63 | 1 | 2 |

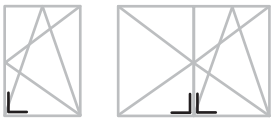

- For basic security
- Bottom horizontal component cannot be coupled
- Tilt lock bearing S-ES (SL-S) FH profile-related, refer to PDB line item FRKA (FRKJ)
- The range of application conforms to the connecting components



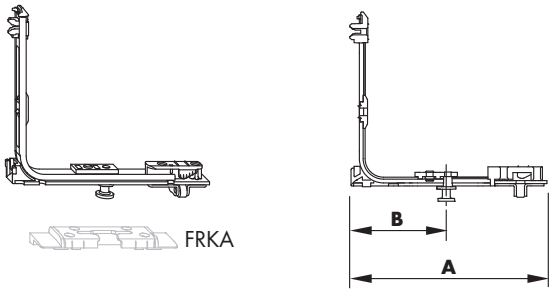


## Sales information

| Description | Part number | Surface | Colour | Box quantity |
|---|---|---|---|---|
| locking part VSU FH 1S A0102 | TEVR1070-10001_ | Titan Silver | without | 1 pc |
| | TEVR1070-10004_ | Titan Silver | without | 25 pcs |

## Technical information

| Part number | Description | Dimensions (mm) | | | | |
|---|---|---|---|---|---|---|
| | | A | B | C | | |
| TEVR1010-... | locking part VSU/A FH 1S | 412 | 63 | 202 | 1 | 2 |

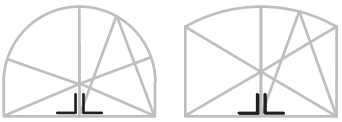

- With preassembled sash lift
- Tilt lock bearing S-ES (SL-S) FH profile-related, refer to PDB line item FRKA (FRKJ)
- The range of application conforms to the connecting components
- Note:
  An additional screw is required in addition to the stated required quantity, as a further hole is created during cropping.



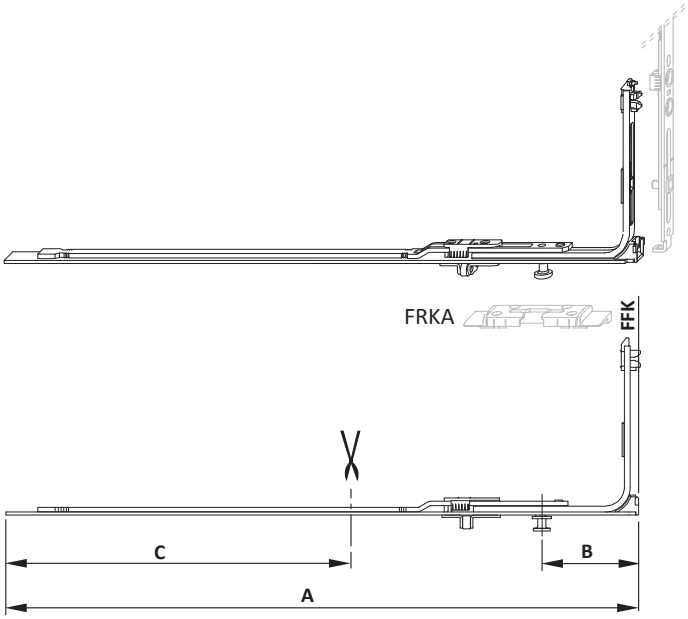


## Sales information

| Description | Part number | Surface | Colour | Box quantity |
|---|---|---|---|---|
| locking part VSU/A FH 1S | TEVR1010-10001_ | Titan Silver | without | 1 pc |
| | TEVR1010-10005_ | Titan Silver | without | 50 pcs |

## Installation advice

- Cropping situation TITAN AF

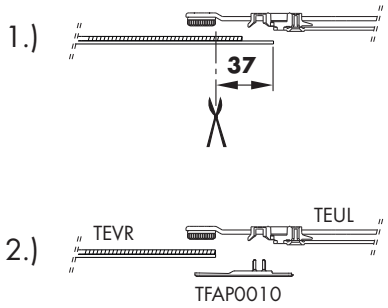

## Technical information

| Part number | Description | Dimensions (mm) | | | | |
|---|---|---|---|---|---|---|
| | | A | B | C | | |
| TEVR1060-... | locking part VSU/A FG 1S | 412 | 63 | 202 | 1 | 2 |

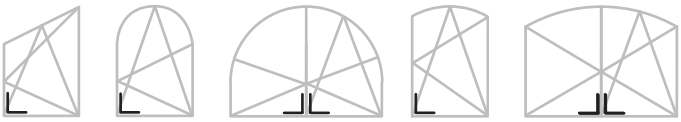

- With preassembled sash lift
- Tilt lock bearing S-ES (SL-S) FH profile-related, refer to PDB line item FRKA (FRKJ)
- The range of application conforms to the connecting components
- Note:
  An additional screw is required in addition to the stated required quantity, as a further hole is created during cropping.



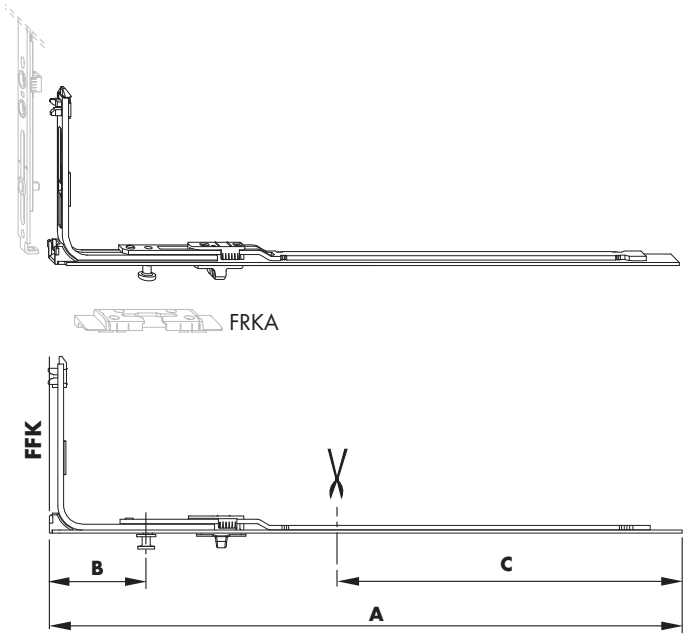


## Sales information

| Description | Part number | Surface | Colour | Box quantity |
|---|---|---|---|---|
| locking part VSU/A FG 1S | TEVR1060-10001_ | Titan Silver | without | 1 pc |
| | TEVR1060-10005_ | Titan Silver | without | 50 pcs |

## Installation advice

- Cropping situation TITAN AF

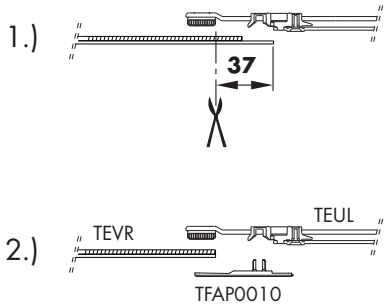

## Technical information

| Part number | Description | Dimensions (mm) | | | |
|---|---|---|---|---|---|
| | | A | B | | |
| TEVR1400-... | locking part VSU/K FH+ 1S | 210 | 63 | 1 | 3 |

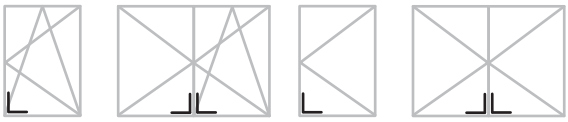

- Coupling location to slide underneath
- With preassembled sash lift
- Tilt lock bearing S-ES (SL-S) FH profile-related, refer to PDB line item FRKA (FRKJ)
- The range of application conforms to the connecting components



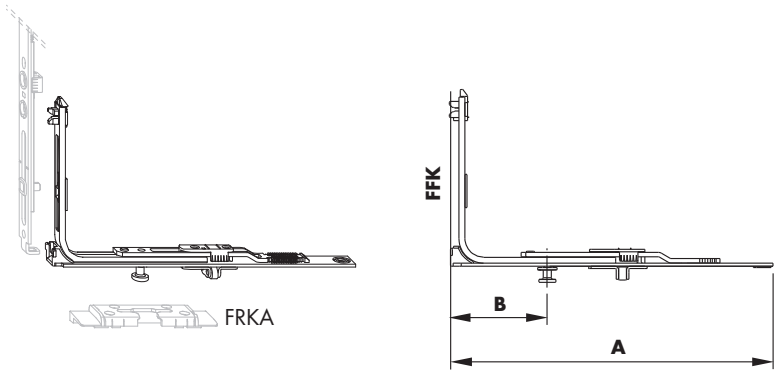


## Sales information

| Description | Part number | Surface | Colour | Box quantity |
|---|---|---|---|---|
| locking part VSU/K FH+ 1S | TEVR1400-10001_ | Titan Silver | without | 1 pc |
| | TEVR1400-10005_ | Titan Silver | without | 50 pcs |
| | TEVR1400-10029_ | Titan Silver | without | 1000 pcs |

## Technical information

| Part number | Description | Dimensions (mm) | | | |
|---|---|---|---|---|---|
| | | A | B | | |
| TEVR1180-... | locking part VSU/K FG 1S | 210 | 63 | 1 | 3 |

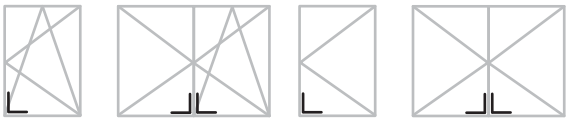

- With preassembled sash lift
- Tilt lock bearing S-ES (SL-S) FH profile-related, refer to PDB line item FRKA (FRKJ)
- The range of application conforms to the connecting components



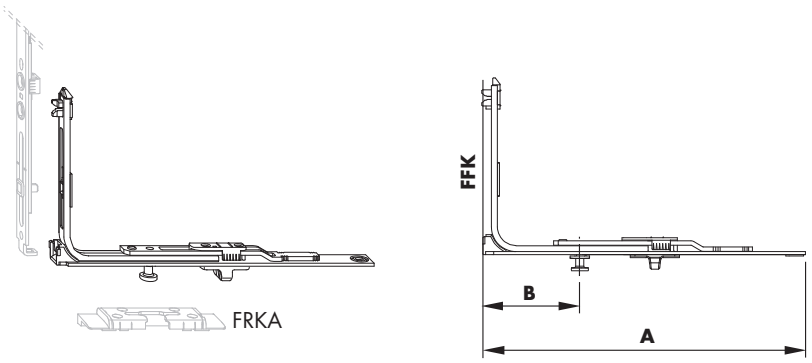


## Sales information

| Description | Part number | Surface | Colour | Box quantity |
|---|---|---|---|---|
| locking part VSU/K FG 1S | TEVR1180-10001_ | Titan Silver | without | 1 pc |
| | TEVR1180-10005_ | Titan Silver | without | 50 pcs |

## Technical information

| Part number | Description | Dimensions (mm) | | | |
|---|---|---|---|---|---|
| | | A | B | | |
| TEVR1570-... | locking part VSU/K FG 1S A0273 | 210 | 63 | 1 | 3 |

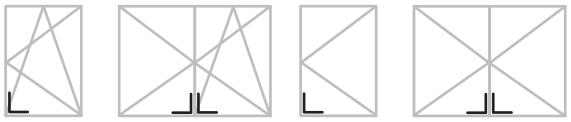

- For basic security
- With extended S-ES cam for thresholds with 10 mm airgap
- In conjunction with the tilt lock bearing SL-S FH, refer to the PDB
- The range of application conforms to the connecting components



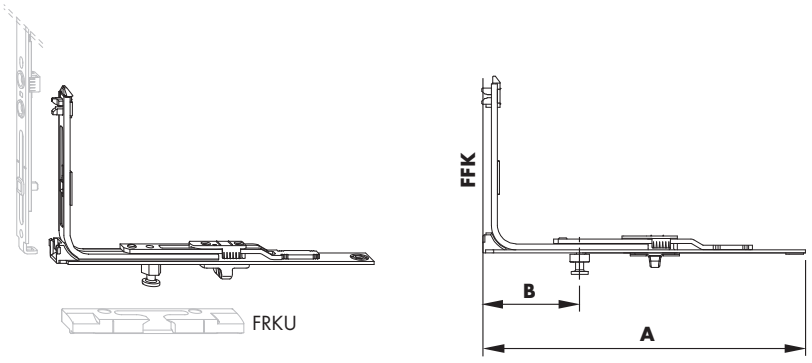


## Sales information

| Description | Part number | Surface | Colour | Box quantity |
|---|---|---|---|---|
| locking part VSU/K FG 1S A0273 | TEVR1570-10001_ | Titan Silver | without | 1 pc |
| | TEVR1570-10004_ | Titan Silver | without | 25 pcs |

## Technical information

| Part number | Description | Dimensions (mm) | | | | |
|---|---|---|---|---|---|---|
| | | A | B | C | | |
| TEVR1340-... | locking part VSU/K 56+ 1S 1RS | 210 | 64 | 73,50 | 2 | 2 |

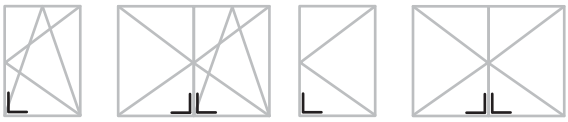

- For installation on welded sashes
- Coupling location to slide underneath
- Run-up plate FH profile-related, refer to PDB line item TRAL01
- The range of application conforms to the connecting components



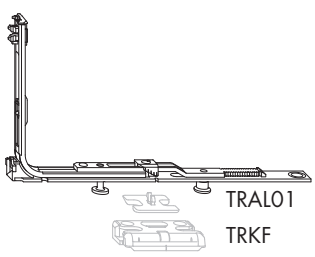


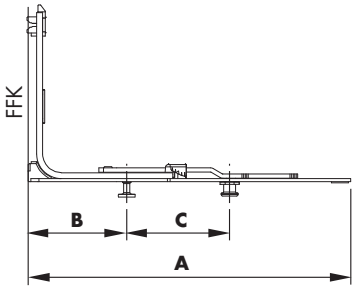


## Sales information

| Description | Part number | Surface | Colour | Box quantity |
|---|---|---|---|---|
| locking part VSU/K 56+ 1S 1RS | TEVR1340-10001_ | Titan Silver | without | 1 pc |
| | TEVR1340-10005_ | Titan Silver | without | 50 pcs |
| | TEVR1340-10050_ | Titan Silver | without | 1200 pcs |

## Technical information

| Part number | Description | Dimensions (mm) | | Groove axis | | |
|---|---|---|---|---|---|---|
| | | A | B | | | |
| TEVR1511-... | lock.part VSU/K 56+FBSFH 1S1RS 13 rh. | 210 | 64 | 13 | 2 | 2 |
| TEVR1512-... | lock.part VSU/K 56+FBSFH 1S1RS 13 lh. | 210 | 64 | 13 | 2 | 2 |
| TEVR1521-... | lock.part VSU/K56+FBS-HFH1S1RS 9 rh. | 210 | 64 | 9 | 2 | 2 |
| TEVR1522-... | lock.part VSU/K56+FBS-HFH1S1RS 9 lh. | 210 | 64 | 9 | 2 | 2 |

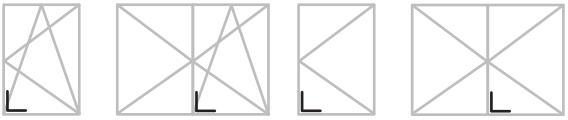



- Coupling location to slide underneath
- For installation on welded sashes
- Tilt lock bearing 56 S(L)-RS profile-related, refer to PDB line item TRKF
- The range of application conforms to the connecting components

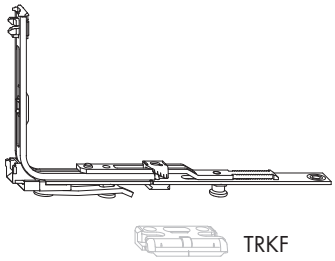


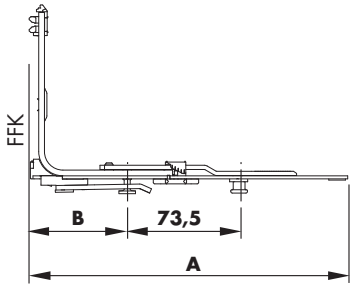


## Sales information

| Description | Part number | Surface | Colour | Box quantity |
|---|---|---|---|---|
| lock.part VSU/K 56+FBSFH 1S1RS 13 rh. | TEVR1511-10001_ | Titan Silver | without | 1 pc |
| | TEVR1511-10005_ | Titan Silver | without | 50 pcs |
| | TEVR1511-10029_ | Titan Silver | without | 1000 pcs |
| | TEVR1511-10050_ | Titan Silver | without | 1200 pcs |
| lock.part VSU/K 56+FBSFH 1S1RS 13 lh. | TEVR1512-10001_ | Titan Silver | without | 1 pc |
| | TEVR1512-10005_ | Titan Silver | without | 50 pcs |
| | TEVR1512-10029_ | Titan Silver | without | 1000 pcs |
| | TEVR1512-10050_ | Titan Silver | without | 1200 pcs |
| lock.part VSU/K56+FBS-HFH1S1RS 9 rh. | TEVR1521-10001_ | Titan Silver | without | 1 pc |
| | TEVR1521-10005_ | Titan Silver | without | 50 pcs |
| lock.part VSU/K56+FBS-HFH1S1RS 9 lh. | TEVR1522-10001_ | Titan Silver | without | 1 pc |
| | TEVR1522-10005_ | Titan Silver | without | 50 pcs |

## Technical information

| Part number | Description | Dimensions (mm) | | | |
|---|---|---|---|---|---|
| | | A | B | | |
| TEVR1380-... | locking part VSU/K 1S A0273 | 210 | 63 | 1 | 3 |

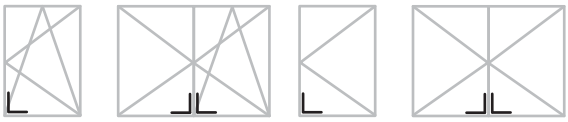

- For basic security
- For installation on welded sashes
- In conjunction with/combined with locking bolt AF VSU/K TESC3010
- With extended S-ES cam for thresholds with 10 mm airgap
- In conjunction with the tilt lock bearing SL-S FH, refer to the PDB
- The range of application conforms to the connecting components



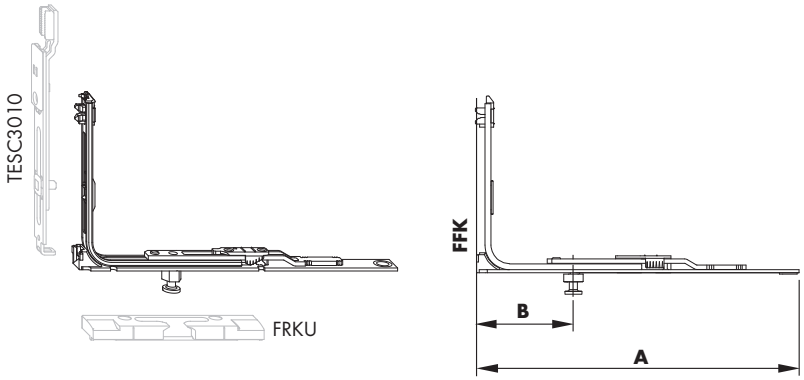


## Sales information

| Description | Part number | Surface | Colour | Box quantity |
|---|---|---|---|---|
| locking part VSU/K 1S A0273 | TEVR1380-10001_ | Titan Silver | without | 1 pc |
| | TEVR1380-10004_ | Titan Silver | without | 25 pcs |

## Technical information

| Part number | Description | Dimensions (mm) | | | |
|---|---|---|---|---|---|
| | | A | B | | |
| TEVR1540-... | locking part VSU/K FH 1S A0273 | 210 | 63 | 1 | 3 |

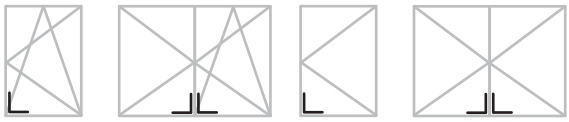

- For basic security
- In conjunction with/combined with locking bolt AF VSU/K TESC3010
- With extended S-ES cam for thresholds with 10 mm airgap
- In conjunction with the tilt lock bearing SL-S FH, refer to the PDB
- The range of application conforms to the connecting components



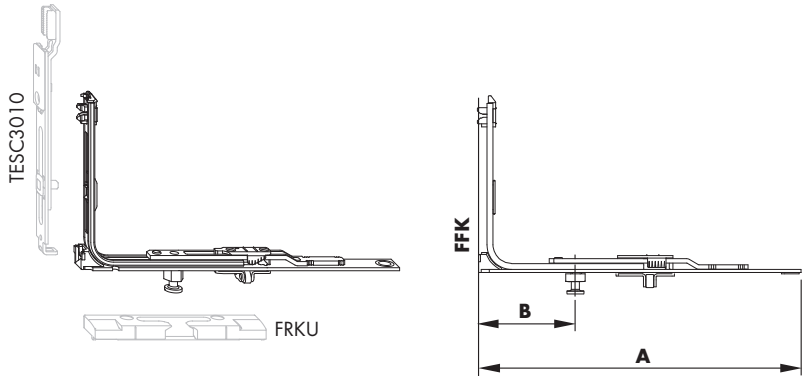


## Sales information

| Description | Part number | Surface | Colour | Box quantity |
|---|---|---|---|---|
| locking part VSU/K FH 1S A0273 | TEVR1540-10001_ | Titan Silver | without | 1 pc |
| | TEVR1540-10004_ | Titan Silver | without | 25 pcs |

## Technical information

| Part number | Description | Dimensions (mm) A | | |
|---|---|---|---|---|
| TEVR1550-... | locking part SE VSU/K 56+ 1S | 210 | 1 | 2 |

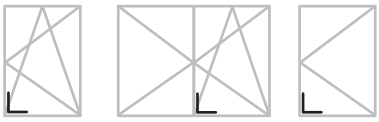

- Switching function TBT = TILT BEFORE TURN
- Tilt lock bearing S-ES FH TBT profile-related, refer to PDB line item FRKB
- The range of application conforms to the connecting components



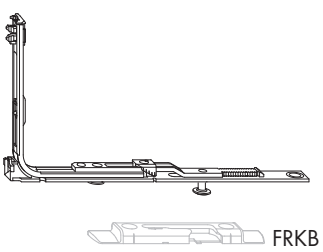


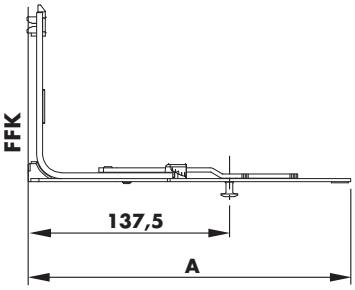


## Sales information

| Description | Part number | Surface | Colour | Box quantity |
|---|---|---|---|---|
| locking part SE VSU/K 56+ 1S | TEVR1550-10001_ | Titan Silver | without | 1 pc |
| | TEVR1550-10005_ | Titan Silver | without | 50 pcs |

## Technical information

| Part number | Description | Dimensions (mm) | | | | |
|---|---|---|---|---|---|---|
| | | A | B | C | | |
| TEVR1080-... | lock.part AF VSU/A FH RB 1S | 422 | 63 | 202 | 1 | 2 |

- With preassembled sash lift
- Tilt lock bearing S-ES (SL-S) FH profile-related, refer to PDB line item FRKA (FRKJ)
- Packer refer to PDB line item FRUP02
- The range of application conforms to the connecting components



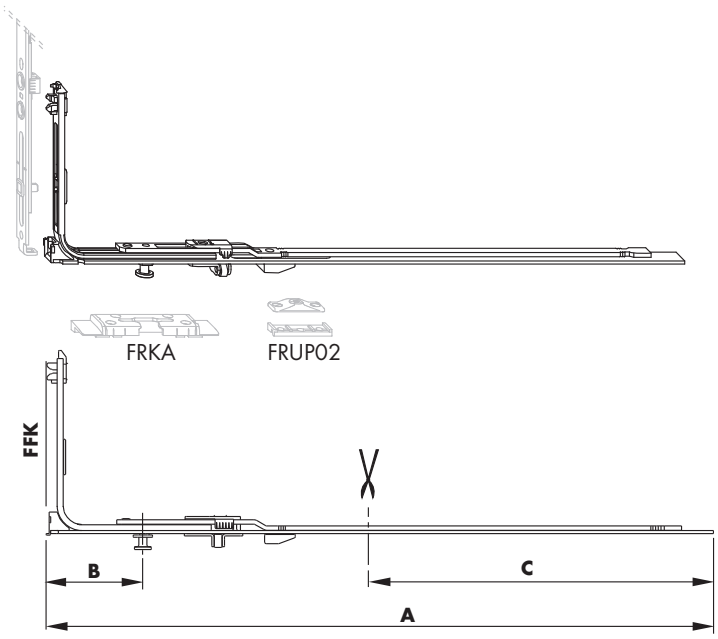


## Sales information

| Description | Part number | Surface | Colour | Box quantity |
|---|---|---|---|---|
| lock.part AF VSU/A FH RB 1S | TEVR1080-10001_ | Titan Silver | without | 1 pc |
| | TEVR1080-10005_ | Titan Silver | without | 50 pcs |

## Installation advice

- Cropping situation TITAN AF

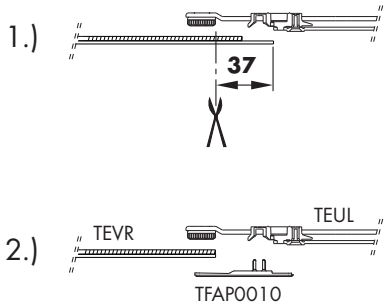

## Technical information

| Part number | Description | Dimensions (mm) | | | | |
|---|---|---|---|---|---|---|
| | | A | B | C | | |
| TEVR1110-... | locking part VSU/A DEF 1S | 462 | 161 | 202 | 1 | 2 |

- Applicable on basic security and RC1
- Tilt lock bearing S-ES (SL-S) FH profile-related, refer to PDB line item FRKA (FRKJ)
- Packer refer to PDB line item FRUP02
- The range of application conforms to the connecting components
- * Bag of accessories DEF refer to assembly accessories



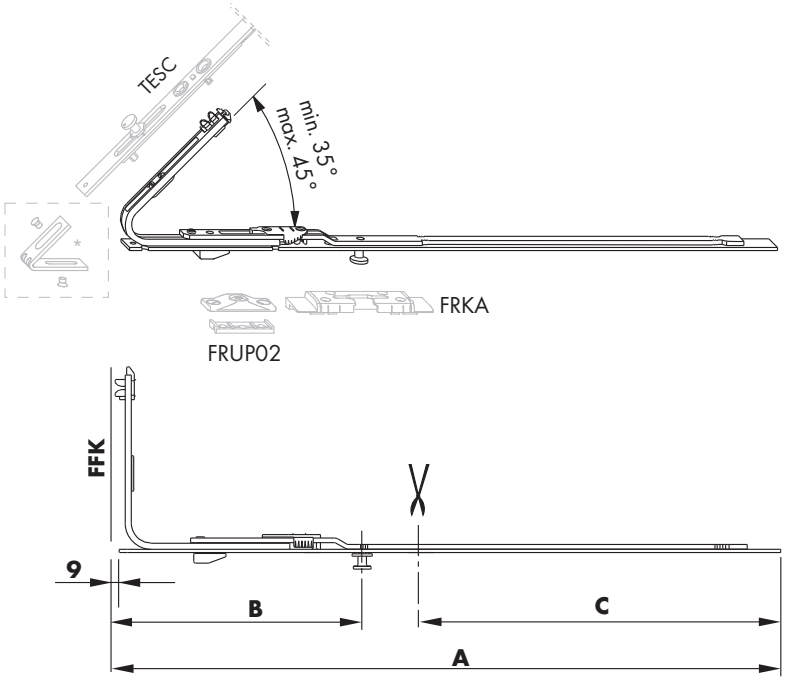


## Sales information

| Description | Part number | Surface | Colour | Box quantity |
|---|---|---|---|---|
| locking part VSU/A DEF 1S | TEVR1110-10001_ | Titan Silver | without | 1 pc |
| | TEVR1110-10004_ | Titan Silver | without | 25 pcs |

## Installation advice

- Cropping situation TITAN AF

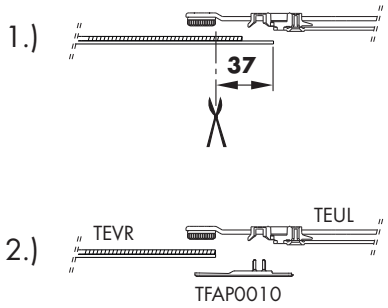

## Technical information

| Part number | Description | Dimensions (mm) | | | | |
|---|---|---|---|---|---|---|
| | | A | B | C | | |
| TEVR0380-... | locking part FPS/A 1RS | 600 | 63 | 144 | 2 | 4 |

- Can be used in combination with ASFP tilt-only safety stay
- For high tilt sashes with rebate heights from 800mm
- The range of application conforms to the connecting components



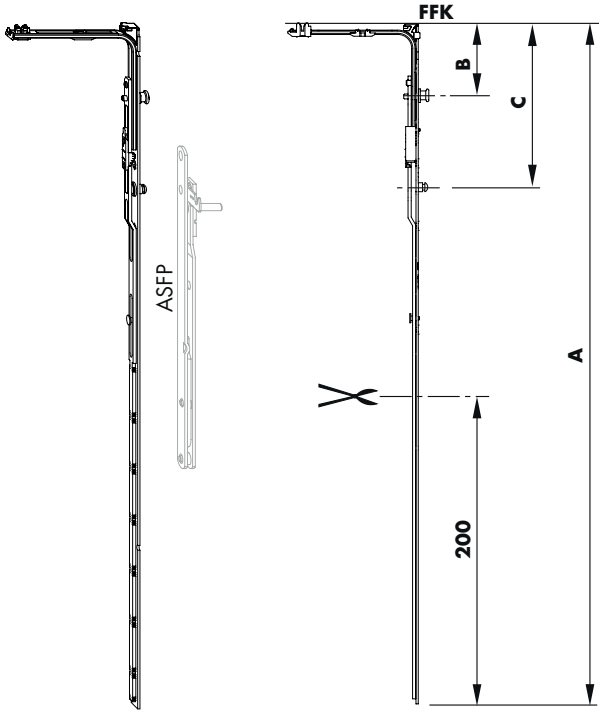


## Sales information

| Description | Part number | Surface | Colour | Box quantity |
|---|---|---|---|---|
| locking part FPS/A 1RS | TEVR0380-10001_ | Titan Silver | without | 1 pc |
| | TEVR0380-10004_ | Titan Silver | without | 25 pcs |

| Description | Material | Page |
|---|---|---|
| Drill holes and routing | | 3.1 - 2 |
| Application matrix:<br>gear 15 AF, handle height constant | | 3.1 - 3 |
| Application matrix:<br>gear 15 AF, handle height constant, locking distance 700 mm | | 3.1 - 5 |
| gear 15 GK | TGKK3010 | 3.1 - 7 |
| gear 15 GK FH FBS | TGKK3100 | 3.1 - 8 |
| gear 15 AF GK | TGKK4030, TGKK4040, TGKK4050, TGKK4060, TGKK4070, TGKK4080, TGKK4280, TGKK4220, TGKK4110 | 3.1 - 9 |
| gear 15 AF GK 700 | TGKK4030, TGKK4040, TGKK4050, TGKK4060, TGKK4070, TGKK4200, TGKK4280, TGKK4220, TGKK4230, TGKK4240 | 3.1 - 11 |
| gear 15 AF GK | TGKK4250, TGKK4260, TGKK4120, TGKK4270, TGKK4130, TGKK4140, TGKK4150, TGKK4160, TGKK4170, TGKK4180, TGKK4190 | 3.1 - 13 |
| Application matrix:<br>gear 15 AF, handle height centre/variable | | 3.1 - 15 |
| Application matrix:<br>gear 15 AF, handle height centre/variable, locking distance 700 mm | | 3.1 - 17 |
| gear 15 AF GM | TGMK4010, TGMK4020, TGMK4030, TGMK4040, TGMK4050, TGMK4160, TGMK4170, TGMK4080 | 3.1 - 19 |
| gear 15 AF GM 700 | TGMK4010, TGMK4020,TGMK4030, TGMK4040, TGMK4160, TGMK4170, TGMK4110 | 3.1 - 21 |
| Application matrix:<br>gear 15 AF OZ, handle height constant | | 3.1 - 23 |
| gear 15 sz 30/G180 GK | TGKK3010 | 3.1 - 25 |
| gear 15 AF OZ GK | TGKK9100, TGKK9110, TGKK9120, TGKK9130, TGKK9170, TGKK9180, TGKK9160 | 3.1 - 26 |
| Application matrix:<br>gear 15 AF OZ, handle height centre/variable | | 3.1 - 28 |
| gear 15 AF OZ GM | TGMK9080, TGMK9090, TGMK9120, TGMK9110 | 3.1 - 30 |

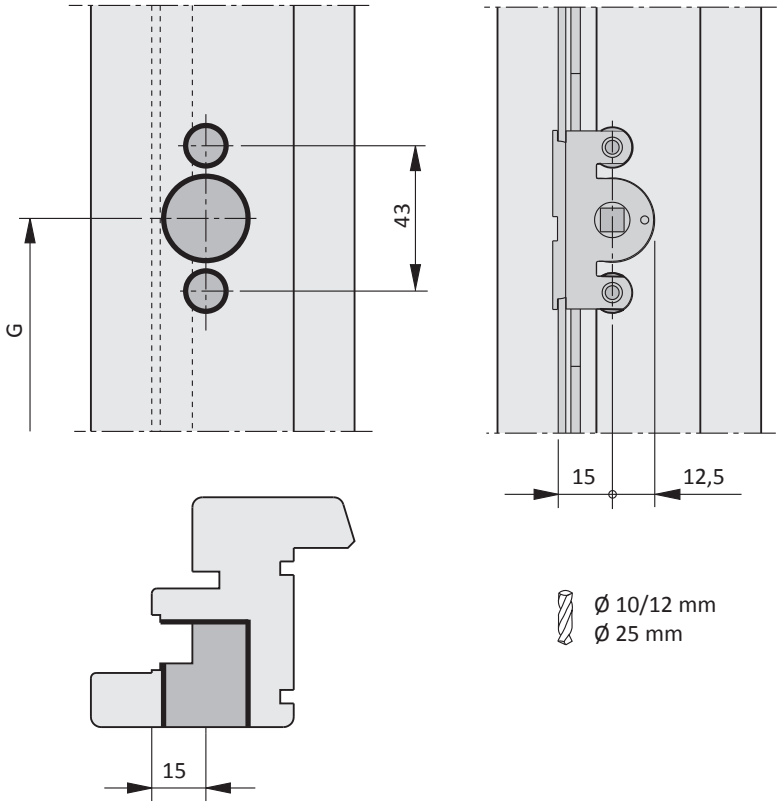
43
G
15
12,5
15
Ø 10/12 mm
Ø 25 mm



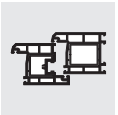

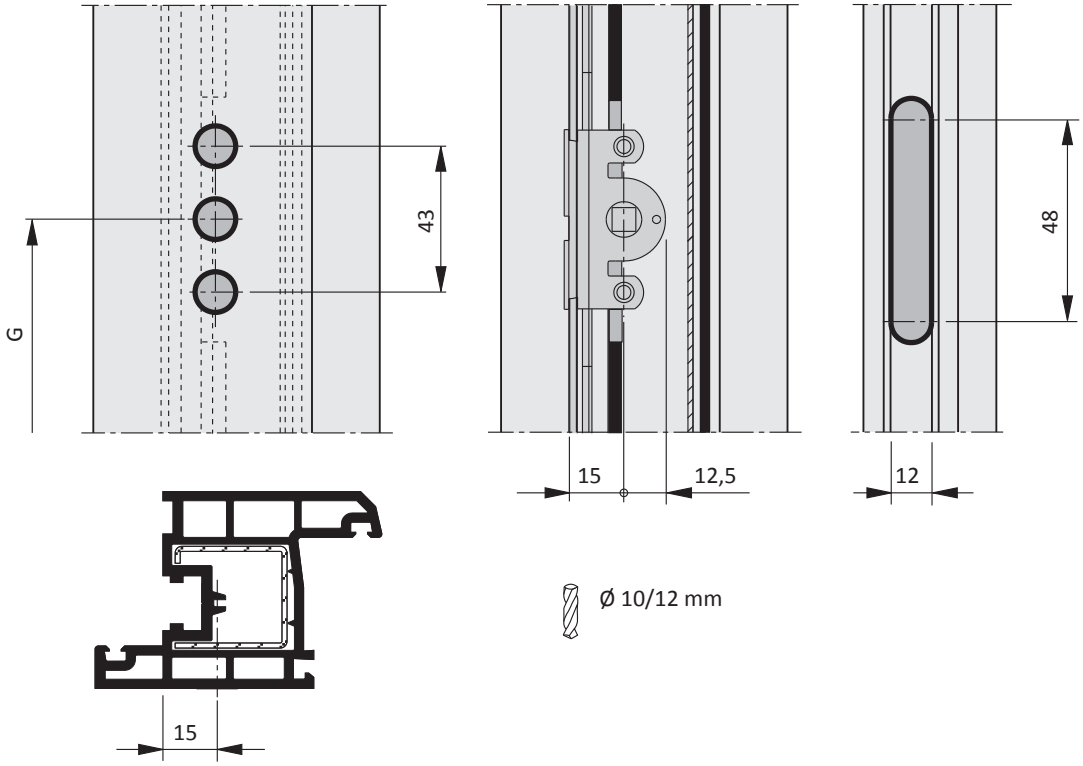
43
G
15
12,5
48
12
Ø 10/12 mm
15

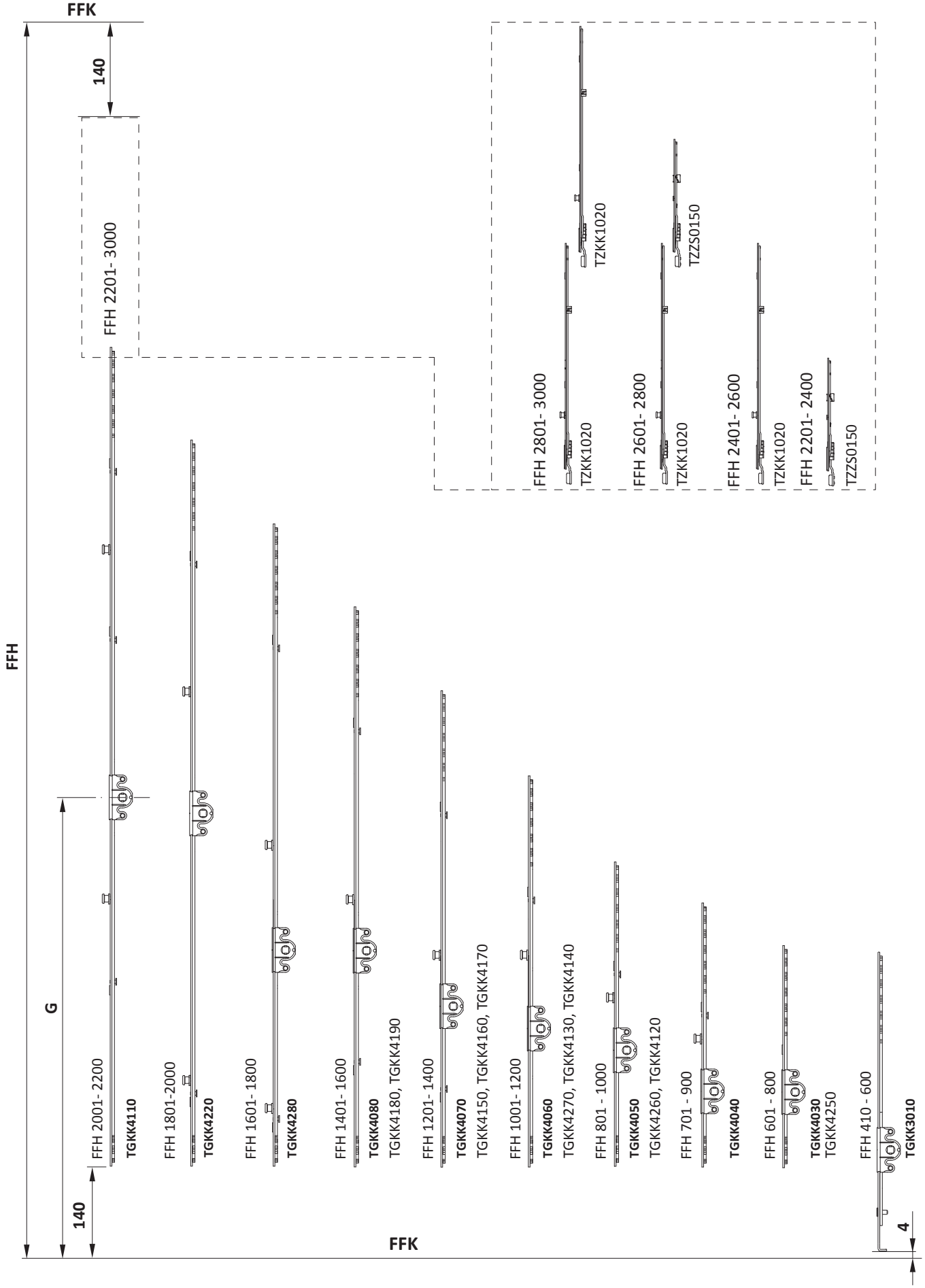
FFK
140
FFH
G
140
FFK
4
FFH 2201- 3000
FFH 2001- 2200
TGKK4110
FFH 1801-2000
TGKK4220
FFH 1601- 1800
TGKK4280
FFH 1401- 1600
TGKK4080
TGKK4180, TGKK4190
FFH 1201- 1400
TGKK4070
TGKK4150, TGKK4160, TGKK4170
FFH 1001- 1200
TGKK4060
TGKK4270, TGKK4130, TGKK4140
FFH 801 - 1000
TGKK4050
TGKK4260, TGKK4120
FFH 701 - 900
TGKK4040
FFH 601 - 800
TGKK4030
TGKK4250
FFH 410 - 600
TGKK3010
FFH 2801- 3000
TZKK1020
TZKK1020
FFH 2601- 2800
TZZS0150
TZKK1020
FFH 2401- 2600
TZKK1020
FFH 2201- 2400
TZZS0150

| Material number | Description | Material number | Description | FFH (mm) | G (mm) |
|---|---|---|---|---|---|
| **TGKK3010** | gear 15 sz 30/G180 | | | 410 - 600 | 180 |
| **TGKK4030** | gear 15 AF sz 60/G300 | | | 601 - 800 | 300 |
| TGKK4250 | gear 15 AF sz 60/G250 | | | 601 - 800 | 250 |
| **TGKK4040** | gear 15 AF sz 70/G300 1RS | | | 701 - 900 | 300 |
| **TGKK4050** | gear 15 AF sz 80/G400 1RS | | | 801 - 1000 | 400 |
| TGKK4260 | gear 15 AF sz 80/G250 1RS | | | 801 - 1000 | 250 |
| TGKK4120 | gear 15 AF sz 80/G300 1RS | | | 801 - 1000 | 300 |
| **TGKK4060** | gear 15 AF sz 100/G500 1RS | | | 1001 - 1200 | 500 |
| TGKK4270 | gear 15 AF sz 100/G250 1RS | | | 1001 - 1200 | 250 |
| TGKK4130 | gear 15 AF sz 100/G300 1RS | | | 1001 - 1200 | 300 |
| TGKK4140 | gear 15 AF sz 100/G400 1RS | | | 1001 - 1200 | 400 |
| **TGKK4070** | gear 15 AF sz 120/G600 1RS | | | 1201 - 1400 | 600 |
| TGKK4150 | gear 15 AF sz 120/G300 1RS | | | 1201 - 1400 | 300 |
| TGKK4160 | gear 15 AF sz 120/G400 1RS | | | 1201 - 1400 | 400 |
| TGKK4170 | gear 15 AF sz 120/G500 1RS | | | 1201 - 1400 | 500 |
| **TGKK4080** | gear 15 AF sz 140/G700 1RS | | | 1401 - 1600 | 700 |
| TGKK4180 | gear 15 AF sz 140/G500 1RS | | | 1401 - 1600 | 500 |
| TGKK4190 | gear 15 AF sz 140/G600 1RS | | | 1401 - 1600 | 600 |
| **TGKK4280** | gear 15 AF sz 160/G700 2RS 70 | | | 1601 - 1800 | 700 |
| **TGKK4220** | gear 15 AF sz 180/G1000 2RS 70 | | | 1801 - 2000 | 1000 |
| **TGKK4110** | gear 15 AF sz 200/G1000 2RS | | | 2001 - 2200 | 1000 |
| **TGKK4110** | gear 15 AF sz 200/G1000 2RS | **TZZS0150** | linkage AF sz 1 | 2201 - 2400 | 1000 |
| **TGKK4110** | gear 15 AF sz 200/G1000 2RS | **TZKK1020** | linkage KK/AF sz 2 1RS | 2401 - 2600 | 1000 |
| **TGKK4110** | gear 15 AF sz 200/G1000 2RS | **TZKK1020** | linkage KK/AF sz 2 1RS | 2601 - 2800 | 1000 |
| | | **TZZS0150** | linkage AF sz 1 | | |
| **TGKK4110** | gear 15 AF sz 200/G1000 2RS | **TZKK1020** | linkage KK/AF sz 2 1RS | 2801 - 3000 | 1000 |
| | | **TZKK1020** | linkage KK/AF sz 2 1RS | | |

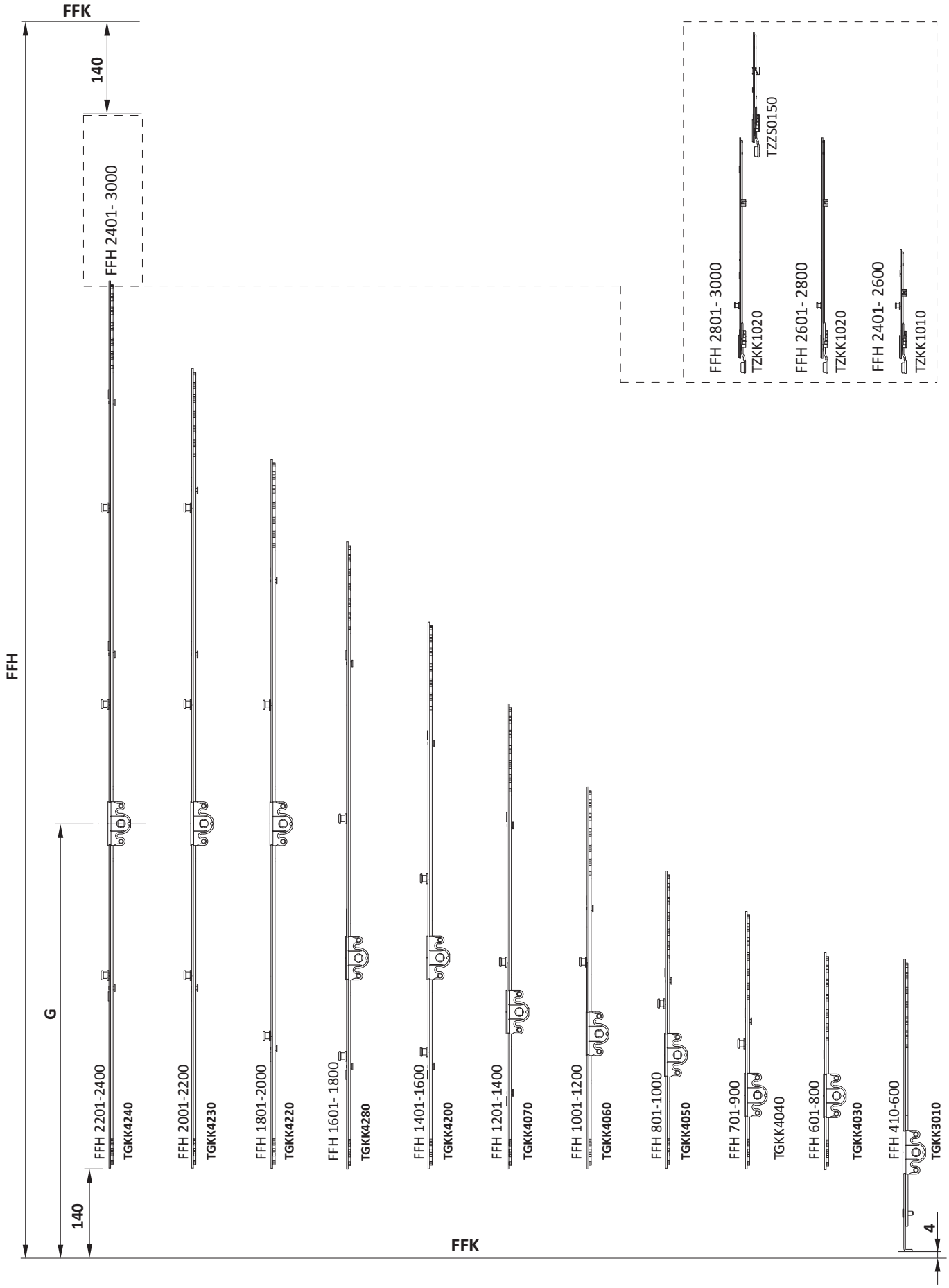
FFK
140
FFH 2401- 3000
FFH 2801- 3000
TZKK1020
TZZS0150
FFH 2601- 2800
TZKK1020
FFH 2401- 2600
TZKK1010
FFH
G
140
FFH 2201-2400
TGKK4240
FFH 2001-2200
TGKK4230
FFH 1801-2000
TGKK4220
FFH 1601- 1800
TGKK4280
FFH 1401-1600
TGKK4200
FFH 1201-1400
TGKK4070
FFH 1001-1200
TGKK4060
FFH 801-1000
TGKK4050
FFH 701-900
TGKK4040
FFH 601-800
TGKK4030
FFH 410-600
TGKK3010
4
FFK

| Material number | Description | Material number | Description | FFH (mm) | G (mm) |
|---|---|---|---|---|---|
| **TGKK3010** | gear 15 sz 30/G180 | | | 410 - 600 | 180 |
| **TGKK4030** | gear 15 AF sz 60/G300 | | | 601 - 800 | 300 |
| TGKK4040 | gear 15 AF sz 70/G300 1RS | | | 701 - 900 | 300 |
| **TGKK4050** | gear 15 AF sz 80/G400 1RS | | | 801 - 1000 | 400 |
| **TGKK4060** | gear 15 AF sz 100/G500 1RS | | | 1001 - 1200 | 500 |
| **TGKK4070** | gear 15 AF sz 120/G600 1RS | | | 1201 - 1400 | 600 |
| **TGKK4200** | gear 15 AF sz 140/G700 2RS 70 | | | 1401 - 1600 | 700 |
| **TGKK4280** | gear 15 AF sz 160/G700 2RS 70 | | | 1601 - 1800 | 700 |
| **TGKK4220** | gear 15 AF sz 180/G1000 2RS 70 | | | 1801 - 2000 | 1000 |
| **TGKK4230** | gear 15 AF sz 200/G1000 3RS 70 | | | 2001 - 2200 | 1000 |
| **TGKK4240** | gear 15 AF sz 220/G1000 3RS 70 | | | 2201 - 2400 | 1000 |
| **TGKK4240** | gear 15 AF sz 220/G1000 3RS 70 | **TZKK1010** | linkage KK/AF sz 1 1RS | 2401 - 2600 | 1000 |
| **TGKK4240** | gear 15 AF sz 220/G1000 3RS 70 | **TZKK1020** | linkage KK/AF sz 2 1RS | 2601 - 2800 | 1000 |
| **TGKK4240** | gear 15 AF sz 220/G1000 2RS | **TZKK1020** | linkage KK/AF sz 2 1RS | 2801 - 3000 | 1000 |
| | | **TZZS0150** | linkage AF sz 1 | | |

## Technical information

| Part number | Description | Dimensions (mm) | | | |
|---|---|---|---|---|---|
| | | G1 | A | | |
| TGKK3010-... | gear 15 sz 30/G180 | 180 | 495 | 0 | 1 |

- Handle height constant
- Suitable for product range TITAN iP and TITAN AF
- TITAN AF FFH (mm)
  with TEUL4020 = 310-410
  with TEUL4010 = 411-600
- When used with TITAN AF the gear must be shortened by 30.5 mm

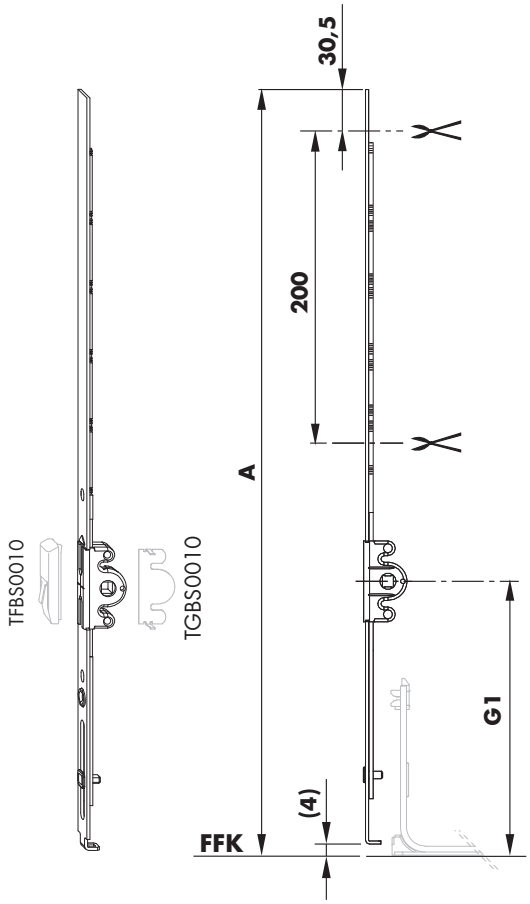


## Sales information

| Description | Part number | Surface | Colour | Box quantity |
|---|---|---|---|---|
| gear 15 sz 30/G180 | TGKK3010-10001_ | Titan Silver | without | 1 pc |
| | TGKK3010-10004_ | Titan Silver | without | 25 pcs |

## Technical information

| Part number | Description | Dimensions (mm) | | | |
|---|---|---|---|---|---|
| | | G1 | A | | |
| TGKK3100-... | gear 15 sz 30/G180 FH FBS | 180 | 495 | 0 | 1 |

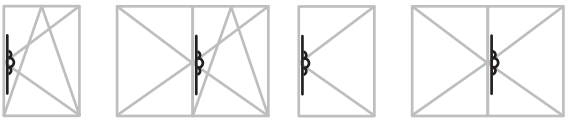

- Handle height constant
- Suitable for product range TITAN iP and TITAN AF
- TITAN AF FFH (mm)
  with TEUL4020 = 310-410
  with TEUL4010 = 411-600
- When used with TITAN AF the gear must be shortened by 30.5 mm
- Run up block for sash lift FBS, refer to PDB line item TRAU

3.1

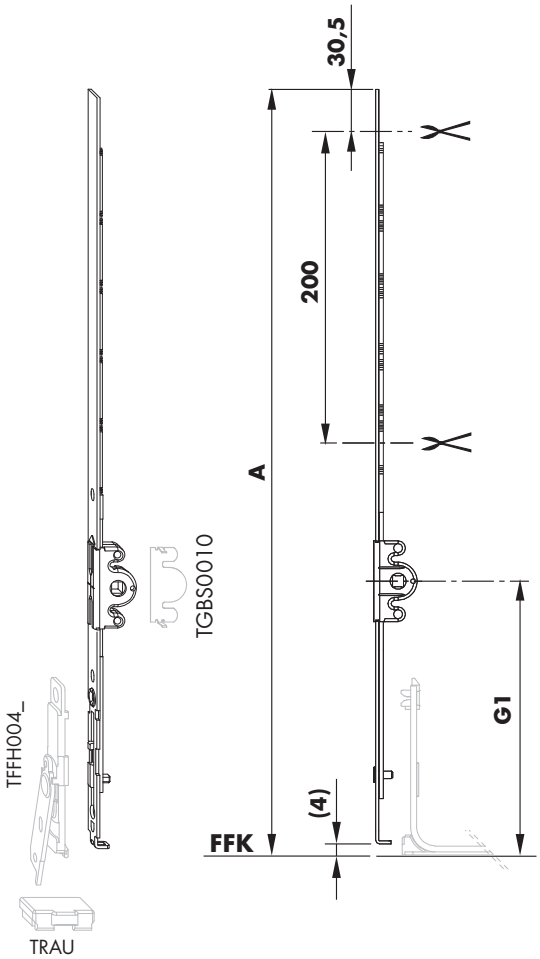


## Sales information

| Description | Part number | Surface | Colour | Box quantity |
|---|---|---|---|---|
| gear 15 sz 30/G180 FH FBS | TGKK3100-10001_ | Titan Silver | without | 1 pc |
| | TGKK3100-10004_ | Titan Silver | without | 25 pcs |

## Technical information

| Part number | Description | FFH | Dimensions (mm) | | | | | |
|---|---|---|---|---|---|---|---|---|
| | | | G1 | A | B | C | | |
| TGKK4030-... | gear 15 AF sz 60/G300 | 601 - 800 | 300 | 520 | - | - | 0 | 2 |
| TGKK4040-... | gear 15 AF sz 70/G300 1RS | - | 300 | 620 | 80 | - | 1 | 2 |
| TGKK4050-... | gear 15 AF sz 80/G400 1RS | - | 400 | 720 | 80 | - | 1 | 3 |
| TGKK4060-... | gear 15 AF sz 100/G500 1RS | - | 500 | 920 | 180 | - | 1 | 4 |
| TGKK4070-... | gear 15 AF sz 120/G600 1RS | - | 600 | 1120 | 80 | - | 1 | 5 |
| TGKK4080-... | gear 15 AF sz 140/G700 1RS | - | 700 | 1320 | 80 | - | 1 | 6 |
| TGKK4280-... | gear 15 AF sz 160/G700 2RS 70 | - | 700 | 1520 | 380 | 320 | 2 | 7 |
| TGKK4220-... | gear 15 AF sz 180/G1000 2RS 70 | - | 1000 | 1720 | 280 | 420 | 2 | 8 |
| TGKK4110-... | gear 15 AF sz 200/G1000 2RS | - | 1000 | 1920 | 580 | 220 | 2 | 9 |

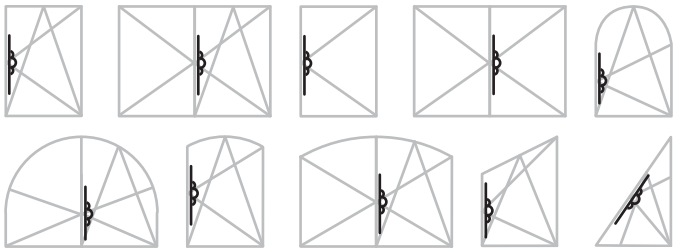

- Handle height constant

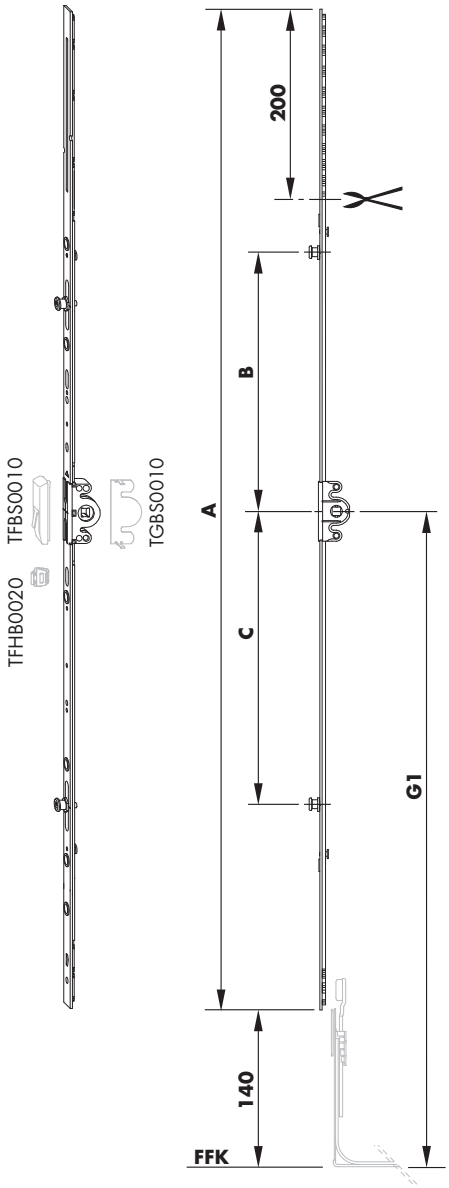

## Sales information

| Description | Part number | Surface | Colour | Box quantity |
|---|---|---|---|---|
| gear 15 AF sz 60/G300 | TGKK4030-10001_ | Titan Silver | without | 1 pc |
| | TGKK4030-10004_ | Titan Silver | without | 25 pcs |
| gear 15 AF sz 70/G300 1RS | TGKK4040-10001_ | Titan Silver | without | 1 pc |
| | TGKK4040-10004_ | Titan Silver | without | 25 pcs |
| gear 15 AF sz 80/G400 1RS | TGKK4050-10001_ | Titan Silver | without | 1 pc |
| | TGKK4050-10004_ | Titan Silver | without | 25 pcs |
| | TGKK4050-10022_ | Titan Silver | without | 400 pcs |
| gear 15 AF sz 100/G500 1RS | TGKK4060-10001_ | Titan Silver | without | 1 pc |
| | TGKK4060-10004_ | Titan Silver | without | 25 pcs |
| | TGKK4060-10022_ | Titan Silver | without | 400 pcs |
| gear 15 AF sz 120/G600 1RS | TGKK4070-10001_ | Titan Silver | without | 1 pc |
| | TGKK4070-10004_ | Titan Silver | without | 25 pcs |
| | TGKK4070-10022_ | Titan Silver | without | 400 pcs |
| gear 15 AF sz 140/G700 1RS | TGKK4080-10001_ | Titan Silver | without | 1 pc |
| | TGKK4080-10004_ | Titan Silver | without | 25 pcs |
| | TGKK4080-10007_ | Titan Silver | without | 250 pcs |
| gear 15 AF sz 160/G700 2RS 70 | TGKK4280-10001_ | Titan Silver | without | 1 pc |
| | TGKK4280-10004_ | Titan Silver | without | 25 pcs |
| gear 15 AF sz 180/G1000 2RS 70 | TGKK4220-10001_ | Titan Silver | without | 1 pc |
| | TGKK4220-10002_ | Titan Silver | without | 10 pcs |
| gear 15 AF sz 200/G1000 2RS | TGKK4110-10001_ | Titan Silver | without | 1 pc |
| | TGKK4110-10002_ | Titan Silver | without | 10 pcs |

## Technical information

| Part number | Description | FFH | Dimensions (mm) | | | | | | |
|---|---|---|---|---|---|---|---|---|---|
| | | | G1 | A | B | C | D | | |
| TGKK4030-... | gear 15 AF sz 60/G300 | 601 - 800 | 300 | 520 | - | - | - | 0 | 2 |
| TGKK4040-... | gear 15 AF sz 70/G300 1RS | - | 300 | 620 | 80 | - | - | 1 | 2 |
| TGKK4050-... | gear 15 AF sz 80/G400 1RS | - | 400 | 720 | 80 | - | - | 1 | 3 |
| TGKK4060-... | gear 15 AF sz 100/G500 1RS | - | 500 | 920 | 180 | - | - | 1 | 4 |
| TGKK4070-... | gear 15 AF sz 120/G600 1RS | - | 600 | 1120 | 80 | - | - | 1 | 5 |
| TGKK4200-... | gear 15 AF sz 140/700 2RS 70 | - | 700 | 1320 | 180 | 320 | - | 2 | 7 |
| TGKK4280-... | gear 15 AF sz 160/G700 2RS 70 | - | 700 | 1520 | 380 | 320 | - | 2 | 7 |
| TGKK4220-... | gear 15 AF sz 180/G1000 2RS 70 | - | 1000 | 1720 | 280 | 420 | - | 2 | 8 |
| TGKK4230-... | gear 15 AF sz 200/G1000 3RS 70 | - | 1000 | 1920 | 280 | 420 | 680 | 3 | 9 |
| TGKK4240-... | gear 15 AF sz 220/G1000 3RS 70 | - | 1000 | 2120 | 280 | 420 | 680 | 3 | 10 |

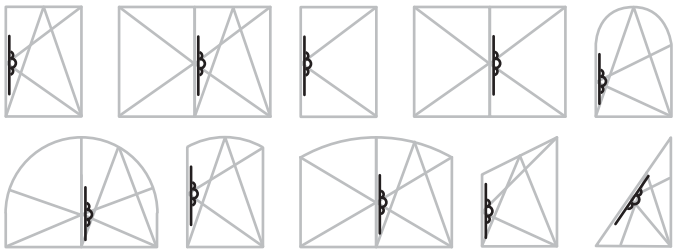

- Handle height constant
- Locking distance 700 mm

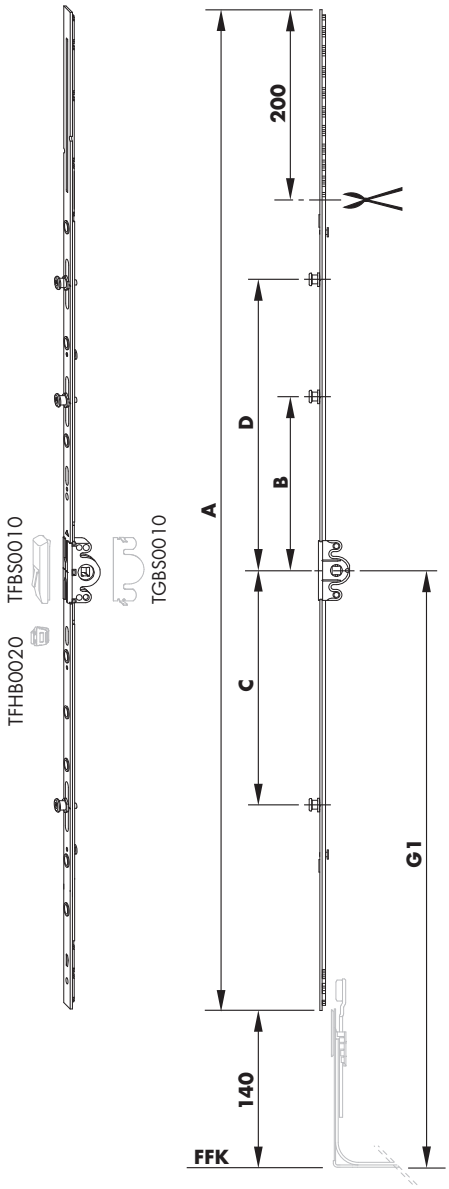

## Sales information

| Description | Part number | Surface | Colour | Box quantity |
|---|---|---|---|---|
| gear 15 AF sz 60/G300 | TGKK4030-10001_ | Titan Silver | without | 1 pc |
| | TGKK4030-10004_ | Titan Silver | without | 25 pcs |
| gear 15 AF sz 70/G300 1RS | TGKK4040-10001_ | Titan Silver | without | 1 pc |
| | TGKK4040-10004_ | Titan Silver | without | 25 pcs |
| gear 15 AF sz 80/G400 1RS | TGKK4050-10001_ | Titan Silver | without | 1 pc |
| | TGKK4050-10004_ | Titan Silver | without | 25 pcs |
| | TGKK4050-10022_ | Titan Silver | without | 400 pcs |
| gear 15 AF sz 100/G500 1RS | TGKK4060-10001_ | Titan Silver | without | 1 pc |
| | TGKK4060-10004_ | Titan Silver | without | 25 pcs |
| | TGKK4060-10022_ | Titan Silver | without | 400 pcs |
| gear 15 AF sz 120/G600 1RS | TGKK4070-10001_ | Titan Silver | without | 1 pc |
| | TGKK4070-10004_ | Titan Silver | without | 25 pcs |
| | TGKK4070-10022_ | Titan Silver | without | 400 pcs |
| gear 15 AF sz 140/700 2RS 70 | TGKK4200-10001_ | Titan Silver | without | 1 pc |
| | TGKK4200-10004_ | Titan Silver | without | 25 pcs |
| | TGKK4200-10022_ | Titan Silver | without | 400 pcs |
| gear 15 AF sz 160/G700 2RS 70 | TGKK4280-10001_ | Titan Silver | without | 1 pc |
| | TGKK4280-10004_ | Titan Silver | without | 25 pcs |
| gear 15 AF sz 180/G1000 2RS 70 | TGKK4220-10001_ | Titan Silver | without | 1 pc |
| | TGKK4220-10002_ | Titan Silver | without | 10 pcs |
| gear 15 AF sz 200/G1000 3RS 70 | TGKK4230-10001_ | Titan Silver | without | 1 pc |
| | TGKK4230-10002_ | Titan Silver | without | 10 pcs |
| gear 15 AF sz 220/G1000 3RS 70 | TGKK4240-10001_ | Titan Silver | without | 1 pc |
| | TGKK4240-10002_ | Titan Silver | without | 10 pcs |

## Technical information

| Part number | Description | FFH | Dimensions (mm) | | | | |
|---|---|---|---|---|---|---|---|
| | | | G1 | A | B | | |
| TGKK4250-... | gear 15 AF sz 60/G250 | 601 - 800 | 250 | 520 | - | 0 | 1 |
| TGKK4260-... | gear 15 AF sz 80/G250 1RS | - | 250 | 720 | 230 | 1 | 2 |
| TGKK4120-... | gear 15 AF sz 80/G300 1RS | - | 300 | 720 | 180 | 1 | 3 |
| TGKK4270-... | gear 15 AF sz 100/G250 1RS | - | 250 | 920 | 430 | 1 | 3 |
| TGKK4130-... | gear 15 AF sz 100/G300 1RS | - | 300 | 920 | 380 | 1 | 4 |
| TGKK4140-... | gear 15 AF sz 100/G400 1RS | - | 400 | 920 | 280 | 1 | 5 |
| TGKK4150-... | gear 15 AF sz 120/G300 1RS | - | 300 | 1120 | 380 | 1 | 5 |
| TGKK4160-... | gear 15 AF sz 120/G400 1RS | - | 400 | 1120 | 280 | 1 | 6 |
| TGKK4170-... | gear 15 AF sz 120/G500 1RS | - | 500 | 1120 | 180 | 1 | 5 |
| TGKK4180-... | gear 15 AF sz 140/G500 1RS | - | 500 | 1320 | 280 | 1 | 6 |
| TGKK4190-... | gear 15 AF sz 140/G600 1RS | - | 600 | 1320 | 180 | 1 | 7 |

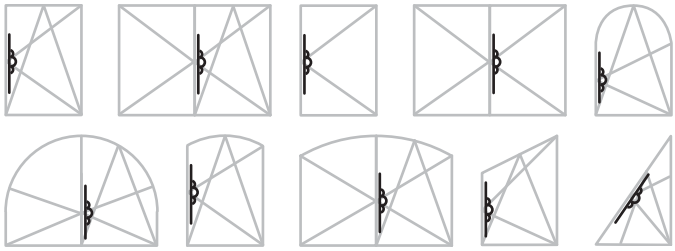

- Handle height constant

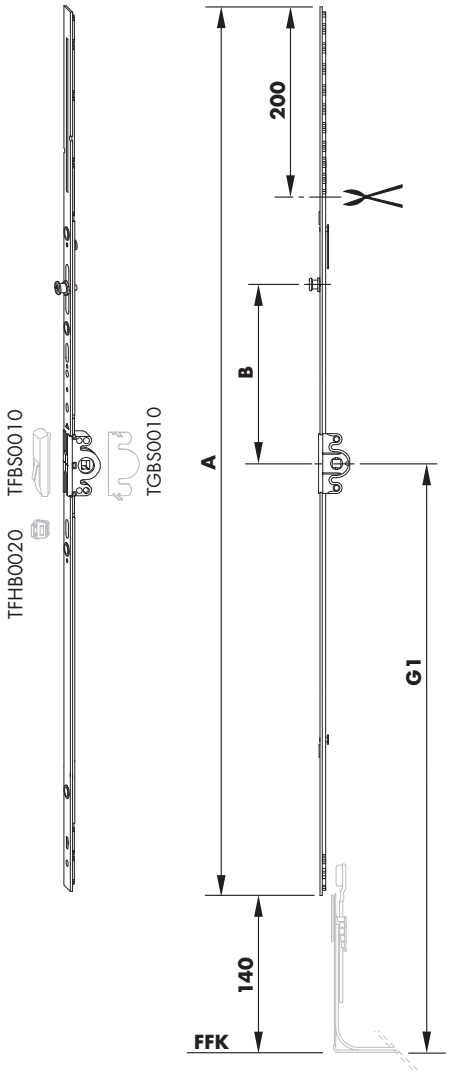

## Sales information

| Description | Part number | Surface | Colour | Box quantity |
|---|---|---|---|---|
| gear 15 AF sz 60/G250 | TGKK4250-10001_ | Titan Silver | without | 1 pc |
| | TGKK4250-10004_ | Titan Silver | without | 25 pcs |
| gear 15 AF sz 80/G250 1RS | TGKK4260-10001_ | Titan Silver | without | 1 pc |
| | TGKK4260-10004_ | Titan Silver | without | 25 pcs |
| gear 15 AF sz 80/G300 1RS | TGKK4120-10001_ | Titan Silver | without | 1 pc |
| | TGKK4120-10004_ | Titan Silver | without | 25 pcs |
| gear 15 AF sz 100/G250 1RS | TGKK4270-10001_ | Titan Silver | without | 1 pc |
| | TGKK4270-10004_ | Titan Silver | without | 25 pcs |
| gear 15 AF sz 100/G300 1RS | TGKK4130-10001_ | Titan Silver | without | 1 pc |
| | TGKK4130-10004_ | Titan Silver | without | 25 pcs |
| gear 15 AF sz 100/G400 1RS | TGKK4140-10001_ | Titan Silver | without | 1 pc |
| | TGKK4140-10004_ | Titan Silver | without | 25 pcs |
| gear 15 AF sz 120/G300 1RS | TGKK4150-10001_ | Titan Silver | without | 1 pc |
| | TGKK4150-10004_ | Titan Silver | without | 25 pcs |
| gear 15 AF sz 120/G400 1RS | TGKK4160-10001_ | Titan Silver | without | 1 pc |
| | TGKK4160-10004_ | Titan Silver | without | 25 pcs |
| gear 15 AF sz 120/G500 1RS | TGKK4170-10001_ | Titan Silver | without | 1 pc |
| | TGKK4170-10004_ | Titan Silver | without | 25 pcs |
| gear 15 AF sz 140/G500 1RS | TGKK4180-10001_ | Titan Silver | without | 1 pc |
| | TGKK4180-10004_ | Titan Silver | without | 25 pcs |
| gear 15 AF sz 140/G600 1RS | TGKK4190-10001_ | Titan Silver | without | 1 pc |
| | TGKK4190-10004_ | Titan Silver | without | 25 pcs |

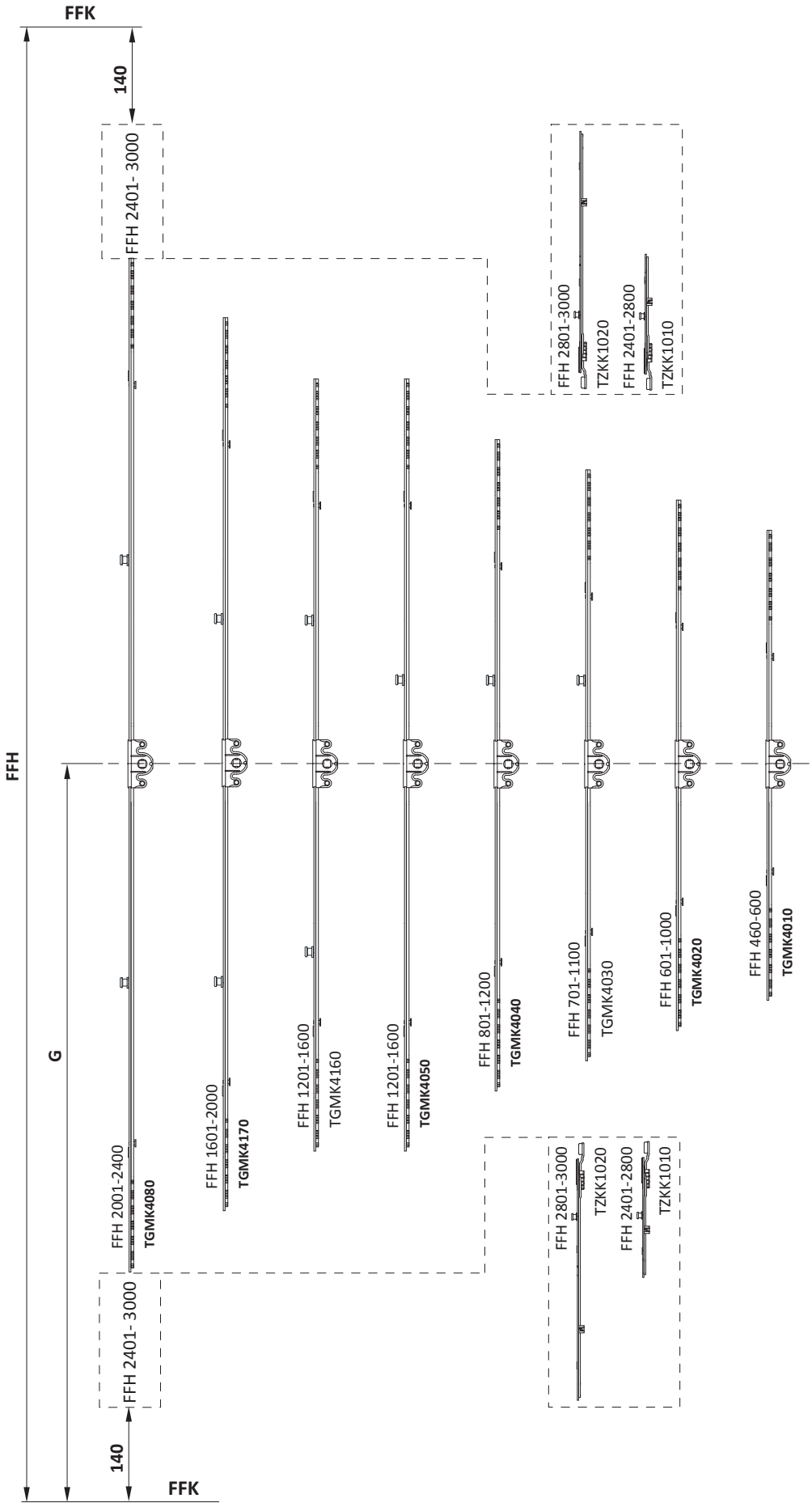
FFK
140
FFH 2401- 3000
FFH
G
FFH 2001-2400
TGMK4080
FFH 1601-2000
TGMK4170
FFH 1201-1600
TGMK4160
FFH 1201-1600
TGMK4050
FFH 801-1200
TGMK4040
FFH 701-1100
TGMK4030
FFH 601-1000
TGMK4020
FFH 460-600
TGMK4010
FFH 2801-3000
TZKK1020
FFH 2401-2800
TZKK1010
FFH 2401- 3000
140
FFK

| Material number | Description | Material number | Description | FFH (mm) | G (mm) |
|---|---|---|---|---|---|
| **TGMK4010** | gear 15 AF sz 20 | | | 460 - 600 | 230 - 300 |
| **TGMK4020** | gear 15 AF sz 60 | | | 601 - 1000 | 300 - 500 |
| TGMK4030 | gear 15 AF sz 70 1RS | | | 701 - 1100 | 350 - 550 |
| **TGMK4040** | gear 15 AF sz 80 1RS | | | 801 - 1200 | 400 - 600 |
| **TGMK4050** | gear 15 AF sz 120 1RS | | | 1201 - 1600 | 600 - 800 |
| TGMK4160 | gear 15 AF sz 120 2RS 70 | | | 1201 - 1600 | 600 - 800 |
| **TGMK4170** | gear 15 AF sz 160 2RS 70 | | | 1601 - 2000 | 800 - 1000 |
| **TGMK4080** | gear 15 AF sz 200 2RS | | | 2001 - 2400 | 1000 - 1200 |
| **TGMK4080** | gear 15 AF sz 200 2RS | **TZKK1010** | **2** linkages KK/AF sz 1 1RS | 2401 - 2800 | 1200 - 1400 |
| **TGMK4080** | gear 15 AF sz 200 2RS | **TZKK1020** | **2** linkages KK/AF sz 2 1RS | 2801 - 3000 | 1400 - 1500 |

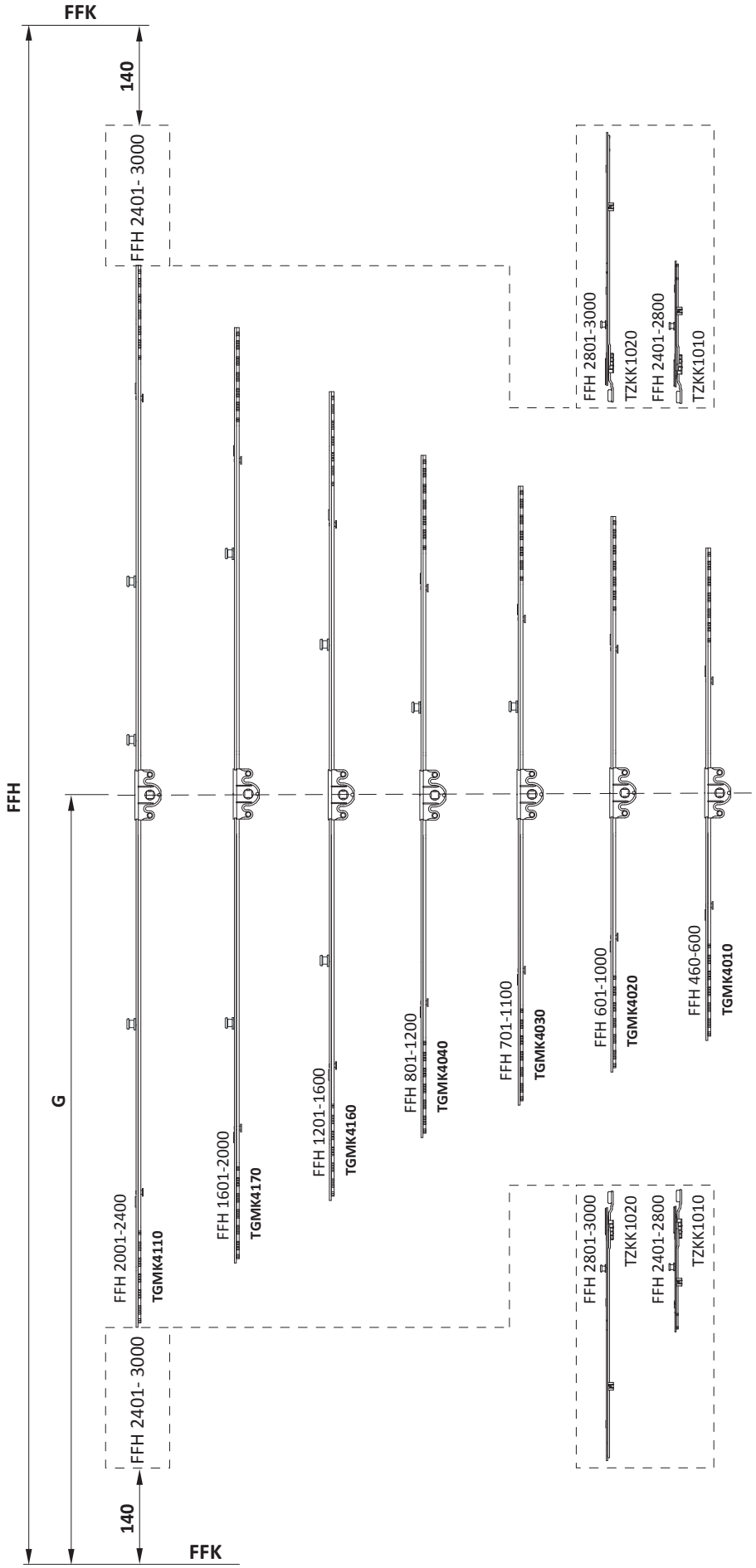
FFK
140
FFH
G
FFH 2401- 3000
FFH 2001-2400
TGMK4110
FFH 1601-2000
TGMK4170
FFH 1201-1600
TGMK4160
FFH 801-1200
TGMK4040
FFH 701-1100
TGMK4030
FFH 601-1000
TGMK4020
FFH 460-600
TGMK4010
FFH 2801-3000
TZKK1020
FFH 2401-2800
TZKK1010
FFH 2801-3000
TZKK1020
FFH 2401-2800
TZKK1010
FFH 2401- 3000
140
FFK

| Material number | Description | Material number | Description | FFH (mm) | G (mm) |
|---|---|---|---|---|---|
| **TGMK4010** | gear 15 AF sz 20 | | | 460 - 600 | 230 - 300 |
| **TGMK4020** | gear 15 AF sz 60 | | | 601 - 1000 | 300 - 500 |
| **TGMK4030** | gear 15 AF sz 70 1RS | | | 701 - 1100 | 350 - 550 |
| **TGMK4040** | gear 15 AF sz 80 1RS | | | 801 - 1200 | 400 - 600 |
| **TGMK4160** | gear 15 AF sz 120 2RS | | | 1201 - 1600 | 600 - 800 |
| **TGMK4170** | gear 15 AF sz 160 2RS 70 | | | 1601 - 2000 | 800 - 1000 |
| **TGMK4110** | gear 15 AF sz 200 3RS 70 | | | 2001 - 2400 | 1000 - 1200 |
| **TGMK4110** | gear 15 AF sz 200 3RS 70 | **TZKK1010** | **2** linkages KK/AF sz 1 1RS | 2401 - 2800 | 1200 - 1400 |
| **TGMK4110** | gear 15 AF sz 200 3RS 70 | **TZKK1020** | **2** linkages KK/AF sz 2 1RS | 2801 - 3000 | 1400 - 1500 |

## Technical information

| Part number | Description | FFH | Dimensions (mm) | | | | | |
|---|---|---|---|---|---|---|---|---|
| | | | G2 | A | B | C | | |
| TGMK4010-... | gear 15 AF sz 20 | 260 - 600 | 130 - 300 | 630 | - | - | 0 | 0 |
| TGMK4020-... | gear 15 AF sz 60 | 601 - 1000 | 300 - 500 | 720 | - | - | 0 | 2 |
| TGMK4030-... | gear 15 AF sz 70 1RS | - | 350 - 550 | 820 | 80 | - | 1 | 2 |
| TGMK4040-... | gear 15 AF sz 80 1RS | - | 400 - 600 | 920 | 80 | - | 1 | 3 |
| TGMK4050-... | gear 15 AF sz 120 1RS | - | 600 - 800 | 1320 | 80 | - | 1 | 5 |
| TGMK4160-... | gear 15 AF sz 120 2RS 70 | - | 600 - 800 | 1320 | 280 | 320 | 2 | 6 |
| TGMK4170-... | gear 15 AF sz 160 2RS 70 | - | 800 - 1000 | 1720 | 280 | 408 | 2 | 7 |
| TGMK4080-... | gear 15 AF sz 200 2RS | - | 1000 - 1500 | 2120 | 392 | 408 | 2 | 9 |

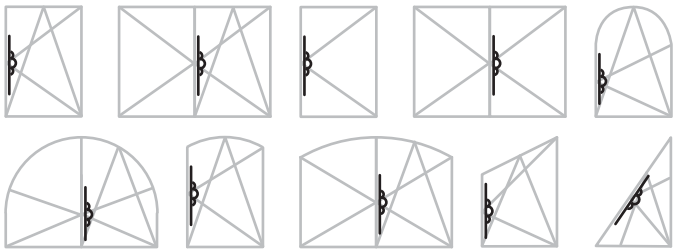

- Handle height centre/variable

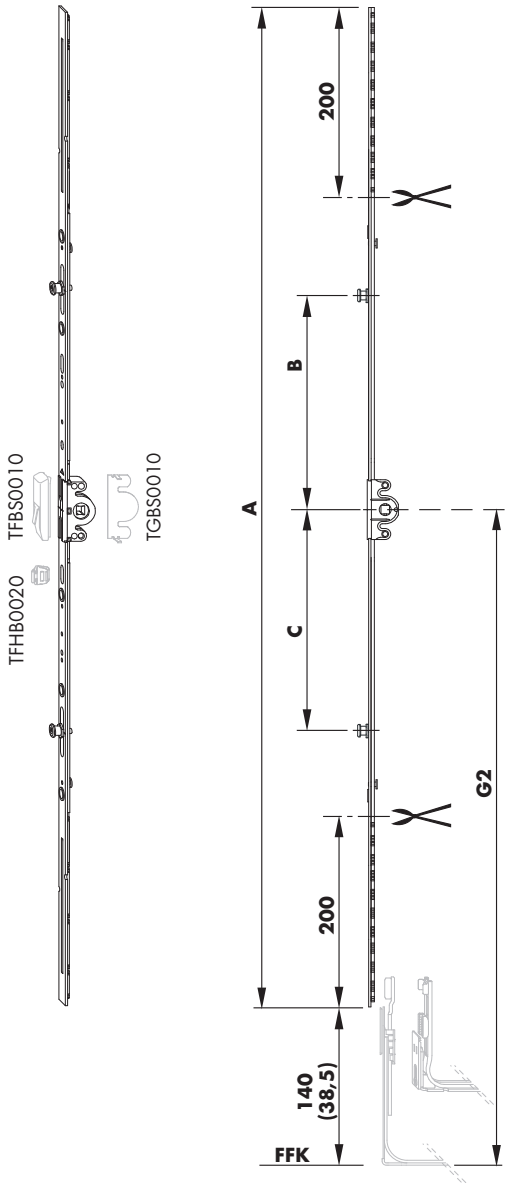

## Sales information

| Description | Part number | Surface | Colour | Box quantity |
|---|---|---|---|---|
| gear 15 AF sz 20 | TGMK4010-10001_ | Titan Silver | without | 1 pc |
| | TGMK4010-10004_ | Titan Silver | without | 25 pcs |
| gear 15 AF sz 60 | TGMK4020-10001_ | Titan Silver | without | 1 pc |
| | TGMK4020-10004_ | Titan Silver | without | 25 pcs |
| gear 15 AF sz 70 1RS | TGMK4030-10001_ | Titan Silver | without | 1 pc |
| | TGMK4030-10004_ | Titan Silver | without | 25 pcs |
| gear 15 AF sz 80 1RS | TGMK4040-10001_ | Titan Silver | without | 1 pc |
| | TGMK4040-10004_ | Titan Silver | without | 25 pcs |
| gear 15 AF sz 120 1RS | TGMK4050-10001_ | Titan Silver | without | 1 pc |
| | TGMK4050-10004_ | Titan Silver | without | 25 pcs |
| gear 15 AF sz 120 2RS 70 | TGMK4160-10001_ | Titan Silver | without | 1 pc |
| | TGMK4160-10004_ | Titan Silver | without | 25 pcs |
| gear 15 AF sz 160 2RS 70 | TGMK4170-10001_ | Titan Silver | without | 1 pc |
| | TGMK4170-10002_ | Titan Silver | without | 10 pcs |
| gear 15 AF sz 200 2RS | TGMK4080-10001_ | Titan Silver | without | 1 pc |
| | TGMK4080-10002_ | Titan Silver | without | 10 pcs |

## Technical information

| Part number | Description | FFH | Dimensions (mm) | | | | | | |
|---|---|---|---|---|---|---|---|---|---|
| | | | G2 | A | B | C | D | | |
| TGMK4010-... | gear 15 AF sz 20 | 260 - 600 | 130 - 300 | 630 | - | - | - | 0 | 0 |
| TGMK4020-... | gear 15 AF sz 60 | 601 - 1000 | 300 - 500 | 720 | - | - | - | 0 | 2 |
| TGMK4030-... | gear 15 AF sz 70 1RS | - | 350 - 550 | 820 | 80 | - | - | 1 | 2 |
| TGMK4040-... | gear 15 AF sz 80 1RS | - | 400 - 600 | 920 | 80 | - | - | 1 | 3 |
| TGMK4160-... | gear 15 AF sz 120 2RS 70 | - | 600 - 800 | 1320 | 280 | 320 | - | 2 | 6 |
| TGMK4170-... | gear 15 AF sz 160 2RS 70 | - | 800 - 1000 | 1720 | 280 | 408 | - | 2 | 7 |
| TGMK4110-... | gear 15 AF sz 200 3RS 70 | - | 1000 - 1500 | 2120 | 80 | 498 | 502 | 3 | 9 |

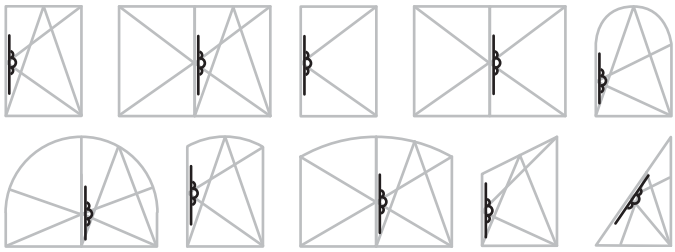

- Handle height centre/variable
- Locking distance 700 mm

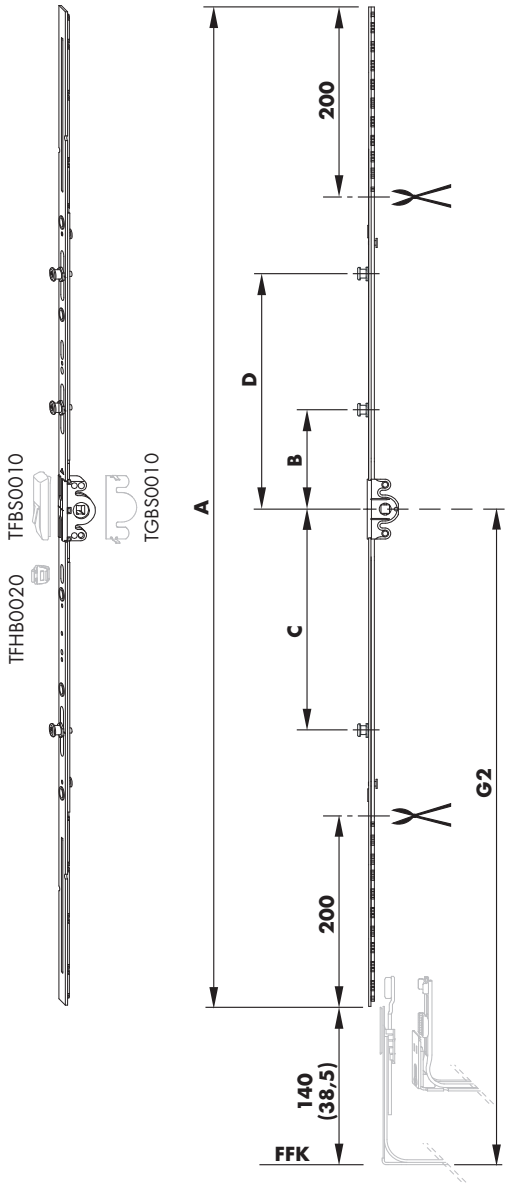

## Sales information

| Description | Part number | Surface | Colour | Box quantity |
|---|---|---|---|---|
| gear 15 AF sz 20 | TGMK4010-10001_ | Titan Silver | without | 1 pc |
| | TGMK4010-10004_ | Titan Silver | without | 25 pcs |
| gear 15 AF sz 60 | TGMK4020-10001_ | Titan Silver | without | 1 pc |
| | TGMK4020-10004_ | Titan Silver | without | 25 pcs |
| gear 15 AF sz 70 1RS | TGMK4030-10001_ | Titan Silver | without | 1 pc |
| | TGMK4030-10004_ | Titan Silver | without | 25 pcs |
| gear 15 AF sz 80 1RS | TGMK4040-10001_ | Titan Silver | without | 1 pc |
| | TGMK4040-10004_ | Titan Silver | without | 25 pcs |
| gear 15 AF sz 120 2RS 70 | TGMK4160-10001_ | Titan Silver | without | 1 pc |
| | TGMK4160-10004_ | Titan Silver | without | 25 pcs |
| gear 15 AF sz 160 2RS 70 | TGMK4170-10001_ | Titan Silver | without | 1 pc |
| | TGMK4170-10002_ | Titan Silver | without | 10 pcs |
| gear 15 AF sz 200 3RS 70 | TGMK4110-10001_ | Titan Silver | without | 1 pc |
| | TGMK4110-10002_ | Titan Silver | without | 10 pcs |

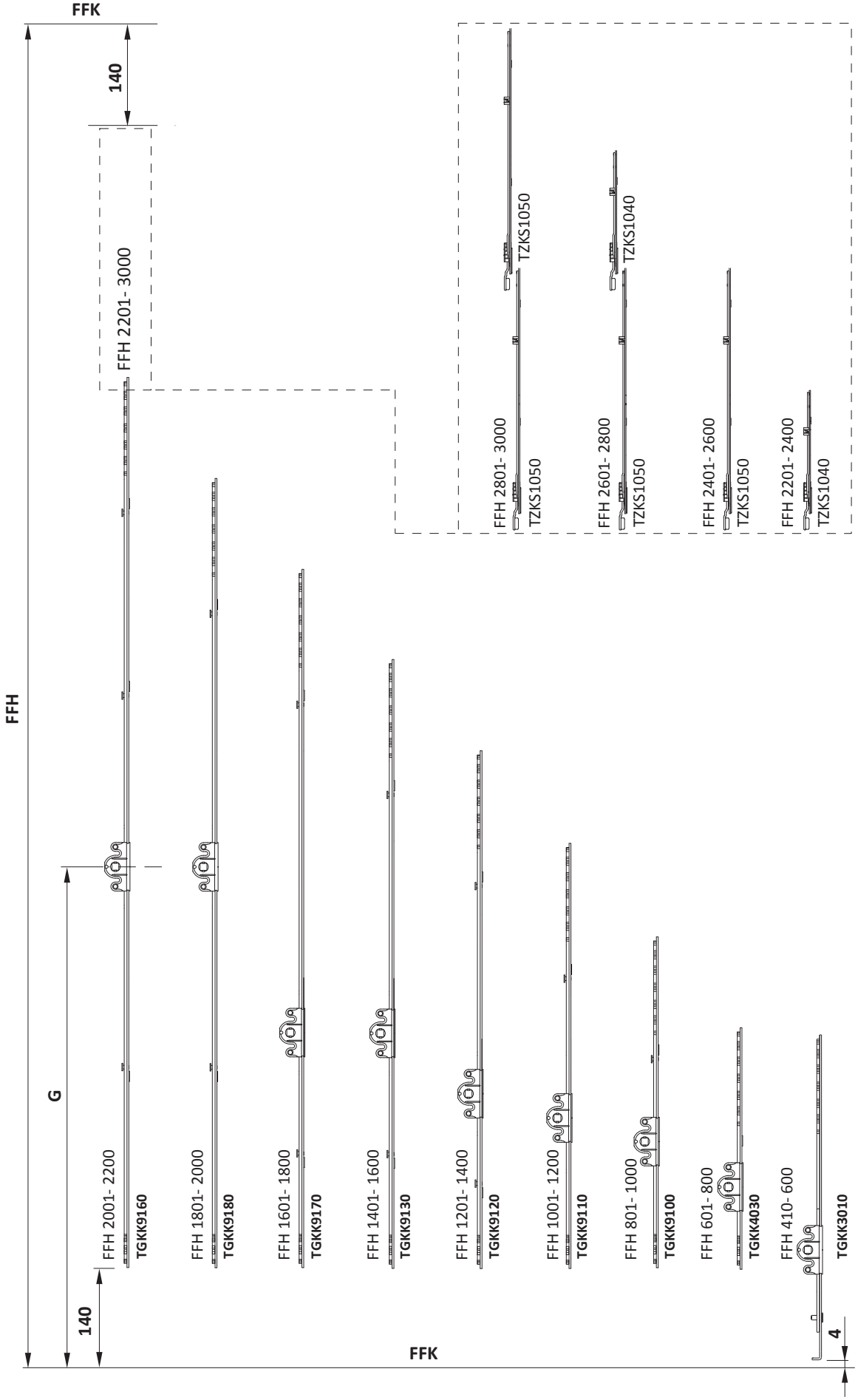
FFK
140
FFH
G
140
FFK
4
FFH 2201- 3000
FFH 2001- 2200
TGKK9160
FFH 1801- 2000
TGKK9180
FFH 1601- 1800
TGKK9170
FFH 1401- 1600
TGKK9130
FFH 1201- 1400
TGKK9120
FFH 1001- 1200
TGKK9110
FFH 801- 1000
TGKK9100
FFH 601- 800
TGKK4030
FFH 410- 600
TGKK3010
FFH 2801- 3000
TZKS1050
TZKS1050
FFH 2601- 2800
TZKS1040
TZKS1050
FFH 2401- 2600
TZKS1050
FFH 2201- 2400
TZKS1040

| Material number | Description | Material number | Description | FFH (mm) | G (mm) |
|---|---|---|---|---|---|
| **TGKK3010** | gear 15 sz 30/G180 | | | 410 - 600 | 180 |
| **TGKK4030** | gear 15 AF sz 60/G300 | | | 601 - 800 | 300 |
| **TGKK9100** | gear 15 AF OZ sz 80/G400 | | | 801 - 1000 | 400 |
| **TGKK9110** | gear 15 AF OZ sz 100/G500 | | | 1001 - 1200 | 500 |
| **TGKK9120** | gear 15 AF OZ sz 120/G600 | | | 1201 - 1400 | 600 |
| **TGKK9130** | gear 15 AF OZ sz 140/G700 | | | 1401 - 1600 | 700 |
| **TGKK9170** | gear 15 AF OZ sz 160/G700 | | | 1601 - 1800 | 700 |
| **TGKK9180** | gear 15 AF OZ sz 180/G1000 | | | 1801 - 2000 | 1000 |
| **TGKK9160** | gear 15 AF OZ sz 200/G1000 | | | 2001 - 2200 | 1000 |
| **TGKK9160** | gear 15 AF OZ sz 200/G1000 | **TZKS1040** | linkage AF sz 1 A0767 | 2201 - 2400 | 1000 |
| **TGKK9160** | gear 15 AF OZ sz 200/G1000 | **TZKS1050** | linkage AF sz 2 A0767 | 2401 - 2600 | 1000 |
| **TGKK9160** | gear 15 AF OZ sz 200/G1000 | **TZKS1040** | linkage AF sz 1 A0767 | 2601 - 2800 | 1000 |
| | | **TZKS1050** | linkage AF sz 2 A0767 | | |
| **TGKK9160** | gear 15 AF OZ sz 200/G1000 | **TZKS1050** | linkage AF sz 2 A0767 | 2801 - 3000 | 1000 |
| | | **TZKS1050** | linkage AF sz 2 A0767 | | |

## Technical information

| Part number | Description | Dimensions (mm) | | | |
|---|---|---|---|---|---|
| | | G1 | A | | |
| TGKK3010-... | gear 15 sz 30/G180 | 180 | 495 | 0 | 1 |

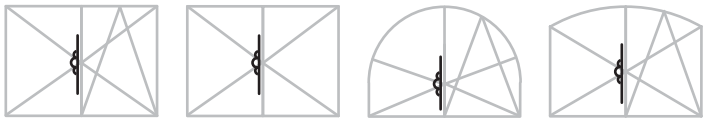

- Handle height constant
- Applicable in the secondary sash with the 2nd handle

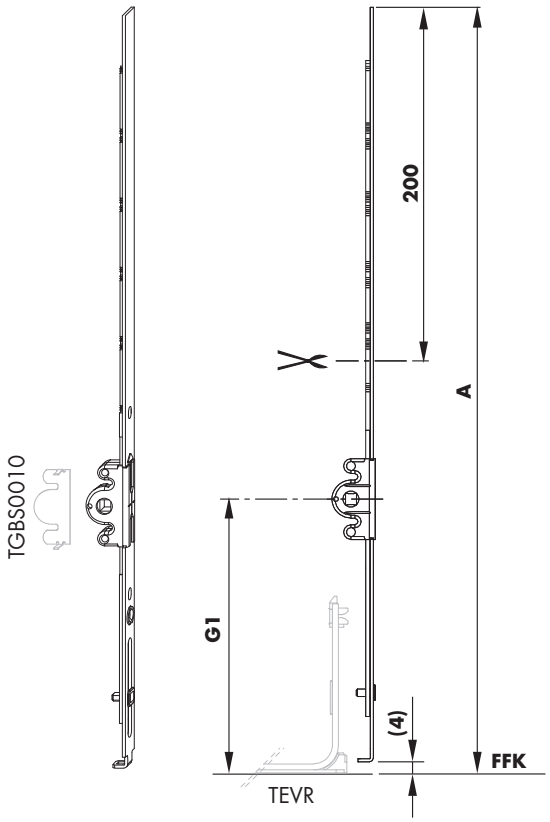


## Sales information

| Description | Part number | Surface | Colour | Box quantity |
|---|---|---|---|---|
| gear 15 sz 30/G180 | TGKK3010-10001_ | Titan Silver | without | 1 pc |
| | TGKK3010-10004_ | Titan Silver | without | 25 pcs |

## Technical information

| Part number | Description | FFH | Dimensions (mm) | | | |
|---|---|---|---|---|---|---|
| | | | G1 | A | | |
| TGKK9100-... | gear 15 AF OZ sz 80/G400 | 801 - 1000 | 400 | 720 | 0 | 3 |
| TGKK9110-... | gear 15 AF OZ sz 100/G500 | 1001 - 1200 | 500 | 920 | 0 | 4 |
| TGKK9120-... | gear 15 AF OZ sz 120/G600 | 1201 - 1400 | 600 | 1120 | 0 | 5 |
| TGKK9130-... | gear 15 AF OZ sz 140/G700 | 1401 - 1600 | 700 | 1320 | 0 | 6 |
| TGKK9170-... | gear 15 AF OZ sz 160/G700 | 1601 - 1800 | 700 | 1520 | 0 | 7 |
| TGKK9180-... | gear 15 AF OZ sz 180/G1000 | 1801 - 2000 | 1000 | 1720 | 0 | 8 |
| TGKK9160-... | gear 15 AF OZ sz 200/G1000 | 2001 - 3000 | 1000 | 1920 | 0 | 9 |

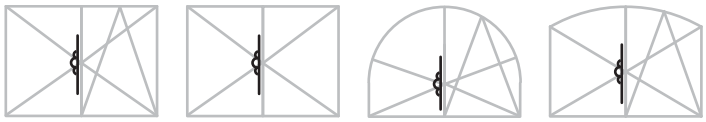

- Handle height constant
- Applicable in the secondary sash with the 2nd handle

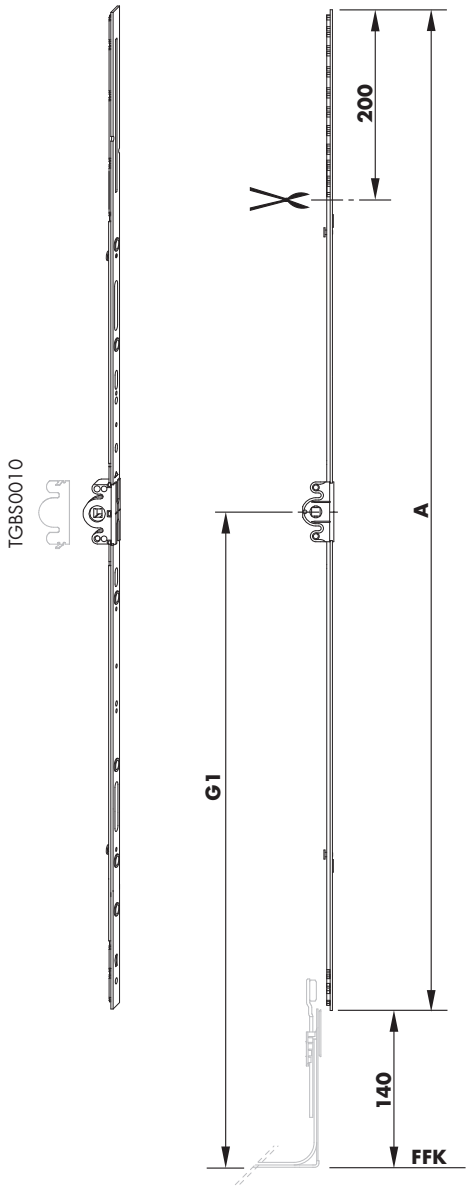

## Sales information

| Description | Part number | Surface | Colour | Box quantity |
|---|---|---|---|---|
| gear 15 AF OZ sz 80/G400 | TGKK9100-10001_ | Titan Silver | without | 1 pc |
| | TGKK9100-10004_ | Titan Silver | without | 25 pcs |
| gear 15 AF OZ sz 100/G500 | TGKK9110-10001_ | Titan Silver | without | 1 pc |
| | TGKK9110-10004_ | Titan Silver | without | 25 pcs |
| gear 15 AF OZ sz 120/G600 | TGKK9120-10001_ | Titan Silver | without | 1 pc |
| | TGKK9120-10004_ | Titan Silver | without | 25 pcs |
| gear 15 AF OZ sz 140/G700 | TGKK9130-10001_ | Titan Silver | without | 1 pc |
| | TGKK9130-10004_ | Titan Silver | without | 25 pcs |
| gear 15 AF OZ sz 160/G700 | TGKK9170-10001_ | Titan Silver | without | 1 pc |
| | TGKK9170-10004_ | Titan Silver | without | 25 pcs |
| gear 15 AF OZ sz 180/G1000 | TGKK9180-10001_ | Titan Silver | without | 1 pc |
| | TGKK9180-10002_ | Titan Silver | without | 10 pcs |
| gear 15 AF OZ sz 200/G1000 | TGKK9160-10001_ | Titan Silver | without | 1 pc |
| | TGKK9160-10002_ | Titan Silver | without | 10 pcs |

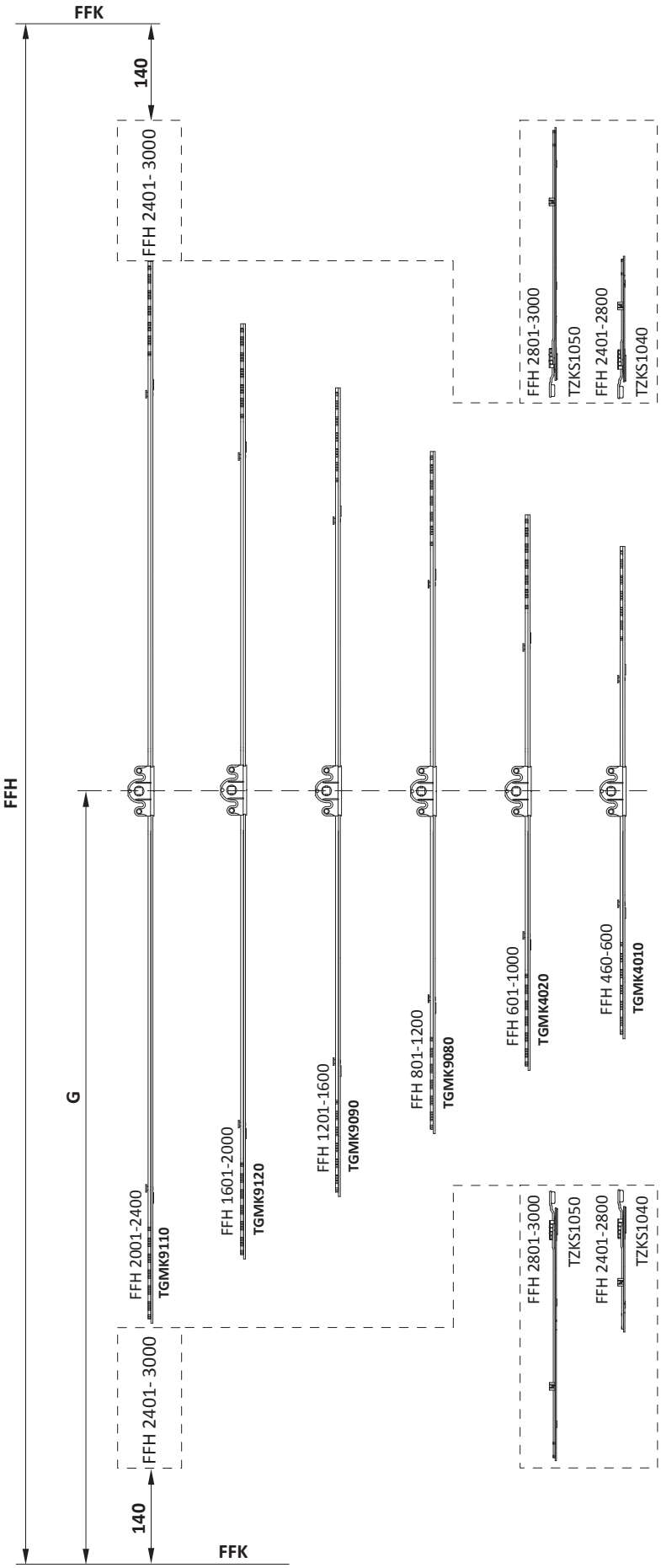
FFK
140
FFH
G
FFH 2401- 3000
FFH 2001-2400
TGMK9110
FFH 1601-2000
TGMK9120
FFH 1201-1600
TGMK9090
FFH 801-1200
TGMK9080
FFH 601-1000
TGMK4020
FFH 460-600
TGMK4010
FFH 2801-3000
TZKS1050
FFH 2401-2800
TZKS1040
FFH 2801-3000
TZKS1050
FFH 2401-2800
TZKS1040
FFH 2401- 3000
140
FFK

| Material number | Description | Material number | Description | FFH (mm) | G (mm) |
|---|---|---|---|---|---|
| **TGMK4010** | gear 15 AF sz 20 | | | 460 - 600 | 230 - 300 |
| **TGMK4020** | gear 15 AF sz 60 | | | 601 - 1000 | 300 - 500 |
| **TGMK9080** | gear 15 AF OZ sz 80 | | | 801 - 1200 | 400 - 600 |
| **TGMK9090** | gear 15 AF OZ sz 120 | | | 1201 - 1600 | 600 - 800 |
| **TGMK9120** | gear 15 AF OZ sz 160 | | | 1601 - 2000 | 800 - 1000 |
| **TGMK9110** | gear 15 AF OZ sz 200 | | | 2001 - 2400 | 1000 - 1200 |
| **TGMK9110** | gear 15 AF OZ sz 200 | **TZZS0150** | **2** linkages AF sz 1 | 2401 - 2800 | 1200 - 1400 |
| **TGMK9110** | gear 15 AF OZ sz 200 | **TZZS0230** | **2** linkages AF sz 2 | 2801 - 3000 | 1400 - 1500 |

## Technical information

| Part number | Description | FFH | Dimensions (mm) | | | |
|---|---|---|---|---|---|---|
| | | | G2 | A | | |
| TGMK9080-... | gear 15 AF OZ sz 80 | 801 - 1200 | 400 - 600 | 920 | 0 | 3 |
| TGMK9090-... | gear 15 AF OZ sz 120 | 1201 - 1600 | 600 - 800 | 1320 | 0 | 5 |
| TGMK9120-... | gear 15 AF OZ sz 160 | 1601 - 2000 | 800 - 1000 | 1720 | 0 | 7 |
| TGMK9110-... | gear 15 AF OZ sz 200 | 2001 - 3000 | 1000 - 1500 | 2120 | 0 | 9 |

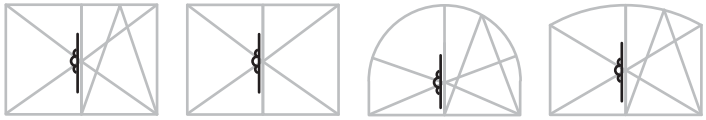

- Handle height centre/variable
- Applicable in the secondary sash with the 2nd handle



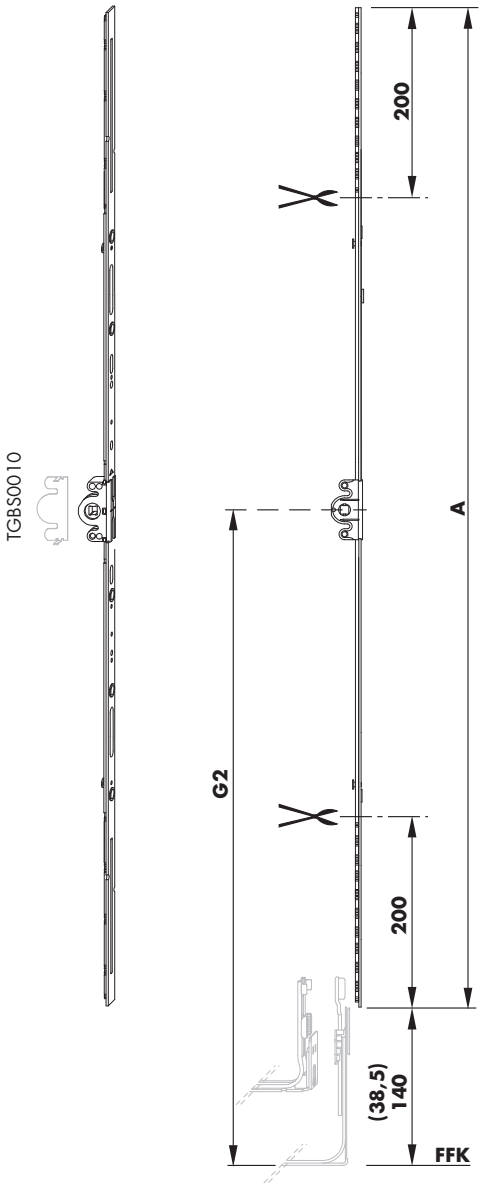

## Sales information

| Description | Part number | Surface | Colour | Box quantity |
|---|---|---|---|---|
| gear 15 AF OZ sz 80 | TGMK9080-10001_ | Titan Silver | without | 1 pc |
| | TGMK9080-10004_ | Titan Silver | without | 25 pcs |
| gear 15 AF OZ sz 120 | TGMK9090-10001_ | Titan Silver | without | 1 pc |
| | TGMK9090-10004_ | Titan Silver | without | 25 pcs |
| gear 15 AF OZ sz 160 | TGMK9120-10001_ | Titan Silver | without | 1 pc |
| | TGMK9120-10002_ | Titan Silver | without | 10 pcs |
| gear 15 AF OZ sz 200 | TGMK9110-10001_ | Titan Silver | without | 1 pc |
| | TGMK9110-10002_ | Titan Silver | without | 10 pcs |

| Description | Material | Page |
|---|---|---|
| Drill holes and routing | | 3.2 - 2 |
| Application matrix:<br>gear 7 AF, handle height constant | | 3.2 - 3 |
| Application matrix:<br>gear 7 AF, handle height constant, locking distance 700 mm | | 3.2 - 5 |
| gear 7 AF GK | TGKK1310 | 3.2 - 7 |
| gear 7 AF GK FH FBS | TGKK1490 | 3.2 - 8 |
| gear 7 AF GK | TGKK1320, TGKK1330, TGKK1340, TGKK1350, TGKK1360, TGKK1370, TGKK1580, TGKK1540, TGKK1400 | 3.2 - 9 |
| gear 7 AF GK 700 | TGKK1320, TGKK1340, TGKK1350, TGKK1360, TGKK1570, TGKK1580, TGKK1540, TGKK1550, TGKK1560 | 3.2 - 11 |
| gear 7 AF GK | TGKK1590, TGKK1510, TGKK1410, TGKK1520, TGKK1420, TGKK1430, TGKK1440, TGKK1450, TGKK1460, TGKK1470, TGKK1480, TGKK1530 | 3.2 - 13 |
| Application matrix:<br>gear 7 AF, handle height centre/variable | | 3.2 - 15 |
| Application matrix:<br>gear 7 AF, handle height centre/variable, locking distance 700 mm | | 3.2 - 17 |
| gear 7 AF GM | TGMK1310, TGMK1320, TGMK1330, TGMK1340, TGMK1350, TGMK1410, TGMK1380 | 3.2 - 19 |
| gear 7 AF GM 700 | TGMK1310, TGMK1320, TGMK1330, TGMK1340, TGMK1400, TGMK1410, TGMK1390 | 3.2 - 21 |

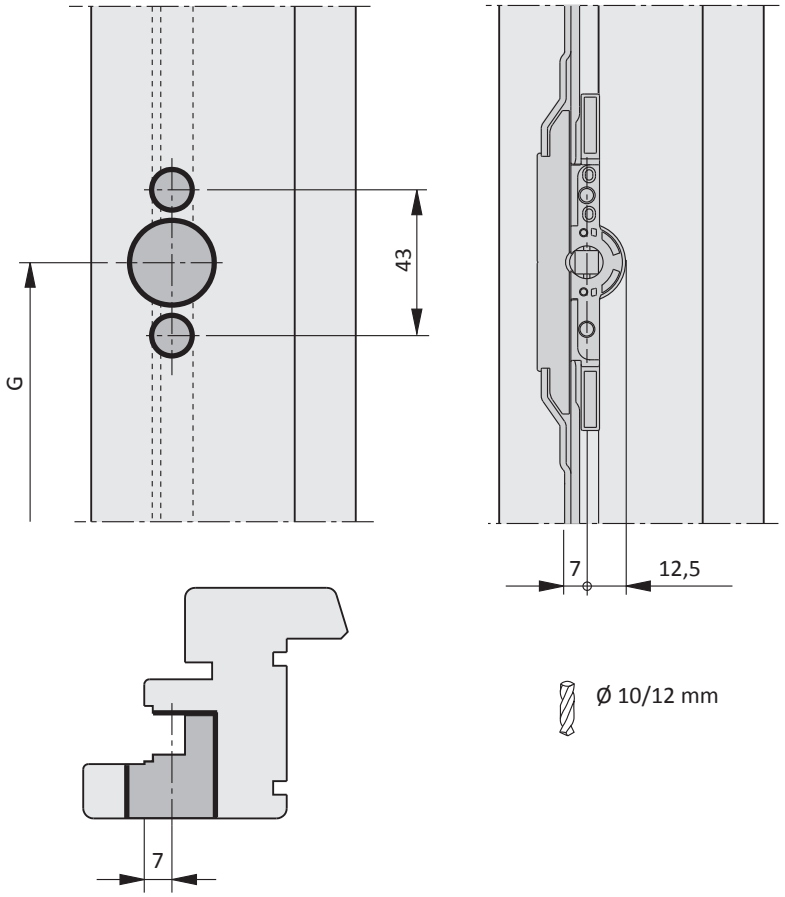
43
G
7
12,5
Ø 10/12 mm
7

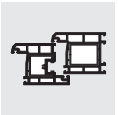

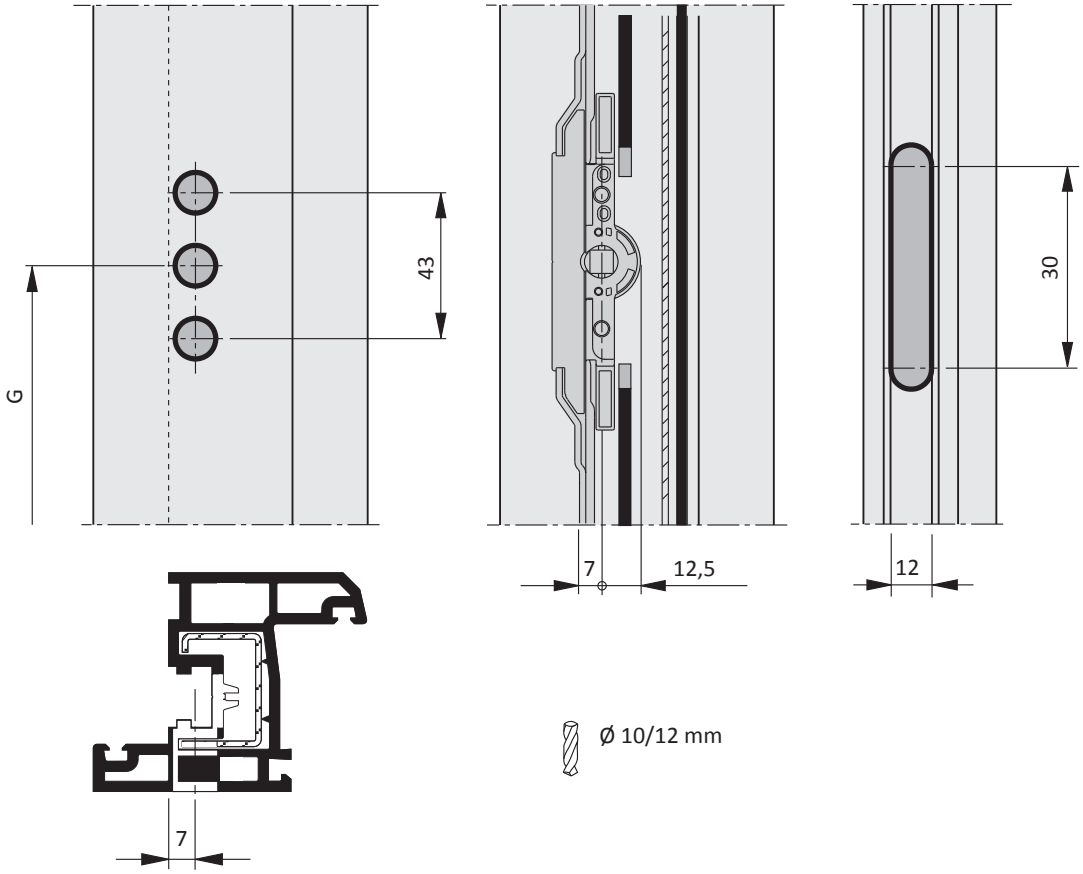
43
G
30
7
12,5
12
Ø 10/12 mm
7

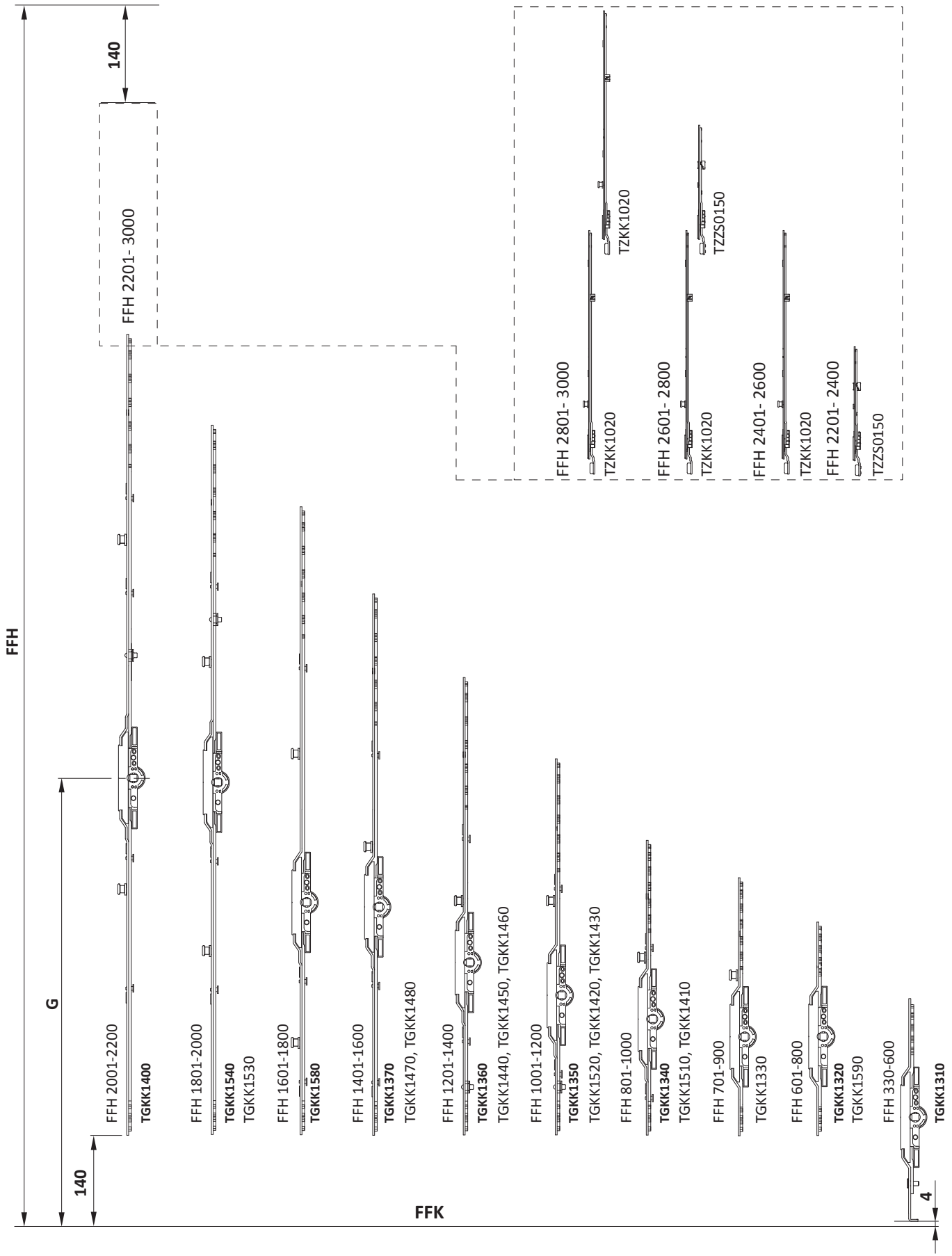
FFH
G
140
140
FFK
4
FFH 2001-2200
TGKK1400
FFH 1801-2000
TGKK1540
TGKK1530
FFH 1601-1800
TGKK1580
FFH 1401-1600
TGKK1370
TGKK1470, TGKK1480
FFH 1201-1400
TGKK1360
TGKK1440, TGKK1450, TGKK1460
FFH 1001-1200
TGKK1350
TGKK1520, TGKK1420, TGKK1430
FFH 801-1000
TGKK1340
TGKK1510, TGKK1410
FFH 701-900
TGKK1330
FFH 601-800
TGKK1320
TGKK1590
FFH 330-600
TGKK1310
FFH 2201- 3000
FFH 2801- 3000
TZKK1020
TZKK1020
FFH 2601- 2800
TZZS0150
TZKK1020
FFH 2401- 2600
TZKK1020
FFH 2201- 2400
TZZS0150

| Material number | Description | Material number | Description | FFH (mm) | G (mm) |
|---|---|---|---|---|---|
| **TGKK1310** | gear 7 AF sz 40/G180 | | | 330 - 600 | 180 |
| **TGKK1320** | gear 7 AF sz 60/G300 | | | 601 - 800 | 300 |
| TGKK1590 | gear 7 AF sz 60/G250 FBS | | | 601 - 800 | 250 |
| TGKK1330 | gear 7 AF sz 70/G300 FBS | | | 701 - 900 | 300 |
| **TGKK1340** | gear 7 AF sz 80/G400 1RS | | | 801 - 1000 | 400 |
| TGKK1510 | gear 7 AF sz 80/G250 1RS | | | 801 - 1000 | 250 |
| TGKK1410 | gear 7 AF sz 80/G300 1RS | | | 801 - 1000 | 300 |
| **TGKK1350** | gear 7 AF sz 100/G500 1RS | | | 1001 - 1200 | 500 |
| TGKK1520 | gear 7 AF sz 100/G250 1RS | | | 1001 - 1200 | 250 |
| TGKK1420 | gear 7 AF sz 100/G300 1RS | | | 1001 - 1200 | 300 |
| TGKK1430 | gear 7 AF sz 100/G400 1RS | | | 1001 - 1200 | 400 |
| **TGKK1360** | gear 7 AF sz 120/G600 1RS | | | 1201 - 1400 | 600 |
| TGKK1440 | gear 7 AF sz 120/G300 1RS | | | 1201 - 1400 | 300 |
| TGKK1450 | gear 7 AF sz 120/G400 1RS | | | 1201 - 1400 | 400 |
| TGKK1460 | gear 7 AF sz 120/G500 1RS | | | 1201 - 1400 | 500 |
| **TGKK1370** | gear 7 AF sz 140/G700 1RS | | | 1401 - 1600 | 700 |
| TGKK1470 | gear 7 AF sz 140/G500 1RS | | | 1401 - 1600 | 500 |
| TGKK1480 | gear 7 AF sz 140/G600 1RS | | | 1401 - 1600 | 600 |
| **TGKK1580** | gear 7 AF sz 160/G700 2RS 70 | | | 1601 - 1800 | 700 |
| **TGKK1540** | gear 7 AF sz 180/G1000 2RS 70 | | | 1801 - 2000 | 1000 |
| TGKK1530 | gear 7 AF sz 180/G800 2RS | | | 1801 - 2000 | 800 |
| **TGKK1400** | gear 7 AF sz 200/G1000 2RS | | | 2001 - 2200 | 1000 |
| **TGKK1400** | gear 7 AF sz 200/G1000 2RS | **TZZS0150** | linkage AF sz 1 | 2201 - 2400 | 1000 |
| **TGKK1400** | gear 7 AF sz 200/G1000 2RS | **TZKK1020** | linkage KK/AF sz 2 1RS | 2401 - 2600 | 1000 |
| **TGKK1400** | gear 7 AF sz 200/G1000 2RS | **TZKK1020** | linkage KK/AF sz 2 1RS | 2601 - 2800 | 1000 |
| | | **TZZS0150** | linkage AF sz 1 | | |
| **TGKK1400** | gear 7 AF sz 200/G1000 2RS | **TZKK1020** | linkage KK/AF sz 2 1RS | 2801 - 3000 | 1000 |
| | | **TZKK1020** | linkage KK/AF sz 2 1RS | | |

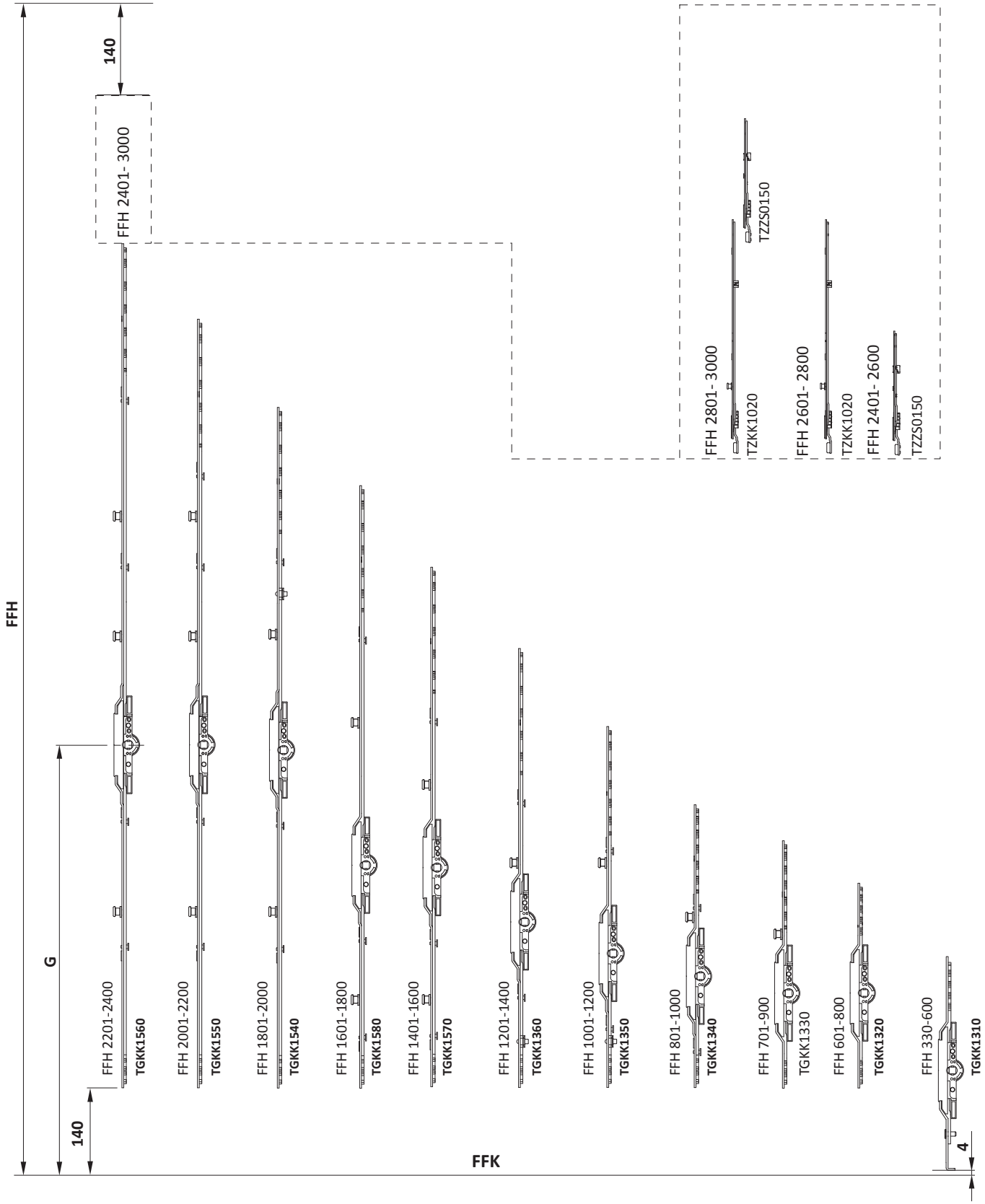
FFH
140
FFH 2401- 3000
G
140
FFH 2201-2400
TGKK1560
FFH 2001-2200
TGKK1550
FFH 1801-2000
TGKK1540
FFH 1601-1800
TGKK1580
FFH 1401-1600
TGKK1570
FFH 1201-1400
TGKK1360
FFH 1001-1200
TGKK1350
FFH 801-1000
TGKK1340
FFH 701-900
TGKK1330
FFH 601-800
TGKK1320
FFH 330-600
TGKK1310
FFK
4
FFH 2801- 3000
TZKK1020
TZZS0150
FFH 2601- 2800
TZKK1020
FFH 2401- 2600
TZZS0150

| Material number | Description | Material number | Description | FFH (mm) | G (mm) |
|---|---|---|---|---|---|
| **TGKK1310** | gear 7 AF sz 40/G180 | | | 330 - 600 | 180 |
| **TGKK1320** | gear 7 AF sz 60/G300 | | | 601 - 800 | 300 |
| **TGKK1340** | gear 7 AF sz 80/G400 1RS | | | 801 - 1000 | 400 |
| **TGKK1350** | gear 7 AF sz 100/G500 1RS | | | 1001 - 1200 | 500 |
| **TGKK1360** | gear 7 AF sz 120/G600 1RS | | | 1201 - 1400 | 600 |
| **TGKK1570** | gear 7 AF sz 140/G700 2RS 70 | | | 1401 - 1600 | 700 |
| **TGKK1580** | gear 7 AF sz 160/G700 2RS 70 | | | 1601 - 1800 | 700 |
| **TGKK1540** | gear 7 AF sz 180/G1000 2RS 70 | | | 1801 - 2000 | 1000 |
| **TGKK1550** | gear 7 AF sz 200/G1000 3RS 70 | | | 2001 - 2200 | 1000 |
| **TGKK1560** | gear 7 AF sz 220/G1000 3RS 70 | | | 2201 - 2400 | 1000 |
| **TGKK1560** | gear 7 AF sz 220/G1000 3RS 70 | **TZZS0150** | linkage AF sz 1 | 2401 - 2600 | 1000 |
| **TGKK1560** | gear 7 AF sz 220/G1000 3RS 70 | **TZKK1020** | linkage KK/AF sz 2 1RS | 2601 - 2800 | 1000 |
| **TGKK1560** | gear 7 AF sz 220/G1000 3RS 70 | **TZKK1020** | linkage KK/AF sz 2 1RS | 2801 - 3000 | 1000 |
| | | **TZZS0150** | linkage AF sz 1 | | |

## Technical information

| Part number | Description | FFH | Dimensions (mm) | | | |
|---|---|---|---|---|---|---|
| | | | G1 | A | | |
| TGKK1310-... | gear 7 AF sz 40/G180 | 330 - 600 | 180 | 495 | 0 | 1 |

- Handle height constant

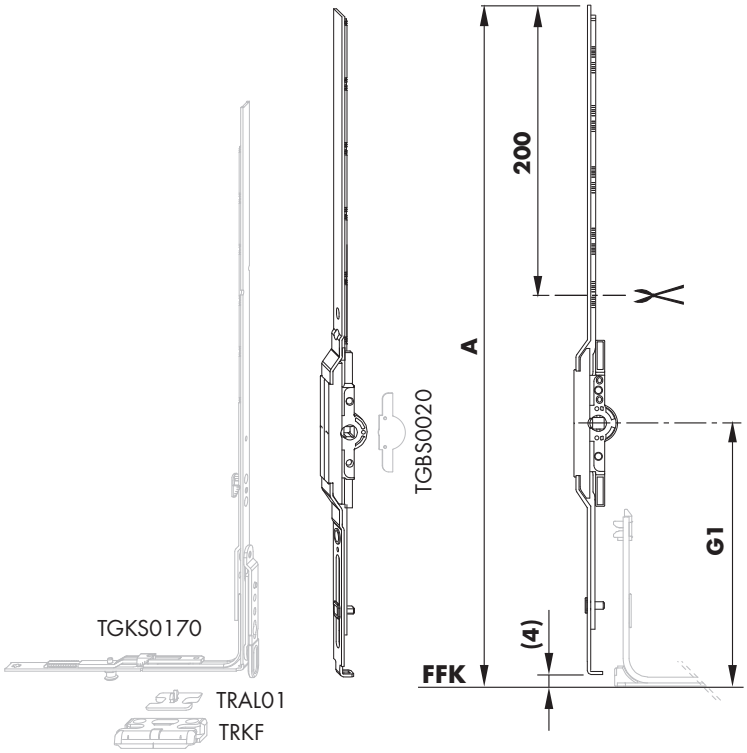


## Sales information

| Description | Part number | Surface | Colour | Box quantity |
|---|---|---|---|---|
| gear 7 AF sz 40/G180 | TGKK1310-10001_ | Titan Silver | without | 1 pc |
| | TGKK1310-10004_ | Titan Silver | without | 25 pcs |

## Technical information

| Part number | Description | FFH | Dimensions (mm) | | | |
|---|---|---|---|---|---|---|
| | | | G1 | A | | |
| TGKK1490-... | gear 7 AF sz 40/G180 FH FBS | 330 - 600 | 180 | 495 | 0 | 1 |

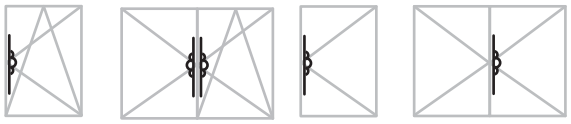

- Handle height constant
- Run up block for sash lift FBS, refer to PDB line item TRAU



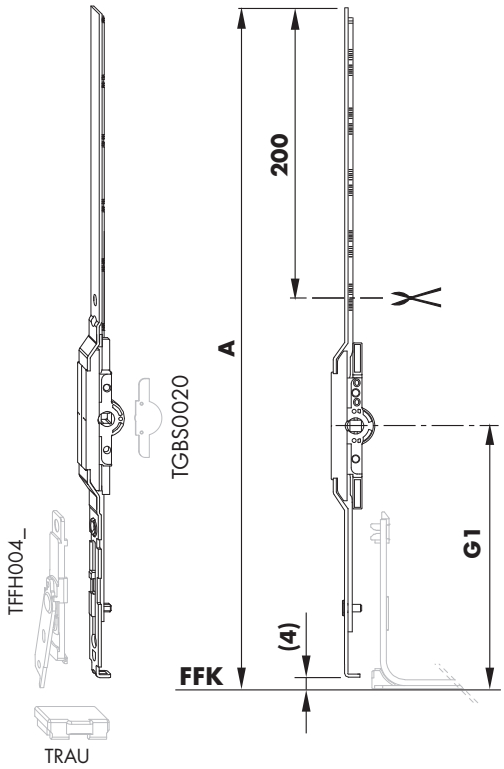


## Sales information

| Description | Part number | Surface | Colour | Box quantity |
|---|---|---|---|---|
| gear 7 AF sz 40/G180 FH FBS | TGKK1490-10001_ | Titan Silver | without | 1 pc |
| | TGKK1490-10004_ | Titan Silver | without | 25 pcs |

## Technical information

| Part number | Description | FFH | Dimensions (mm) | | | | | |
|---|---|---|---|---|---|---|---|---|
| | | | G1 | A | B | C | | |
| TGKK1320-... | gear 7 AF sz 60/G300 | 601 - 800 | 300 | 520 | - | - | 0 | 2 |
| TGKK1330-... | gear 7 AF sz 70/G300 1RS | 701 - 900 | 300 | 620 | 80 | - | 1 | 2 |
| TGKK1340-... | gear 7 AF sz 80/G400 1RS | 801 - 1000 | 400 | 720 | 80 | - | 1 | 2 |
| TGKK1350-... | gear 7 AF sz 100/G500 1RS | 1001 - 1200 | 500 | 920 | 180 | - | 1 | 4 |
| TGKK1360-... | gear 7 AF sz 120/G600 1RS | 1201 - 1400 | 600 | 1120 | 80 | - | 1 | 5 |
| TGKK1370-... | gear 7 AF sz 140/G700 1RS | 1401 - 1600 | 700 | 1320 | 80 | - | 1 | 6 |
| TGKK1580-... | gear 7 AF sz 160/G700 2RS 70 | 1601 - 1800 | 700 | 1520 | 380 | 320 | 2 | 7 |
| TGKK1540-... | gear 7 AF sz 180/G1000 2RS 70 | 1801 - 2000 | 1000 | 1720 | 280 | 420 | 2 | 8 |
| TGKK1400-... | gear 7 AF sz 200/G1000 2RS | 2001 - 2200 | 1000 | 1920 | 580 | 220 | 2 | 9 |

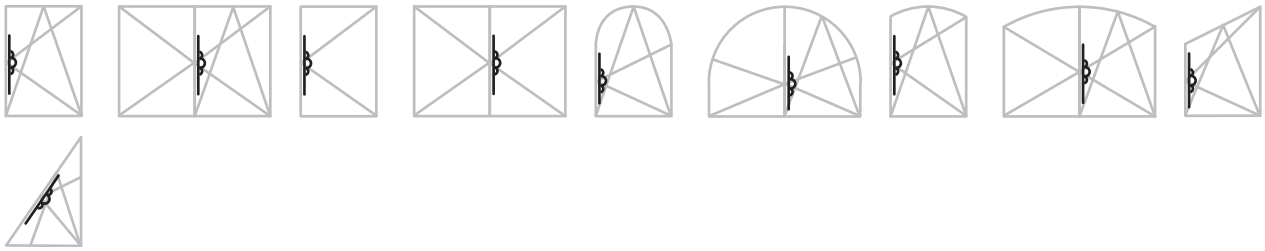

- Handle height constant
- The mishandling device TFBS0010 cannot be used with gears TGKK1320/1330

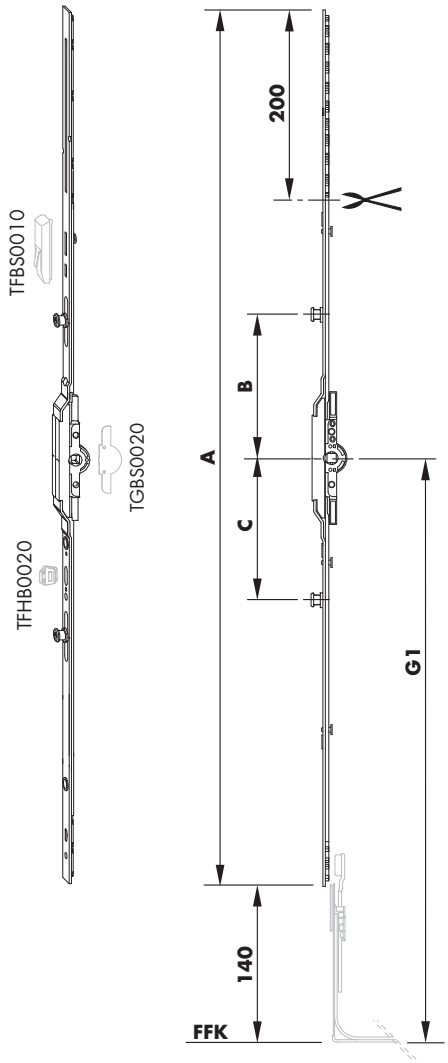

## Sales information

| Description | Part number | Surface | Colour | Box quantity |
|---|---|---|---|---|
| gear 7 AF sz 60/G300 | TGKK1320-10001_ | Titan Silver | without | 1 pc |
| | TGKK1320-10004_ | Titan Silver | without | 25 pcs |
| gear 7 AF sz 70/G300 1RS | TGKK1330-10001_ | Titan Silver | without | 1 pc |
| | TGKK1330-10004_ | Titan Silver | without | 25 pcs |
| gear 7 AF sz 80/G400 1RS | TGKK1340-10001_ | Titan Silver | without | 1 pc |
| | TGKK1340-10004_ | Titan Silver | without | 25 pcs |
| gear 7 AF sz 100/G500 1RS | TGKK1350-10001_ | Titan Silver | without | 1 pc |
| | TGKK1350-10004_ | Titan Silver | without | 25 pcs |
| gear 7 AF sz 120/G600 1RS | TGKK1360-10001_ | Titan Silver | without | 1 pc |
| | TGKK1360-10004_ | Titan Silver | without | 25 pcs |
| gear 7 AF sz 140/G700 1RS | TGKK1370-10001_ | Titan Silver | without | 1 pc |
| | TGKK1370-10004_ | Titan Silver | without | 25 pcs |
| gear 7 AF sz 160/G700 2RS 70 | TGKK1580-10001_ | Titan Silver | without | 1 pc |
| | TGKK1580-10004_ | Titan Silver | without | 25 pcs |
| gear 7 AF sz 180/G1000 2RS 70 | TGKK1540-10001_ | Titan Silver | without | 1 pc |
| | TGKK1540-10002_ | Titan Silver | without | 10 pcs |
| gear 7 AF sz 200/G1000 2RS | TGKK1400-10001_ | Titan Silver | without | 1 pc |
| | TGKK1400-10002_ | Titan Silver | without | 10 pcs |

## Technical information

| Part number | Description | FFH | Dimensions (mm) | | | | | | |
|---|---|---|---|---|---|---|---|---|---|
| | | | G1 | A | B | C | D | | |
| TGKK1320-... | gear 7 AF sz 60/G300 | 601 - 800 | 300 | 520 | - | - | - | 0 | 2 |
| TGKK1330-... | gear 7 AF sz 70/G300 1RS | 701 - 900 | 300 | 620 | 80 | - | - | 1 | 2 |
| TGKK1340-... | gear 7 AF sz 80/G400 1RS | 801 - 1000 | 400 | 720 | 80 | - | - | 1 | 2 |
| TGKK1350-... | gear 7 AF sz 100/G500 1RS | 1001 - 1200 | 500 | 920 | 180 | - | - | 1 | 4 |
| TGKK1360-... | gear 7 AF sz 120/G600 1RS | 1201 - 1400 | 600 | 1120 | 80 | - | - | 1 | 5 |
| TGKK1570-... | gear 7 AF sz 140/G700 2RS 70 70 | 1401 - 1600 | 700 | 1320 | 180 | 320 | - | 2 | 7 |
| TGKK1580-... | gear 7 AF sz 160/G700 2RS 70 | 1601 - 1800 | 700 | 1520 | 380 | 320 | - | 2 | 7 |
| TGKK1540-... | gear 7 AF sz 180/G1000 2RS 70 | 1801 - 2000 | 1000 | 1720 | 280 | 420 | - | 2 | 8 |
| TGKK1550-... | gear 7 AF sz 200/G1000 3RS 70 70 | 2001 - 2200 | 1000 | 1920 | 280 | 420 | 680 | 3 | 9 |
| TGKK1560-... | gear 7 AF sz 220/G1000 3RS 70 70 | 2201 - 2400 | 1000 | 2120 | 280 | 420 | 680 | 3 | 10 |
| TGKK1560-... | gear 7 AF sz 220/G1000 3RS 70 70 | 2201 - 2400 | 1000 | 2120 | 280 | 420 | 680 | 3 | 10 |

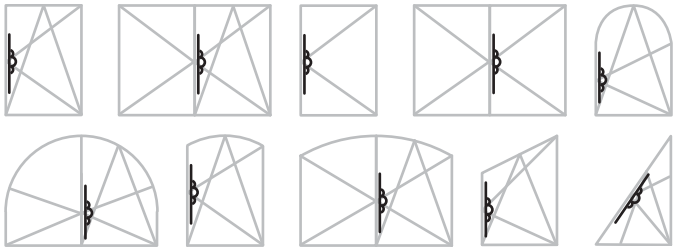

- Handle height constant
- The mishandling device TFBS0010 cannot be used with gears TGKK1320/1330
- Locking distance 700 mm

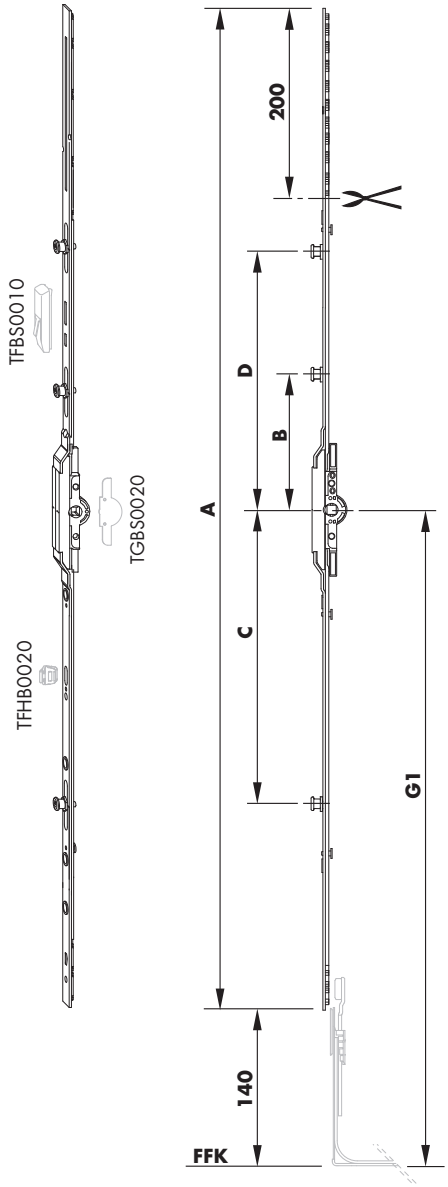

## Sales information

| Description | Part number | Surface | Colour | Box quantity |
|---|---|---|---|---|
| gear 7 AF sz 60/G300 | TGKK1320-10001_ | Titan Silver | without | 1 pc |
| | TGKK1320-10004_ | Titan Silver | without | 25 pcs |
| gear 7 AF sz 70/G300 1RS | TGKK1330-10001_ | Titan Silver | without | 1 pc |
| | TGKK1330-10004_ | Titan Silver | without | 25 pcs |
| gear 7 AF sz 80/G400 1RS | TGKK1340-10001_ | Titan Silver | without | 1 pc |
| | TGKK1340-10004_ | Titan Silver | without | 25 pcs |
| gear 7 AF sz 100/G500 1RS | TGKK1350-10001_ | Titan Silver | without | 1 pc |
| | TGKK1350-10004_ | Titan Silver | without | 25 pcs |
| gear 7 AF sz 120/G600 1RS | TGKK1360-10001_ | Titan Silver | without | 1 pc |
| | TGKK1360-10004_ | Titan Silver | without | 25 pcs |
| gear 7 AF sz 140/G700 2RS 70 70 | TGKK1570-10001_ | Titan Silver | without | 1 pc |
| | TGKK1570-10004_ | Titan Silver | without | 25 pcs |
| gear 7 AF sz 160/G700 2RS 70 | TGKK1580-10001_ | Titan Silver | without | 1 pc |
| | TGKK1580-10004_ | Titan Silver | without | 25 pcs |
| gear 7 AF sz 180/G1000 2RS 70 | TGKK1540-10001_ | Titan Silver | without | 1 pc |
| | TGKK1540-10002_ | Titan Silver | without | 10 pcs |
| gear 7 AF sz 200/G1000 3RS 70 70 | TGKK1550-10001_ | Titan Silver | without | 1 pc |
| | TGKK1550-10002_ | Titan Silver | without | 10 pcs |
| gear 7 AF sz 220/G1000 3RS 70 70 | TGKK1560-10001_ | Titan Silver | without | 1 pc |
| | TGKK1560-10002_ | Titan Silver | without | 10 pcs |
| | TGKK1560-10002_ | Titan Silver | without | 10 pcs |
| gear 7 AF sz 220/G1000 3RS 70 70 | TGKK1560-10001_ | Titan Silver | without | 1 pc |
| | TGKK1560-10002_ | Titan Silver | without | 10 pcs |
| | TGKK1560-10002_ | Titan Silver | without | 10 pcs |

## Technical information

| Part number | Description | FFH | Dimensions (mm) | | | | | |
|---|---|---|---|---|---|---|---|---|
| | | | G1 | A | B | C | | |
| TGKK1590-... | gear 7 AF sz 60/G250 FBS | - | 250 | 520 | - | - | 0 | 1 |
| TGKK1510-... | gear 7 AF sz 80/G250 1RS | 801 - 1000 | 250 | 720 | 230 | - | 1 | 2 |
| TGKK1410-... | gear 7 AF sz 80/G300 1RS | 801 - 1000 | 300 | 720 | 180 | - | 1 | 3 |
| TGKK1520-... | gear 7 AF sz 100/G250 1RS | 1001 - 1200 | 250 | 920 | 430 | - | 1 | 3 |
| TGKK1420-... | gear 7 AF sz 100/G300 1RS | 1001 - 1200 | 300 | 920 | 380 | - | 1 | 4 |
| TGKK1430-... | gear 7 AF sz 100/G400 1RS | 1001 - 1200 | 400 | 920 | 280 | - | 1 | 4 |
| TGKK1440-... | gear 7 AF sz 120/G300 1RS | 1201 - 1400 | 300 | 1120 | 380 | - | 1 | 5 |
| TGKK1450-... | gear 7 AF sz 120/G400 1RS | 1201 - 1400 | 400 | 1120 | 280 | - | 1 | 6 |
| TGKK1460-... | gear 7 AF sz 120/G500 1RS | 1201 - 1400 | 500 | 1120 | 180 | - | 1 | 5 |
| TGKK1470-... | gear 7 AF sz 140/G500 1RS | 1401 - 1600 | 500 | 1320 | 280 | - | 1 | 6 |
| TGKK1480-... | gear 7 AF sz 140/G600 1RS | 1401 - 1600 | 600 | 1320 | 180 | - | 1 | 7 |
| TGKK1530-... | gear 7 AF sz 180/G800 2RS | 1600 - 2000 | 800 | 1720 | 580 | 220 | 2 | 8 |

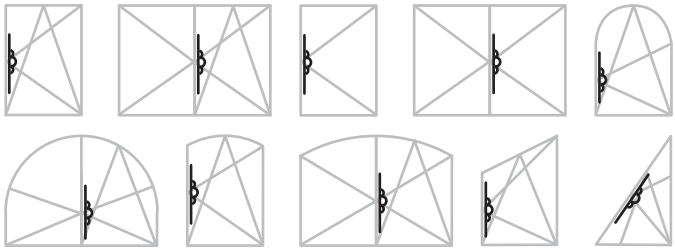

- Handle height constant

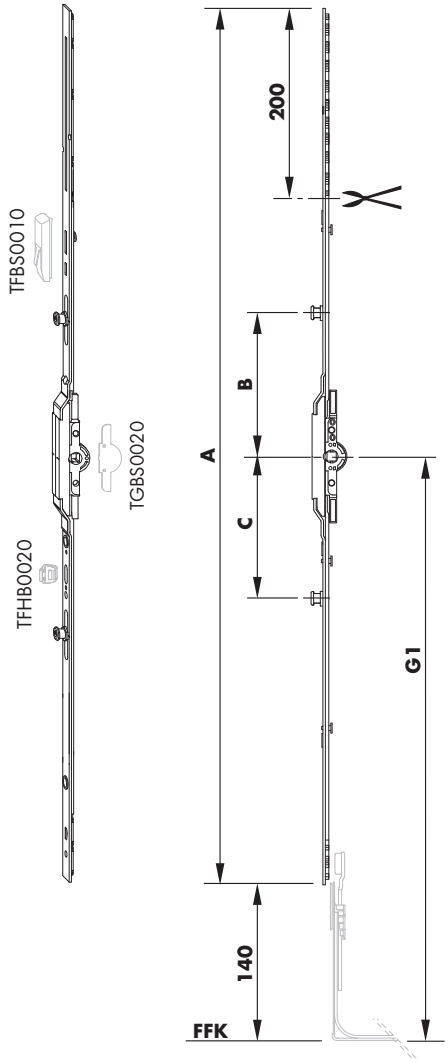

## Sales information

| Description | Part number | Surface | Colour | Box quantity |
|---|---|---|---|---|
| gear 7 AF sz 60/G250 FBS | TGKK1590-10001_ | Titan Silver | without | 1 pc |
| | TGKK1590-10004_ | Titan Silver | without | 25 pcs |
| gear 7 AF sz 80/G250 1RS | TGKK1510-10001_ | Titan Silver | without | 1 pc |
| | TGKK1510-10004_ | Titan Silver | without | 25 pcs |
| gear 7 AF sz 80/G300 1RS | TGKK1410-10001_ | Titan Silver | without | 1 pc |
| | TGKK1410-10004_ | Titan Silver | without | 25 pcs |
| gear 7 AF sz 100/G250 1RS | TGKK1520-10001_ | Titan Silver | without | 1 pc |
| | TGKK1520-10004_ | Titan Silver | without | 25 pcs |
| gear 7 AF sz 100/G300 1RS | TGKK1420-10001_ | Titan Silver | without | 1 pc |
| | TGKK1420-10004_ | Titan Silver | without | 25 pcs |
| gear 7 AF sz 100/G400 1RS | TGKK1430-10001_ | Titan Silver | without | 1 pc |
| | TGKK1430-10004_ | Titan Silver | without | 25 pcs |
| gear 7 AF sz 120/G300 1RS | TGKK1440-10001_ | Titan Silver | without | 1 pc |
| | TGKK1440-10004_ | Titan Silver | without | 25 pcs |
| gear 7 AF sz 120/G400 1RS | TGKK1450-10001_ | Titan Silver | without | 1 pc |
| | TGKK1450-10004_ | Titan Silver | without | 25 pcs |
| gear 7 AF sz 120/G500 1RS | TGKK1460-10001_ | Titan Silver | without | 1 pc |
| | TGKK1460-10004_ | Titan Silver | without | 25 pcs |
| gear 7 AF sz 140/G500 1RS | TGKK1470-10001_ | Titan Silver | without | 1 pc |
| | TGKK1470-10004_ | Titan Silver | without | 25 pcs |
| gear 7 AF sz 140/G600 1RS | TGKK1480-10001_ | Titan Silver | without | 1 pc |
| | TGKK1480-10004_ | Titan Silver | without | 25 pcs |
| gear 7 AF sz 180/G800 2RS | TGKK1530-10001_ | Titan Silver | without | 1 pc |
| | TGKK1530-10002_ | Titan Silver | without | 10 pcs |

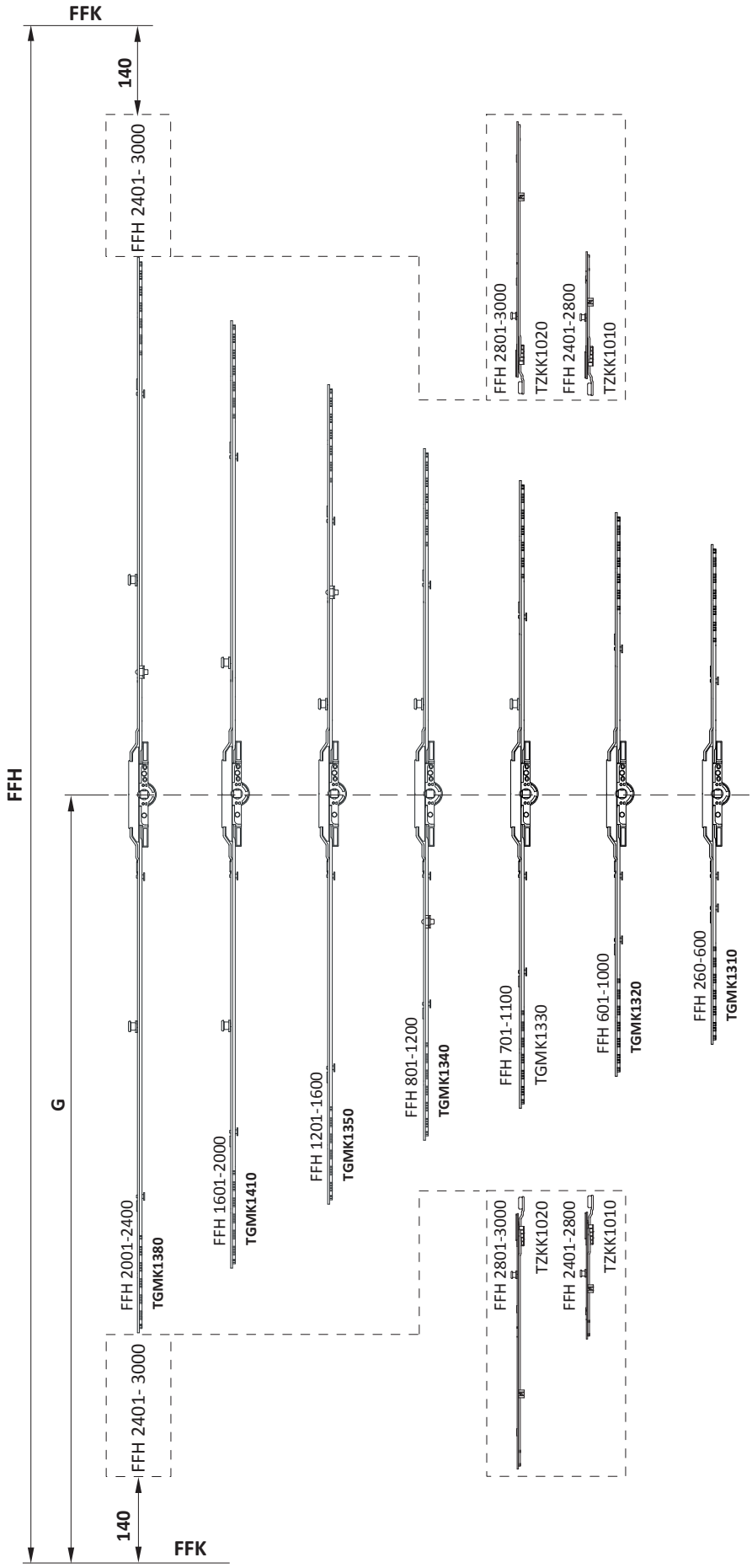
FFK
140
FFH 2401- 3000
FFH 2801-3000
TZKK1020
FFH 2401-2800
TZKK1010
FFH
G
FFH 2001-2400
TGMK1380
FFH 1601-2000
TGMK1410
FFH 1201-1600
TGMK1350
FFH 801-1200
TGMK1340
FFH 701-1100
TGMK1330
FFH 601-1000
TGMK1320
FFH 260-600
TGMK1310
FFH 2801-3000
TZKK1020
FFH 2401-2800
TZKK1010
FFH 2401- 3000
140
FFK

| Material number | Description | Material number | Description | FFH (mm) | G (mm) |
|---|---|---|---|---|---|
| **TGMK1310** | gear 7 AF sz 20 | | | 260 - 600 | 130 - 300 |
| **TGMK1320** | gear 7 AF sz 60 | | | 601 - 1000 | 300 - 500 |
| TGMK1330 | gear 7 AF sz 70 1RS | | | 701 - 1100 | 350 - 550 |
| **TGMK1340** | gear 7 AF sz 80 1RS | | | 801 - 1200 | 400 - 600 |
| **TGMK1350** | gear 7 AF sz 120 1RS | | | 1201 - 1600 | 600 - 800 |
| **TGMK1410** | gear 7 AF sz 160 2RS 70 | | | 1601 - 2000 | 800 - 1000 |
| **TGMK1380** | gear 7 AF sz 200 2RS | | | 2001 - 2400 | 1000 - 1200 |
| **TGMK1380** | gear 7 AF sz 200 2RS | **TZKK1010** | **2** linkages KK/AF sz 1 1RS | 2401 - 2800 | 1200 - 1400 |
| **TGMK1380** | gear 7 AF sz 200 2RS | **TZKK1020** | **2** linkages KK/AF sz 2 1RS | 2801 - 3000 | 1400 - 1500 |

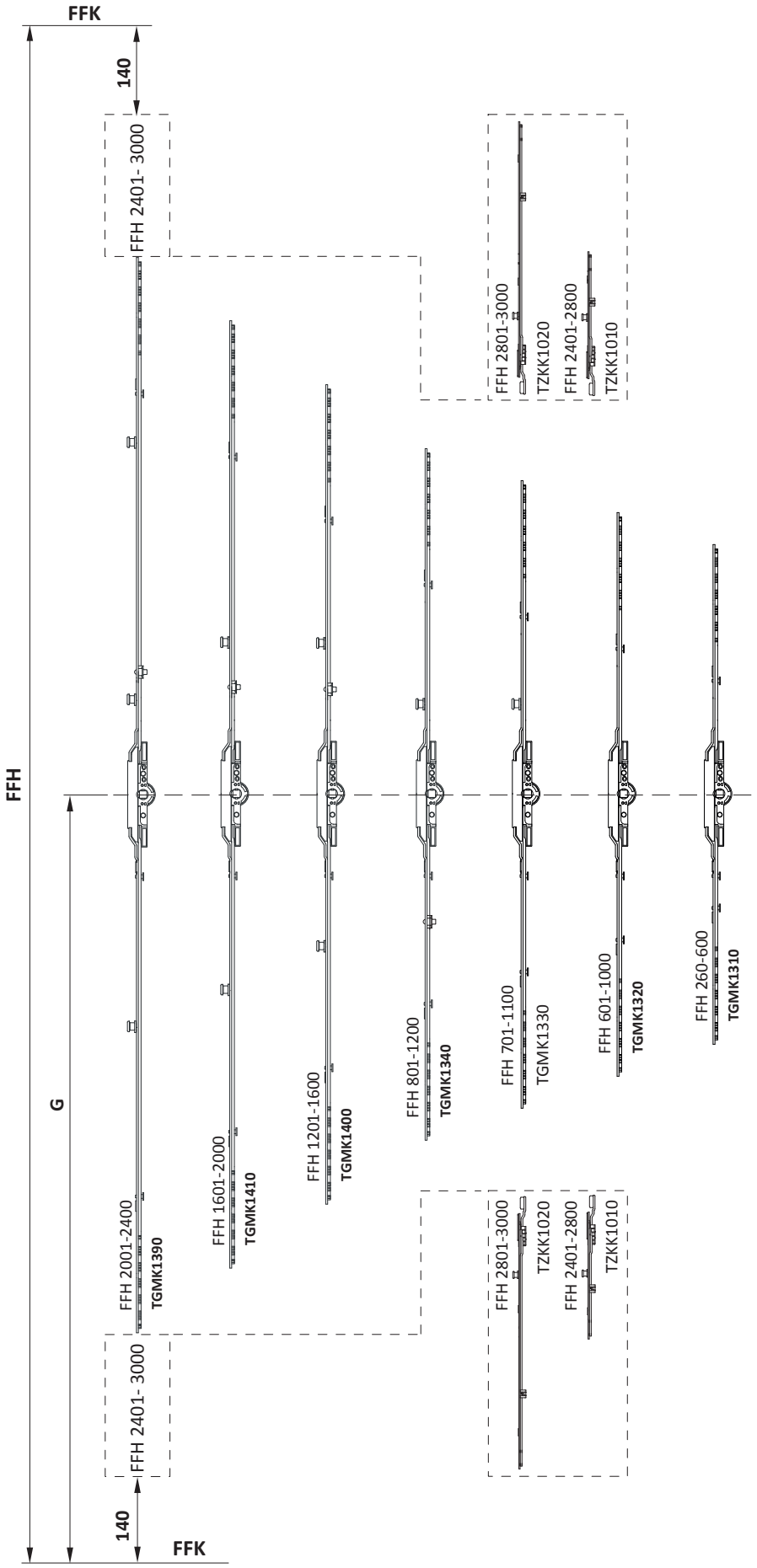
FFK
140
FFH 2401- 3000
FFH 2801-3000
TZKK1020
FFH 2401-2800
TZKK1010
FFH
G
FFH 2001-2400
TGMK1390
FFH 1601-2000
TGMK1410
FFH 1201-1600
TGMK1400
FFH 801-1200
TGMK1340
FFH 701-1100
TGMK1330
FFH 601-1000
TGMK1320
FFH 260-600
TGMK1310
FFH 2801-3000
TZKK1020
FFH 2401-2800
TZKK1010
FFH 2401- 3000
140
FFK

| Material-number | Description | Material number | Description | FFH (mm) | G (mm) |
|---|---|---|---|---|---|
| **TGMK1310** | gear 7 AF sz 20 | | | 260 - 600 | 130 - 300 |
| **TGMK1320** | gear 7 AF sz 60 | | | 601 - 1000 | 300 - 500 |
| **TGMK1340** | gear 7 AF sz 80 1RS | | | 801 - 1200 | 400 - 600 |
| **TGMK1400** | gear 7 AF sz 120 2RS 70 | | | 1201 - 1600 | 600 - 800 |
| **TGMK1410** | gear 7 AF sz 160 2RS 70 | | | 1601 - 2000 | 800 - 1000 |
| **TGMK1390** | gear 7 AF sz 200 3RS 70 | | | 2001 - 2400 | 1000 - 1200 |
| **TGMK1390** | gear 7 AF sz 200 3RS 70 | **TZKK1010** | **2** linkages KK/AF sz 1 1RS | 2401 - 2800 | 1200 - 1400 |
| **TGMK1390** | gear 7 AF sz 200 3RS 70 | **TZKK1020** | **2** linkages KK/AF sz 2 1RS | 2801 - 3000 | 1400 - 1500 |

## Technical information

| Part number | Description | FFH | Dimensions (mm) | | | | | |
|---|---|---|---|---|---|---|---|---|
| | | | G2 | A | B | C | | |
| TGMK1310-... | gear 7 AF sz 20 | 260 - 600 | 130 - 300 | 630 | - | - | 0 | 0 |
| TGMK1320-... | gear 7 AF sz 60 | 601 - 1000 | 300 - 500 | 720 | - | - | 0 | 2 |
| TGMK1330-... | gear 7 AF sz 70 1RS | 701 - 1100 | 350 - 550 | 820 | 80 | - | 1 | 2 |
| TGMK1340-... | gear 7 AF sz 80 1RS | 801 - 1200 | 400 - 600 | 920 | 80 | - | 1 | 2 |
| TGMK1350-... | gear 7 AF sz 120 1RS | 1201 - 1600 | 600 - 800 | 1320 | 80 | - | 1 | 5 |
| TGMK1410-... | gear 7 AF sz 160 2RS 70 | 1601 - 2000 | 800 - 1000 | 1720 | 280 | 408 | 2 | 7 |
| TGMK1380-... | gear 7 AF sz 200 2RS | 2001 - 3000 | 1000 - 1500 | 2120 | 392 | 408 | 2 | 9 |

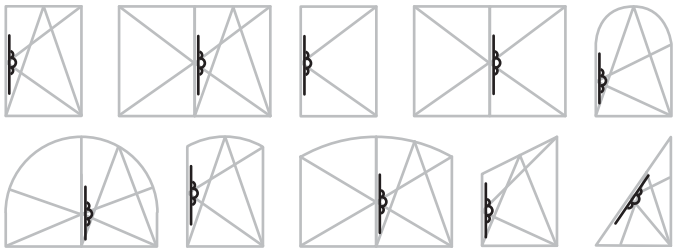

- Handle height centre/variable
- The mishandling device TFBS0010 cannot be used with gears TGMK1310/1320/1330

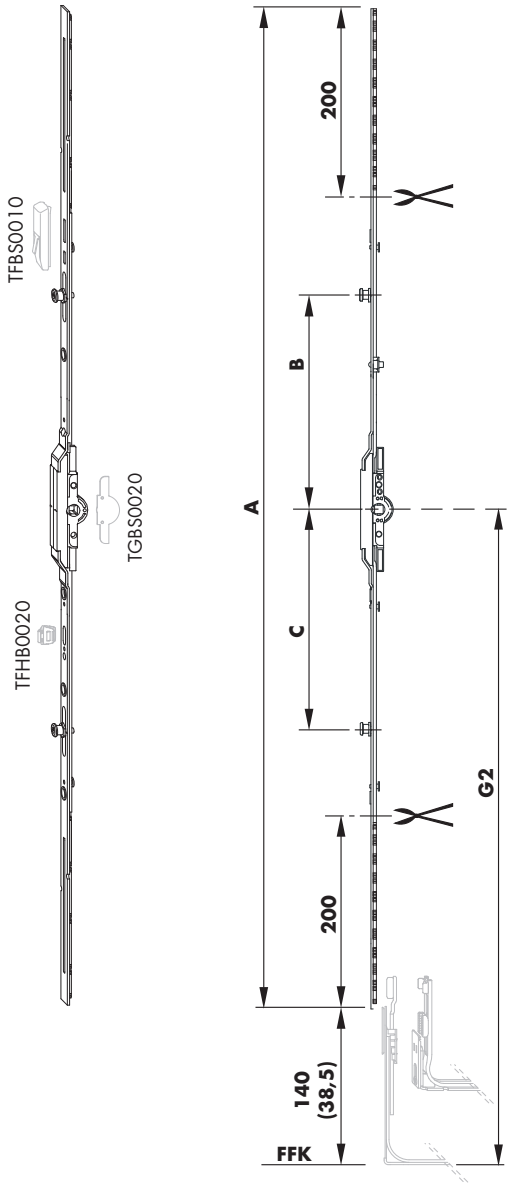

## Sales information

| Description | Part number | Surface | Colour | Box quantity |
|---|---|---|---|---|
| gear 7 AF sz 20 | TGMK1310-10001_ | Titan Silver | without | 1 pc |
| | TGMK1310-10004_ | Titan Silver | without | 25 pcs |
| gear 7 AF sz 60 | TGMK1320-10001_ | Titan Silver | without | 1 pc |
| | TGMK1320-10004_ | Titan Silver | without | 25 pcs |
| gear 7 AF sz 70 1RS | TGMK1330-10001_ | Titan Silver | without | 1 pc |
| | TGMK1330-10004_ | Titan Silver | without | 25 pcs |
| gear 7 AF sz 80 1RS | TGMK1340-10001_ | Titan Silver | without | 1 pc |
| | TGMK1340-10004_ | Titan Silver | without | 25 pcs |
| gear 7 AF sz 120 1RS | TGMK1350-10001_ | Titan Silver | without | 1 pc |
| | TGMK1350-10004_ | Titan Silver | without | 25 pcs |
| gear 7 AF sz 160 2RS 70 | TGMK1410-10001_ | Titan Silver | without | 1 pc |
| | TGMK1410-10002_ | Titan Silver | without | 10 pcs |
| gear 7 AF sz 200 2RS | TGMK1380-10001_ | Titan Silver | without | 1 pc |
| | TGMK1380-10002_ | Titan Silver | without | 10 pcs |

## Technical information

| Part number | Description | FFH | Dimensions (mm) | | | | | | |
|---|---|---|---|---|---|---|---|---|---|
| | | | G2 | A | B | C | D | | |
| TGMK1310-... | gear 7 AF sz 20 | 260 - 600 | 130 - 300 | 630 | - | - | - | 0 | 0 |
| TGMK1320-... | gear 7 AF sz 60 | 601 - 1000 | 300 - 500 | 720 | - | - | - | 0 | 2 |
| TGMK1330-... | gear 7 AF sz 70 1RS | 701 - 1100 | 350 - 550 | 820 | 80 | - | - | 1 | 2 |
| TGMK1340-... | gear 7 AF sz 80 1RS | 801 - 1200 | 400 - 600 | 920 | 80 | - | - | 1 | 2 |
| TGMK1400-... | gear 7 AF sz 120 2RS 70 | 1201 - 1600 | 600 - 800 | 1320 | 280 | 320 | - | 2 | 6 |
| TGMK1410-... | gear 7 AF sz 160 2RS 70 | 1601 - 2000 | 800 - 1000 | 1720 | 280 | 408 | - | 2 | 7 |
| TGMK1390-... | gear 7 AF sz 200 3RS 70 | 2001 - 2400 | 1000 - 1200 | 2120 | 80 | 498 | 502 | 3 | 9 |

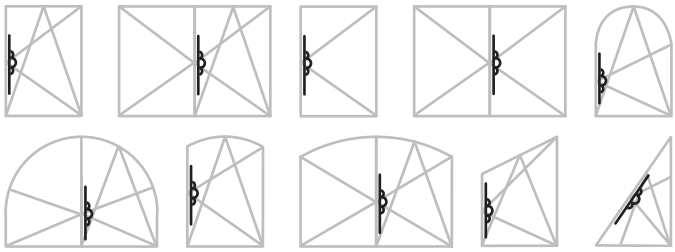

- Handle height centre/variable
- The mishandling device TFBS0010 cannot be used with gears TGMK1310/1320/1330
- Locking distance 700 mm

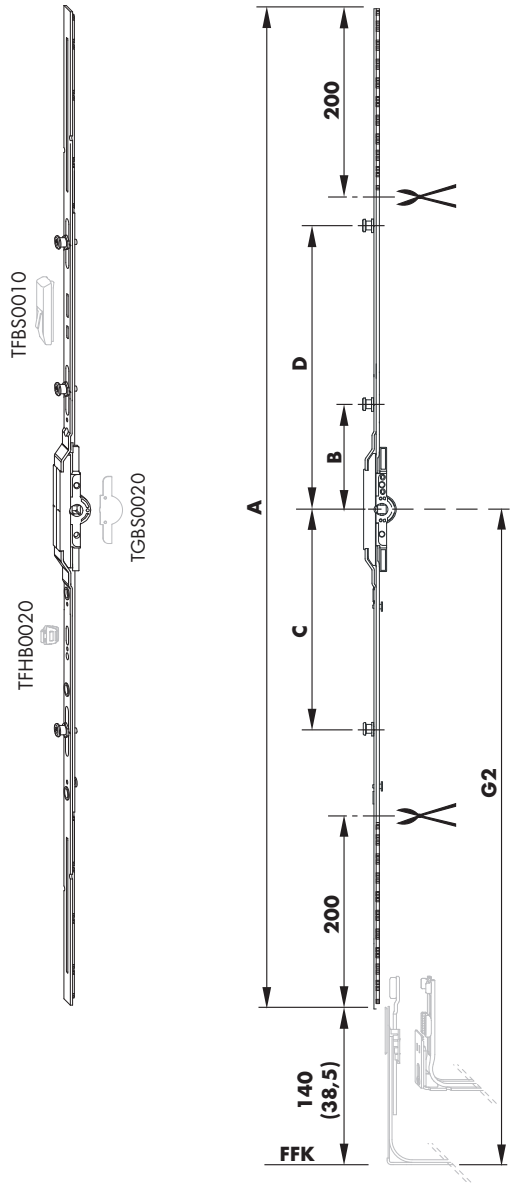

## Sales information

| Description | Part number | Surface | Colour | Box quantity |
|---|---|---|---|---|
| gear 7 AF sz 20 | TGMK1310-10001_ | Titan Silver | without | 1 pc |
| | TGMK1310-10004_ | Titan Silver | without | 25 pcs |
| gear 7 AF sz 60 | TGMK1320-10001_ | Titan Silver | without | 1 pc |
| | TGMK1320-10004_ | Titan Silver | without | 25 pcs |
| gear 7 AF sz 70 1RS | TGMK1330-10001_ | Titan Silver | without | 1 pc |
| | TGMK1330-10004_ | Titan Silver | without | 25 pcs |
| gear 7 AF sz 80 1RS | TGMK1340-10001_ | Titan Silver | without | 1 pc |
| | TGMK1340-10004_ | Titan Silver | without | 25 pcs |
| gear 7 AF sz 120 2RS 70 | TGMK1400-10001_ | Titan Silver | without | 1 pc |
| | TGMK1400-10004_ | Titan Silver | without | 25 pcs |
| gear 7 AF sz 160 2RS 70 | TGMK1410-10001_ | Titan Silver | without | 1 pc |
| | TGMK1410-10002_ | Titan Silver | without | 10 pcs |
| gear 7 AF sz 200 3RS 70 | TGMK1390-10001_ | Titan Silver | without | 1 pc |
| | TGMK1390-10002_ | Titan Silver | without | 10 pcs |

| Description | Material | Page |
|---|---|---|
| Application matrix:<br>sec. sash gear 16 AF, handle height constant | | 3.3 - 2 |
| Application matrix:<br>sec. sash gear 16 AF, handle height constant, locking distance 700 mm | | 3.3 - 4 |
| sec. sash gear 16 GK | TGKS0170 | 3.3 - 6 |
| sec. sash gear 16 GK | TGKS0010 | 3.3 - 7 |
| sec. sash gear 16 AF GK | TGKS4030, TGKS4040 | 3.3 - 8 |
| sec. sash gear 16 AF GK | TGKS4050, TGKS4060, TGKS4070, TGKS4080, TGKS4330, TGKS4270, TGKS4110 | 3.3 - 9 |
| sec. sash gear 16 AF GK 700 | TGKS4050, TGKS4060, TGKS4070, TGKS4290, TGKS4330, TGKS4270, TGKS4280, TGKS4320 | 3.3 - 11 |
| sec. sash gear 16 AF GK | TGKS4120 | 3.3 - 13 |
| sec. sash gear 16 AF GK | TGKS4130, TGKS4140, TGKS4150, TGKS4160 | 3.3 - 14 |
| Application matrix:<br>sec. sash gear 16 AF, handle height centre/variable | | 3.3 - 16 |
| Application matrix:<br>sec. sash gear 16 AF, handle height centre/variable, locking distance 700 mm | | 3.3 - 18 |
| sec. sash gear 16 AF GM | TGMS4030, TGMS4040, TGMS4050, TGMS4120, TGMS4130, TGMS4080 | 3.3 - 20 |
| sec. sash gear 16 AF GM 700 | TGMS4030, TGMS4040, TGMS4120, TGMS4130, TGMS4100 | 3.3 - 22 |

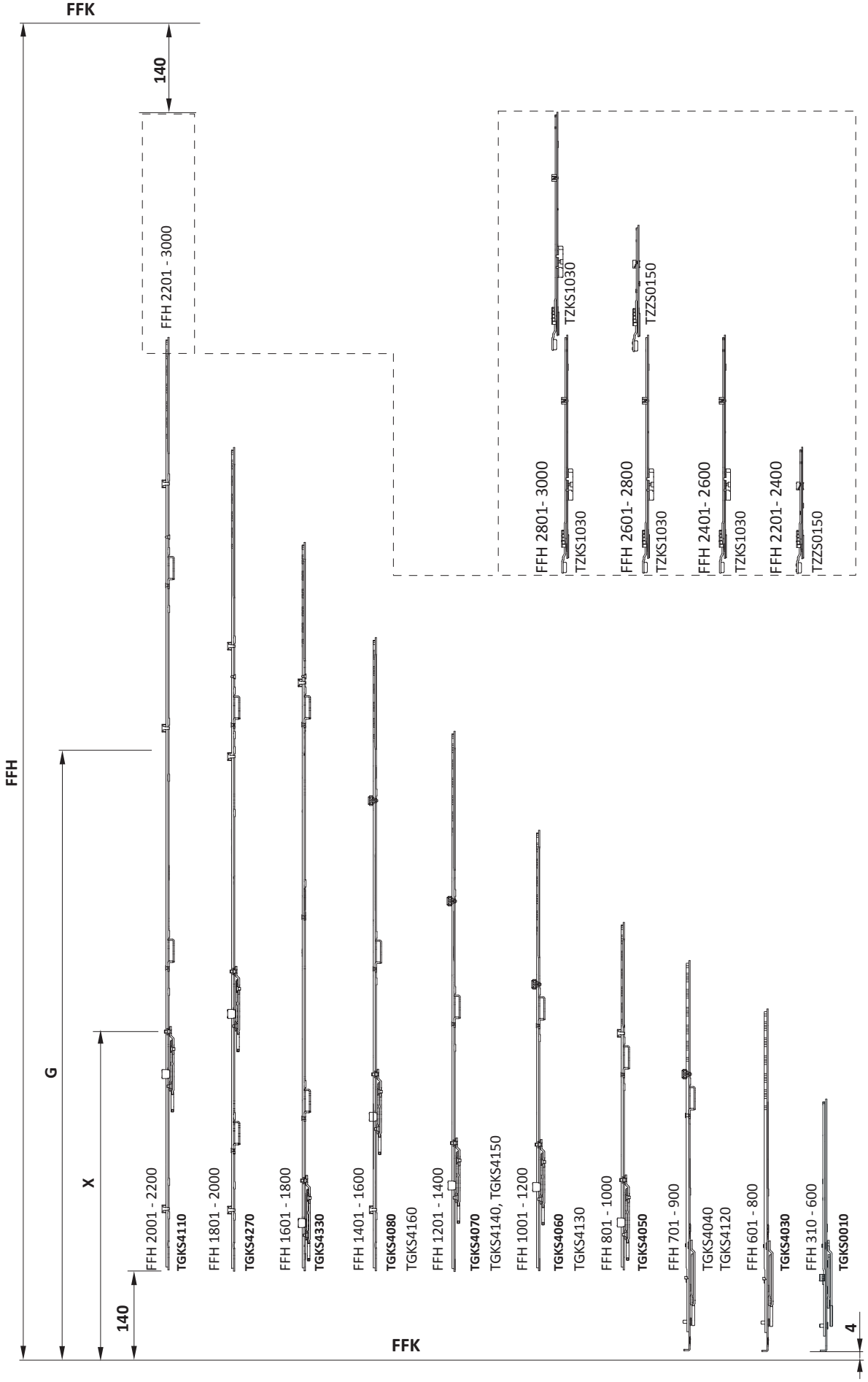
FFK
140
FFH
G
X
140
FFK
4
FFH 2201 - 3000
FFH 2001 - 2200
TGKS4110
FFH 1801 - 2000
TGKS4270
FFH 1601 - 1800
TGKS4330
FFH 1401 - 1600
TGKS4080
TGKS4160
FFH 1201 - 1400
TGKS4070
TGKS4140, TGKS4150
FFH 1001 - 1200
TGKS4060
TGKS4130
FFH 801 - 1000
TGKS4050
FFH 701 - 900
TGKS4040
TGKS4120
FFH 601 - 800
TGKS4030
FFH 310 - 600
TGKS0010
FFH 2801- 3000
TZKS1030
TZKS1030
FFH 2601- 2800
TZZS0150
TZKS1030
FFH 2401- 2600
TZKS1030
FFH 2201- 2400
TZZS0150

3.3

| Material number | Description | Material number | Description | FFH (mm) | X (mm) | G (mm) In the main sash |
|---|---|---|---|---|---|---|
| **TGKS0010** | sec. sash gear 16 sz 30/G180 | | | 310 - 600 | 168 | 180 |
| **TGKS4030** | sec. sash gear 16 AF sz 60/G300 | | | 601 - 800 | 168 | 300 |
| TGKS4040 | sec. sash gear 16 AF sz 70/G300 1SB | | | 701 - 900 | 168 | 300 |
| **TGKS4050** | sec. sash gear 16 AF sz 80/G400 1SB | | | 801 - 1000 | 305 | 400 |
| TGKS4120 | sec. sash gear 16 AF sz 80/G300 1SB | | | 801 - 1000 | 168 | 300 |
| **TGKS4060** | sec. sash gear 16 AF sz 100/G500 1SB | | | 1001 - 1200 | 430 | 500 |
| TGKS4130 | sec. sash gear 16 AF sz 100/G300 1SB | | | 1001 - 1200 | 600 | 300 |
| **TGKS4070** | sec. sash gear 16 AF sz 120/G600 1SB | | | 1201 - 1400 | 430 | 600 |
| TGKS4140 | sec. sash gear 16 AF sz 120/G300 1SB | | | 1201 - 1400 | 590 | 300 |
| TGKS4150 | sec. sash gear 16 AF sz 120/G400 1SB | | | 1201 - 1400 | 300 | 400 |
| **TGKS4080** | sec. sash gear 16 AF sz 140/G700 1SB | | | 1401 - 1600 | 600 | 700 |
| TGKS4160 | sec. sash gear 16 AF sz 140/G500 1SB | | | 1401 - 1600 | 300 | 500 |
| **TGKS4330** | sec. sash gear 16 AF sz 160/G700 2SB 70 | | | 1601 - 1800 | 300 | 700 |
| **TGKS4270** | sec. sash gear 16 AF sz 180/G1000 2SB 70 | | | 1801 - 2000 | 910 | 1000 |
| **TGKS4110** | sec. sash gear 16 AF sz 200/G1000 2SB | | | 2001 - 2200 | 680 | 1000 |
| **TGKS4110** | sec. sash gear 16 AF sz 200/G1000 2SB | **TZZS0150** | linkage AF sz 1 | 2201 - 2400 | 680 | 1000 |
| **TGKS4110** | sec. sash gear 16 AF sz 200/G1000 2SB | **TZKS1030** | linkage AF sz 2 1SB-RS | 2401 - 2600 | 680 | 1000 |
| **TGKS4110** | sec. sash gear 16 AF sz 200/G1000 2SB | **TZKS1030** | linkage AF sz 2 1SB-RS | 2601 - 2800 | 680 | 1000 |
| | | **TZZS0150** | linkage AF sz 1 | | | |
| **TGKS4110** | sec. sash gear 16 AF sz 200/G1000 2SB | **TZKS1030** | linkage AF sz 2 1SB-RS | 2801 - 3000 | 680 | 1000 |
| | | **TZKS1030** | linkage AF sz 2 1SB-RS | | | |

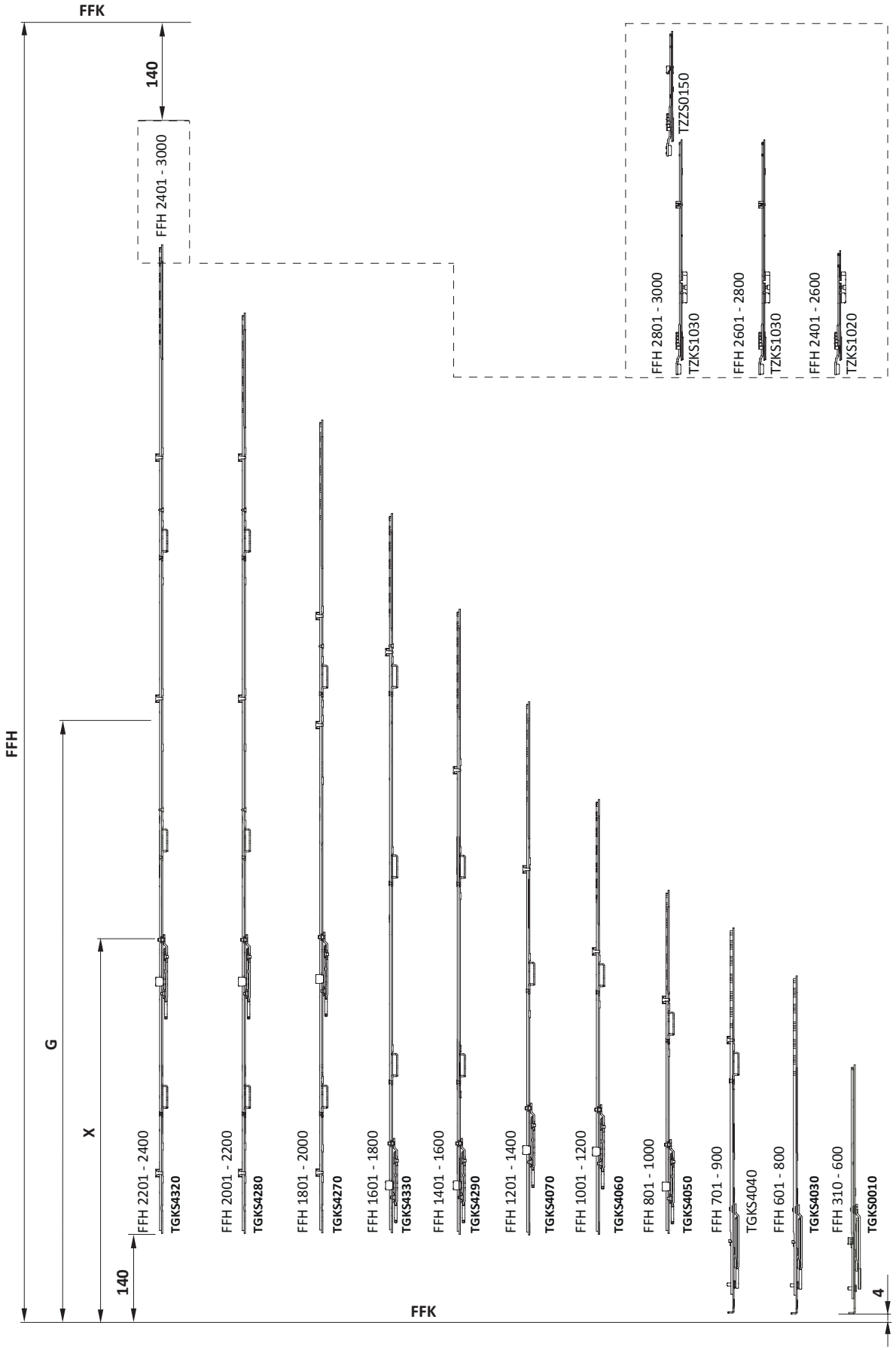
FFK
140
FFH 2401 - 3000
FFH
G
X
140
FFK
4
FFH 2201 - 2400
TGKS4320
FFH 2001 - 2200
TGKS4280
FFH 1801 - 2000
TGKS4270
FFH 1601 - 1800
TGKS4330
FFH 1401 - 1600
TGKS4290
FFH 1201 - 1400
TGKS4070
FFH 1001 - 1200
TGKS4060
FFH 801 - 1000
TGKS4050
FFH 701 - 900
TGKS4040
FFH 601 - 800
TGKS4030
FFH 310 - 600
TGKS0010
FFH 2801 - 3000
TZKS1030
TZZS0150
FFH 2601 - 2800
TZKS1030
FFH 2401 - 2600
TZKS1020

| Material number | Description | Material number | Description | FFH (mm) | X (mm) | G (mm) In the main sash |
|---|---|---|---|---|---|---|
| **TGKS0010** | sec. sash gear 16 sz 30/G180 | | | 310 - 600 | 168 | 180 |
| **TGKS4030** | sec. sash gear 16 AF sz 60/G300 | | | 601 - 800 | 168 | 300 |
| **TGKS4040** | sec. sash gear 16 AF sz 70/G300 1SB | | | 701 - 900 | 168 | 300 |
| **TGKS4050** | sec. sash gear 16 AF sz 80/G400 1SB | | | 801 - 1000 | 305 | 400 |
| **TGKS4060** | sec. sash gear 16 AF sz 100/G500 1SB | | | 1001 - 1200 | 430 | 500 |
| **TGKS4070** | sec. sash gear 16 AF sz 120/G600 1SB | | | 1201 - 1400 | 430 | 600 |
| **TGKS4290** | sec. sash gear 16 AF sz 140/G700 2SB 70 | | | 1401 - 1600 | 300 | 700 |
| **TGKS4330** | sec. sash gear 16 AF sz 160/G700 2SB 70 | | | 1601 - 1800 | 300 | 700 |
| **TGKS4270** | sec. sash gear 16 AF sz 180/G1000 2SB 70 | | | 1801 - 2000 | 910 | 1000 |
| **TGKS4280** | sec. sash gear 16 AF sz 200/G1000 3SB 70 | | | 2001 - 2200 | 910 | 1000 |
| **TGKS4320** | sec. sash gear 16 AF sz 220/G1000 3SB 70 | | | 2201 - 2400 | 910 | 1000 |
| **TGKS4320** | sec. sash gear 16 AF sz 220/G1000 3SB 70 | **TZKS1020** | linkage AF sz 1 1SB-RS | 2401 - 2600 | 910 | 1000 |
| **TGKS4320** | sec. sash gear 16 AF sz 220/G1000 3SB 70 | **TZKS1030** | linkage AF sz 2 1SB-RS | 2601 - 2800 | 910 | 1000 |
| **TGKS4320** | sec. sash gear 16 AF sz 220/G1000 3SB 70 | **TZKS1030** | linkage AF sz 2 1SB-RS | 2801 - 3000 | 910 | 1000 |
| | | **TZZS0150** | linkage AF sz 1 | | | |

## Technical information

| Part number | Description | FFH | Dimensions (mm) | | | | | |
|---|---|---|---|---|---|---|---|---|
| | | | A | B | C | X | | |
| TGKS0170-... | sec.sash gear 16 sz 30+ 1RS | 310 - 600 | 497 | 210 | 120 | 100 | 1 | 4 |

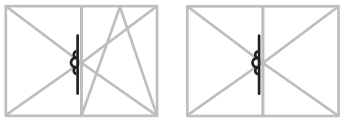

- Handle height constant
- Use in slave sashes with opposing fitting groove
- Coupling location to slide underneath
- Suitable for product range TITAN iP and TITAN AF

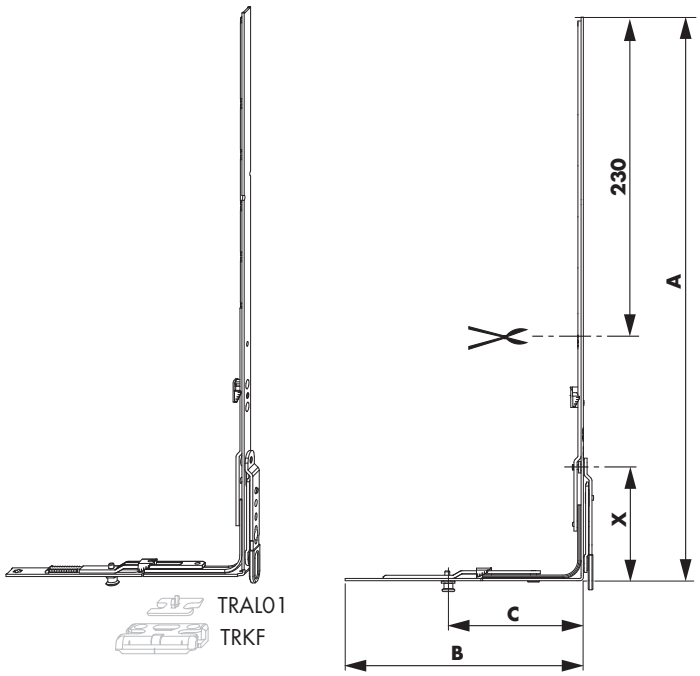


## Sales information

| Description | Part number | Surface | Colour | Box quantity |
|---|---|---|---|---|
| sec.sash gear 16 sz 30+ 1RS | TGKS0170-10001_ | Titan Silver | without | 1 pc |
| | TGKS0170-10004_ | Titan Silver | without | 25 pcs |

## Technical information

| Part number | Description | Dimensions (mm) | | | | |
|---|---|---|---|---|---|---|
| | | G1 | A | X | | |
| TGKS0010-... | sec.sash gear 16 sz 30 | 180 | 495 | 168 | 0 | 2 |

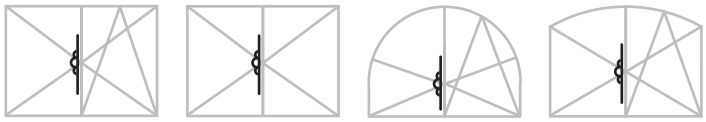

- Handle height constant
- Use in slave sashes with opposing fitting groove
- G1 in the main sash
- Suitable for product range TITAN iP and TITAN AF
- When used with TITAN AF the gear must be shortened by 30.5 mm
- TITAN AF FFH (mm) 310-600
- TITAN iP FFH (mm) 295-495

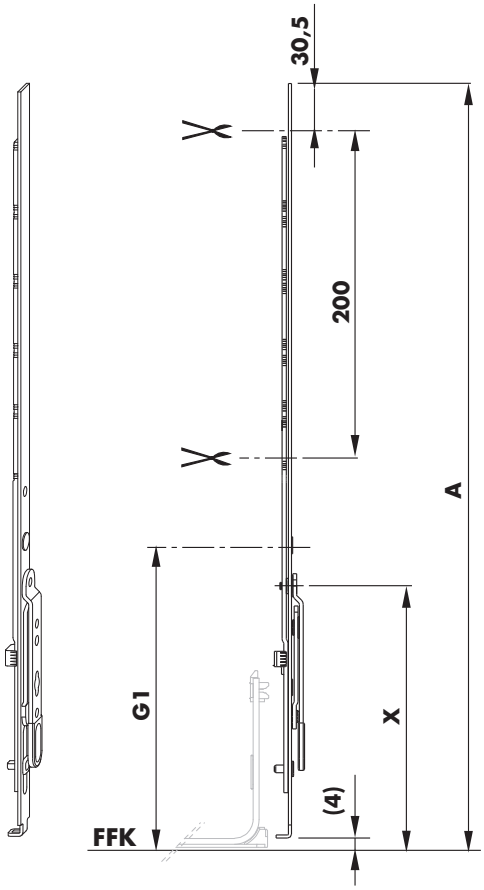


## Sales information

| Description | Part number | Surface | Colour | Box quantity |
|---|---|---|---|---|
| sec.sash gear 16 sz 30 | TGKS0010-10001_ | Titan Silver | without | 1 pc |
| | TGKS0010-10004_ | Titan Silver | without | 25 pcs |

## Technical information

| Part number | Description | Dimensions (mm) | | | | |
|---|---|---|---|---|---|---|
| | | G1 | A | X | | |
| TGKS4030-... | sec.sash gear 16 AF 60/G300 | 300 | 660 | 168 | 0 | 3 |
| TGKS4040-... | sec.sash gear 16 AF70/G300 1SB | 300 | 760 | 168 | 0 | 4 |

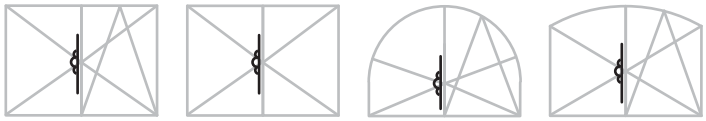

- Handle height constant
- Use in slave sashes with opposing fitting groove
- Striker plate with locking slider
- G1 in the main sash

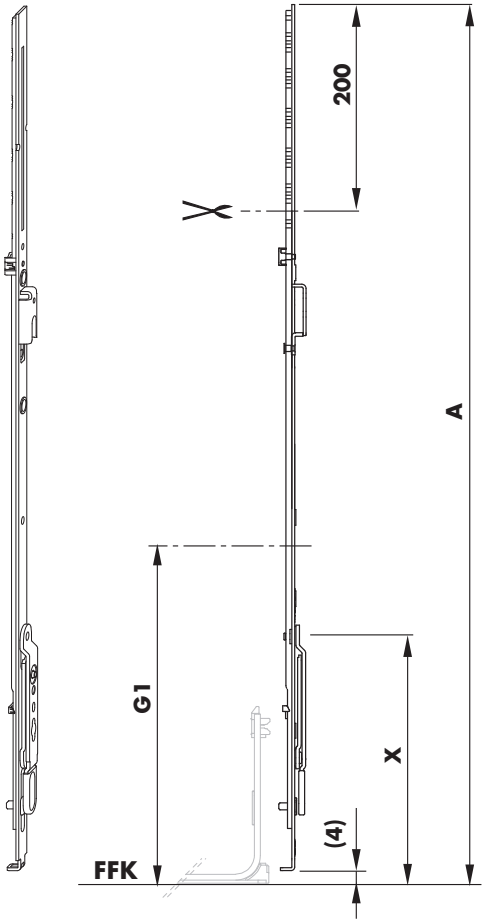


## Sales information

| Description | Part number | Surface | Colour | Box quantity |
|---|---|---|---|---|
| sec.sash gear 16 AF 60/G300 | TGKS4030-10001_ | Titan Silver | without | 1 pc |
| | TGKS4030-10004_ | Titan Silver | without | 25 pcs |
| sec.sash gear 16 AF70/G300 1SB | TGKS4040-10001_ | Titan Silver | without | 1 pc |
| | TGKS4040-10004_ | Titan Silver | without | 25 pcs |

## Technical information

| Part number | Description | FFH | Dimensions (mm) | | | | |
|---|---|---|---|---|---|---|---|
| | | | G1 | A | X | | |
| TGKS4050-... | sec.sash gear 16 AF80/G400 1SB | 801 - 1000 | 400 | 720 | 165 | 0 | 4 |
| TGKS4060-... | sec.sash gear 16 AF sz 100 1SB | 1001 - 1200 | 500 | 920 | 290 | 0 | 5 |
| TGKS4070-... | sec.sash gear 16 AF120/G6001SB | 1201 - 1400 | 600 | 1120 | 290 | 0 | 6 |
| TGKS4080-... | sec.sash gear 16 AF140/G7001SB | 1401 - 1600 | 700 | 1320 | 460 | 0 | 7 |
| TGKS4330-... | sec.sash gear 16 AF160/G7002SB 70 | 1601 - 1800 | 700 | 1520 | 160 | 0 | 8 |
| TGKS4270-... | sec.sash gear 16AF180/G10002SB 70 | 1801 - 2000 | 1000 | 1720 | 770 | 0 | 10 |
| TGKS4110-... | sec.sash gear 16AF200/G10002SB | 2001 - 3000 | 1000 | 1920 | 540 | 0 | 10 |

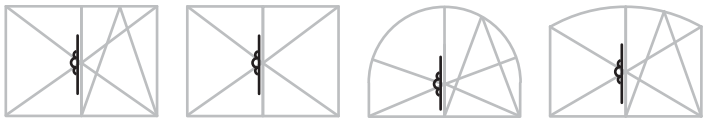

- Handle height constant
- Use in slave sashes with opposing fitting groove
- Striker plate with locking slider
- G1 in the main sash

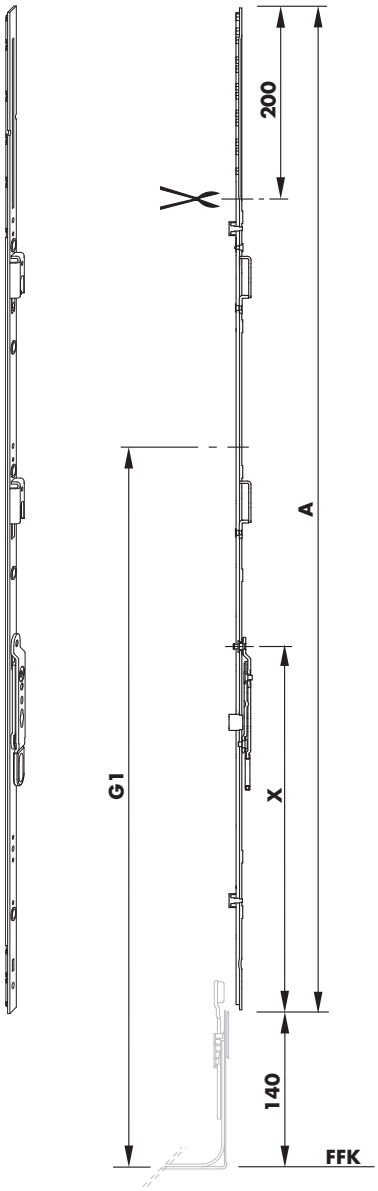

## Sales information

| Description | Part number | Surface | Colour | Box quantity |
|---|---|---|---|---|
| sec.sash gear 16 AF80/G400 1SB | TGKS4050-10001_ | Titan Silver | without | 1 pc |
| | TGKS4050-10004_ | Titan Silver | without | 25 pcs |
| sec.sash gear 16 AF sz 100 1SB | TGKS4060-10001_ | Titan Silver | without | 1 pc |
| | TGKS4060-10004_ | Titan Silver | without | 25 pcs |
| sec.sash gear 16 AF120/G6001SB | TGKS4070-10001_ | Titan Silver | without | 1 pc |
| | TGKS4070-10004_ | Titan Silver | without | 25 pcs |
| sec.sash gear 16 AF140/G7001SB | TGKS4080-10001_ | Titan Silver | without | 1 pc |
| | TGKS4080-10004_ | Titan Silver | without | 25 pcs |
| sec.sash gear 16 AF160/G7002SB 70 | TGKS4330-10001_ | Titan Silver | without | 1 pc |
| | TGKS4330-10004_ | Titan Silver | without | 25 pcs |
| sec.sash gear 16AF180/G10002SB 70 | TGKS4270-10001_ | Titan Silver | without | 1 pc |
| | TGKS4270-10002_ | Titan Silver | without | 10 pcs |
| sec.sash gear 16AF200/G10002SB | TGKS4110-10001_ | Titan Silver | without | 1 pc |
| | TGKS4110-10002_ | Titan Silver | without | 10 pcs |

## Technical information

| Part number | Description | FFH | Dimensions (mm) | | | | |
|---|---|---|---|---|---|---|---|
| | | | G1 | A | X | | |
| TGKS4050-... | sec.sash gear 16 AF80/G400 1SB | 801 - 1000 | 400 | 720 | 165 | 0 | 4 |
| TGKS4060-... | sec.sash gear 16 AF sz 100 1SB | 1001 - 1200 | 500 | 920 | 290 | 0 | 5 |
| TGKS4070-... | sec.sash gear 16 AF120/G6001SB | 1201 - 1400 | 600 | 1120 | 290 | 0 | 6 |
| TGKS4290-... | sec.sash gear 16 AF140/G700 2S 70 | 1401 - 1600 | 700 | 1320 | 160 | 0 | 7 |
| TGKS4330-... | sec.sash gear 16 AF160/G7002SB 70 | 1601 - 1800 | 700 | 1520 | 160 | 0 | 8 |
| TGKS4270-... | sec.sash gear 16AF180/G10002SB 70 | 1801 - 2000 | 1000 | 1720 | 770 | 0 | 10 |
| TGKS4280-... | sec.sash gear 16 AF200/G1000 3 70 | 2001 - 2200 | 1000 | 1920 | 770 | 0 | 11 |
| TGKS4320-... | sec.sash gear 16 AF220/G1000 3 70 | 2201 - 3000 | 1000 | 2120 | 770 | 0 | 12 |

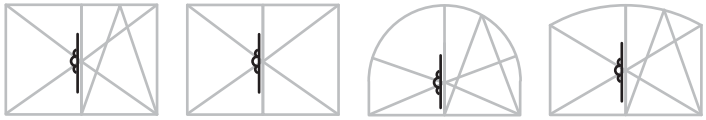

- Handle height constant
- Locking distance 700 mm
- Use in slave sashes with opposing fitting groove
- Striker plate with locking slider
- G1 in the main sash

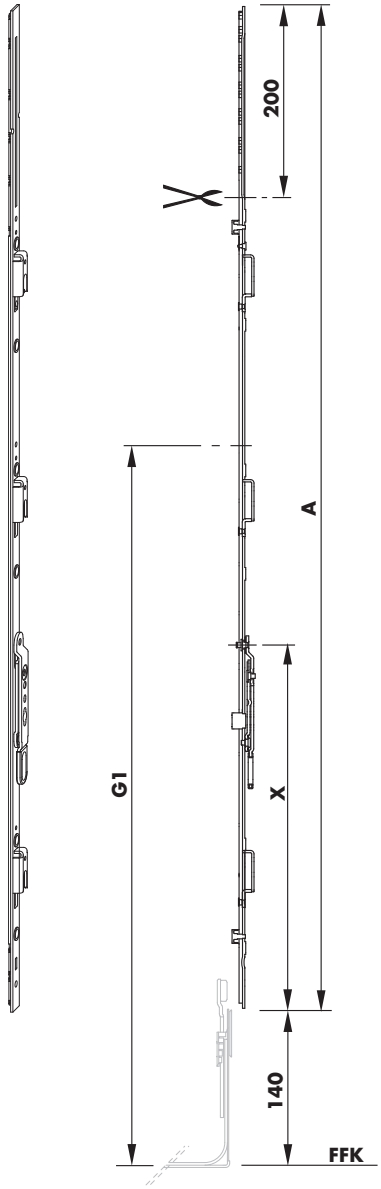

## Sales information

| Description | Part number | Surface | Colour | Box quantity |
|---|---|---|---|---|
| sec.sash gear 16 AF80/G400 1SB | TGKS4050-10001_ | Titan Silver | without | 1 pc |
| | TGKS4050-10004_ | Titan Silver | without | 25 pcs |
| sec.sash gear 16 AF sz 100 1SB | TGKS4060-10001_ | Titan Silver | without | 1 pc |
| | TGKS4060-10004_ | Titan Silver | without | 25 pcs |
| sec.sash gear 16 AF120/G6001SB | TGKS4070-10001_ | Titan Silver | without | 1 pc |
| | TGKS4070-10004_ | Titan Silver | without | 25 pcs |
| sec.sash gear 16 AF140/G700 2S 70 | TGKS4290-10001_ | Titan Silver | without | 1 pc |
| | TGKS4290-10004_ | Titan Silver | without | 25 pcs |
| sec.sash gear 16 AF160/G7002SB 70 | TGKS4330-10001_ | Titan Silver | without | 1 pc |
| | TGKS4330-10004_ | Titan Silver | without | 25 pcs |
| sec.sash gear 16AF180/G10002SB 70 | TGKS4270-10001_ | Titan Silver | without | 1 pc |
| | TGKS4270-10002_ | Titan Silver | without | 10 pcs |
| sec.sash gear 16 AF200/G1000 3 70 | TGKS4280-10001_ | Titan Silver | without | 1 pc |
| | TGKS4280-10002_ | Titan Silver | without | 10 pcs |
| sec.sash gear 16 AF220/G1000 3 70 | TGKS4320-10001_ | Titan Silver | without | 1 pc |
| | TGKS4320-10002_ | Titan Silver | without | 10 pcs |

## Technical information

| Part number | Description | Dimensions (mm) | | | | |
|---|---|---|---|---|---|---|
| | | G1 | A | X | | |
| TGKS4120-... | sec.sash gear 16 AF80/G300 1SB | 300 | 860 | 168 | 0 | 4 |

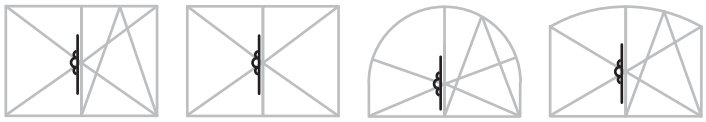

- Handle height constant
- Use in slave sashes with opposing fitting groove
- Striker plate with locking slider
- G1 in the main sash

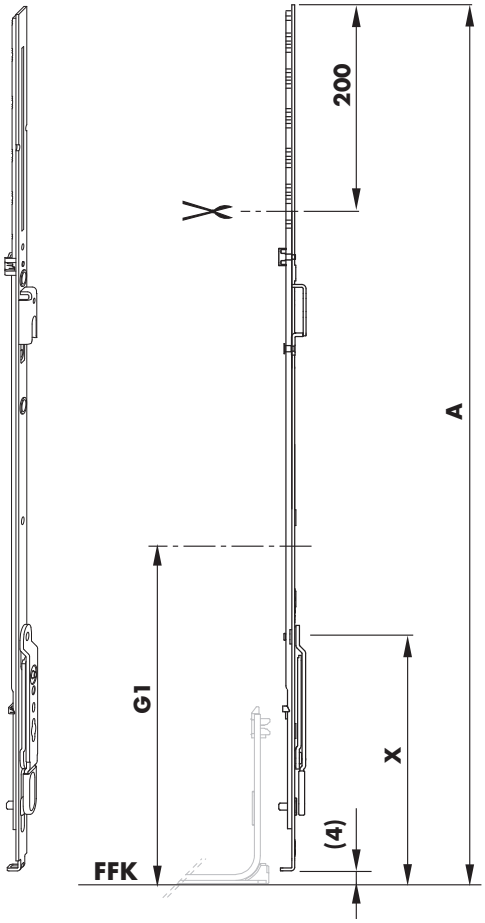


## Sales information

| Description | Part number | Surface | Colour | Box quantity |
|---|---|---|---|---|
| sec.sash gear 16 AF80/G300 1SB | TGKS4120-10001_ | Titan Silver | without | 1 pc |
| | TGKS4120-10004_ | Titan Silver | without | 25 pcs |

## Technical information

| Part number | Description | FFH | Dimensions (mm) | | | | |
|---|---|---|---|---|---|---|---|
| | | | G1 | A | X | | |
| TGKS4130-... | sec.sash gear 16 AF100/G3001SB | 1001 - 1200 | 300 | 920 | 460 | 0 | 5 |
| TGKS4140-... | sec.sash gear 16 AF120/G3001SB | 1201 - 1400 | 300 | 1120 | 450 | 0 | 5 |
| TGKS4150-... | sec.sash gear 16 AF120/G4001SB | 1201 - 1400 | 400 | 1120 | 160 | 0 | 6 |
| TGKS4160-... | sec.sash gear 16 AF140/G5001SB | 1401 - 1600 | 500 | 1320 | 160 | 0 | 6 |

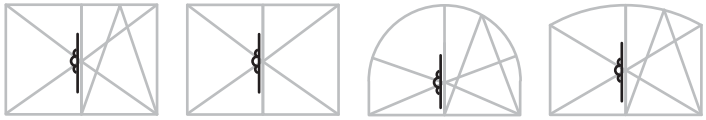

- Handle height constant
- Use in slave sashes with opposing fitting groove
- Striker plate with locking slider
- G1 in the main sash

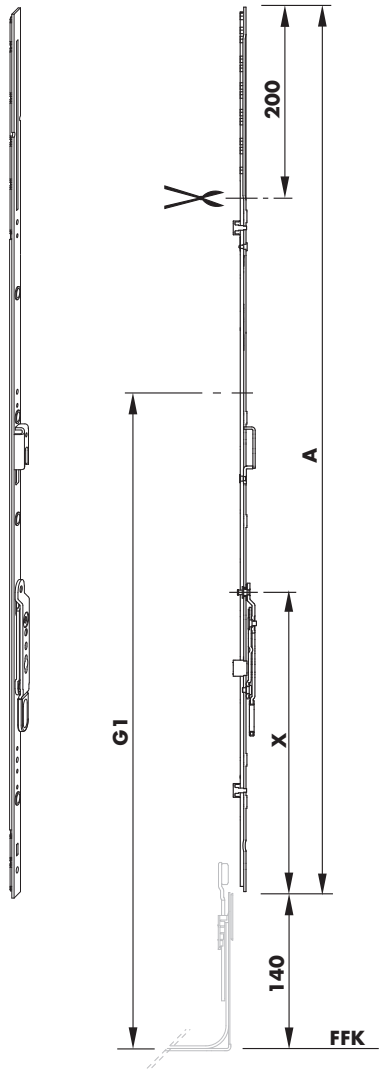

## Sales information

| Description | Part number | Surface | Colour | Box quantity |
|---|---|---|---|---|
| sec.sash gear 16 AF100/G3001SB | TGKS4130-10001_ | Titan Silver | without | 1 pc |
| | TGKS4130-10004_ | Titan Silver | without | 25 pcs |
| sec.sash gear 16 AF120/G3001SB | TGKS4140-10001_ | Titan Silver | without | 1 pc |
| | TGKS4140-10004_ | Titan Silver | without | 25 pcs |
| sec.sash gear 16 AF120/G4001SB | TGKS4150-10001_ | Titan Silver | without | 1 pc |
| | TGKS4150-10004_ | Titan Silver | without | 25 pcs |
| sec.sash gear 16 AF140/G5001SB | TGKS4160-10001_ | Titan Silver | without | 1 pc |
| | TGKS4160-10004_ | Titan Silver | without | 25 pcs |

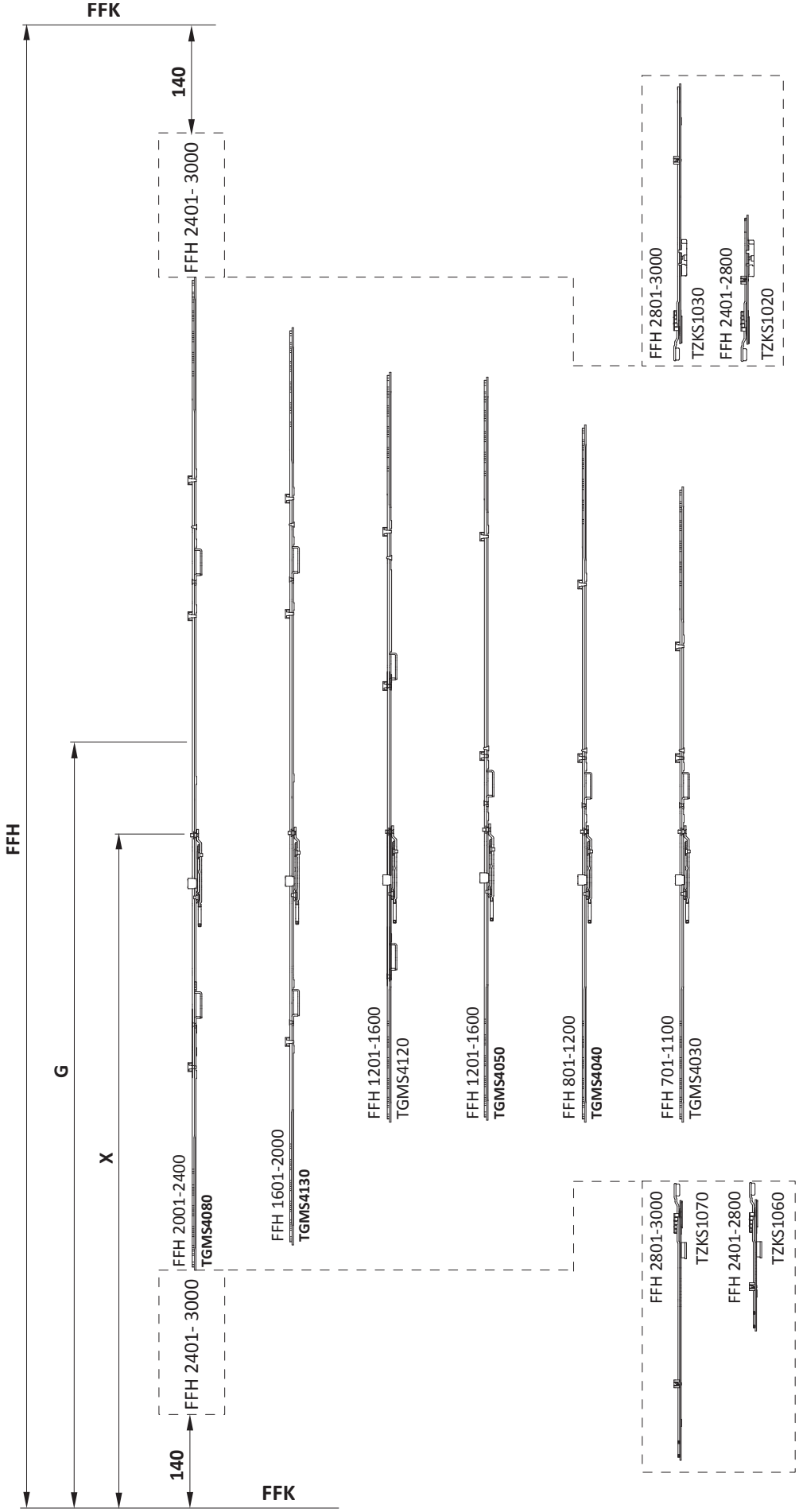
FFK
140
FFH 2401- 3000
FFH 2801-3000
TZKS1030
FFH 2401-2800
TZKS1020
FFH
G
X
FFH 2001-2400
TGMS4080
FFH 1601-2000
TGMS4130
FFH 1201-1600
TGMS4120
FFH 1201-1600
TGMS4050
FFH 801-1200
TGMS4040
FFH 701-1100
TGMS4030
FFH 2801-3000
TZKS1070
FFH 2401-2800
TZKS1060
FFH 2401- 3000
140
FFK

# Application matrix for sec. sash gear 16 AF

Handle height variable/centre



| Material number | Description | Material number | Description | FFH (mm) | x (mm) | G (mm) In the main sash |
|---|---|---|---|---|---|---|
| **TGMS4030** | sec. sash gear 16 AF sz 70 1SB | | | 701 - 1100 | 300 - 500 | 350 - 550 |
| **TGMS4040** | sec. sash gear 16 AF sz 80 1SB | | | 801 - 1200 | 305 - 505 | 400 - 600 |
| **TGMS4050** | sec. sash gear 16 AF sz 120 1SB | | | 1201 - 1600 | 305 - 505 | 600 - 800 |
| TGMS4120 | sec. sash gear 16 AF sz 120 2SB 70 | | | 1201 - 1600 | 510 - 710 | 600 - 800 |
| **TGMS4130** | sec. sash gear 16 AF sz 160 2SB 70 | | | 1601 - 2000 | 650 - 880 | 800 - 1000 |
| **TGMS4080** | sec. sash gear 16 AF sz 200 2SB | | | 2001 - 2400 | 850 - 1050 | 1000 - 1200 |
| **TGMS4080** | sec. sash gear 16 AF sz 200 2SB | **TZKS1020** | linkage AF sz 1 1SB-RS | 2401 - 2800 | 1050 - 1250 | 1200 - 1400 |
| | | **TZKS1060** | linkage AF sz 1 1SB-VSU | | | |
| **TGMK4080** | sec. sash gear 16 AF sz 200 2SB | **TZKS1030** | linkage AF sz 2 1SB-RS | 2801 - 3000 | 1250 - 1450 | 1400 - 1500 |
| | | **TZKS1070** | linkage AF sz 2 1SB-VSU | | | |

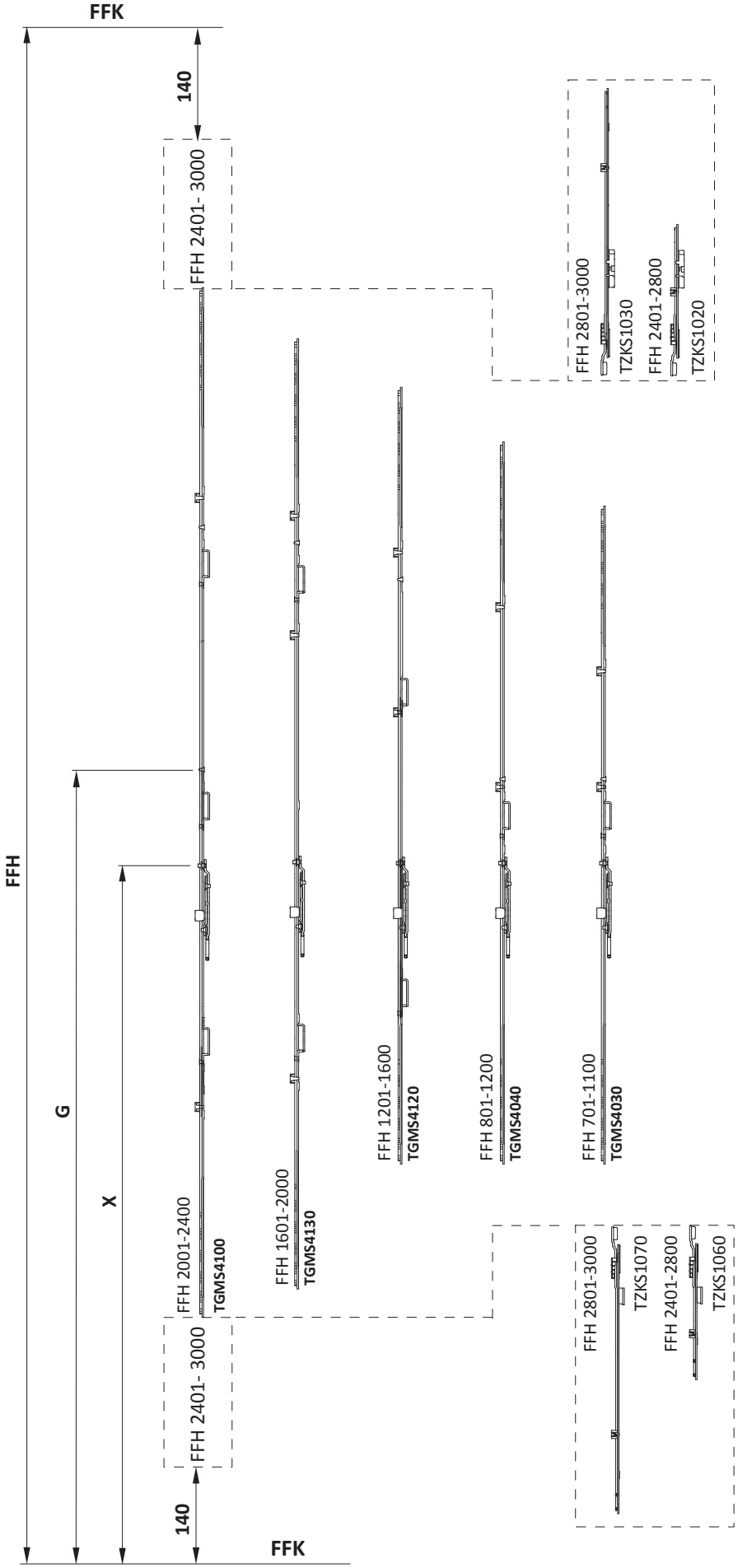
FFK
140
FFH 2401- 3000
FFH 2801-3000
TZKS1030
FFH 2401-2800
TZKS1020
FFH
G
X
FFH 1201-1600
TGMS4120
FFH 801-1200
TGMS4040
FFH 701-1100
TGMS4030
FFH 1601-2000
TGMS4130
FFH 2001-2400
TGMS4100
FFH 2401- 3000
FFH 2801-3000
TZKS1070
FFH 2401-2800
TZKS1060
140
FFK

| Material number | Description | Material number | Description | FFH (mm) | x (mm) | G (mm) In the main sash |
|---|---|---|---|---|---|---|
| **TGMS4030** | sec. sash gear 16 AF sz 70 1SB | | | 701 - 1100 | 300 - 500 | 350 - 550 |
| **TGMS4040** | sec. sash gear 16 AF sz 80 1SB | | | 801 - 1200 | 305 - 505 | 400 - 600 |
| **TGMS4120** | sec. sash gear 16 AF sz 120 2SB 70 | | | 1201 - 1600 | 510 - 710 | 600 - 800 |
| **TGMS4130** | sec. sash gear 16 AF sz 160 2SB 70 | | | 1601 - 2000 | 650 - 880 | 800 - 1000 |
| **TGMS4100** | sec. sash gear 16 AF sz 200 3SB 70 | | | 2001 - 2400 | 850 - 1050 | 1000 - 1200 |
| **TGMS4100** | sec. sash gear 16 AF sz 200 3SB 70 | **TZKS1020** | linkage AF sz 1 1SB-RS | 2401 - 2800 | 1050 - 1250 | 1200 - 1400 |
| | | **TZKS1060** | linkage AF sz 1 1SB-VSU | | | |
| **TGMK4100** | sec. sash gear 16 AF sz 200 3SB 70 | **TZKS1030** | linkage AF sz 2 1SB-RS | 2801 - 3000 | 1250 - 1450 | 1400 - 1500 |
| | | **TZKS1070** | linkage AF sz 2 1SB-VSU | | | |

## Technical information

| Part number | Description | FFH | Dimensions (mm) | | | | |
|---|---|---|---|---|---|---|---|
| | | | G2 | A | X | | |
| TGMS4030-... | sec.sash gear 16 AF sz 70 1SB | 701 - 1100 | 350 - 550 | 820 | 359 | 0 | 3 |
| TGMS4040-... | sec.sash gear 16 AF sz 80 1SB | 801 - 1200 | 400 - 600 | 920 | 365 | 0 | 3 |
| TGMS4050-... | sec.sash gear 16 AF sz 120 1SB | 1201 - 1600 | 600 - 800 | 1320 | 365 | 0 | 5 |
| TGMS4120-... | sec.sash gear 16 AF 120 2SB 70 | 1201 - 1600 | 600 - 800 | 1320 | 570 | 0 | 7 |
| TGMS4130-... | sec.sash gear 16 AF 160 2SB 70 | 1601 - 2000 | 800 - 1000 | 1720 | 710 | 0 | 8 |
| TGMS4080-... | sec.sash gear 16 AF sz 200 2SB | 2001 - 3000 | 1000 - 1500 | 2120 | 910 | 0 | 9 |

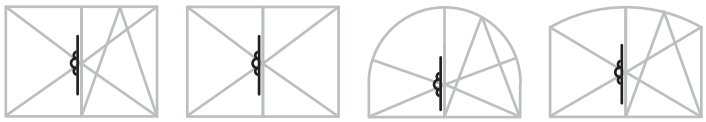

- Handle height centre/variable
- G2 in the main sash
- Use in slave sashes with opposing fitting groove
- Striker plate with locking slider
- Suitable for snapper and switchable snapper FFH 1600-3000 mm

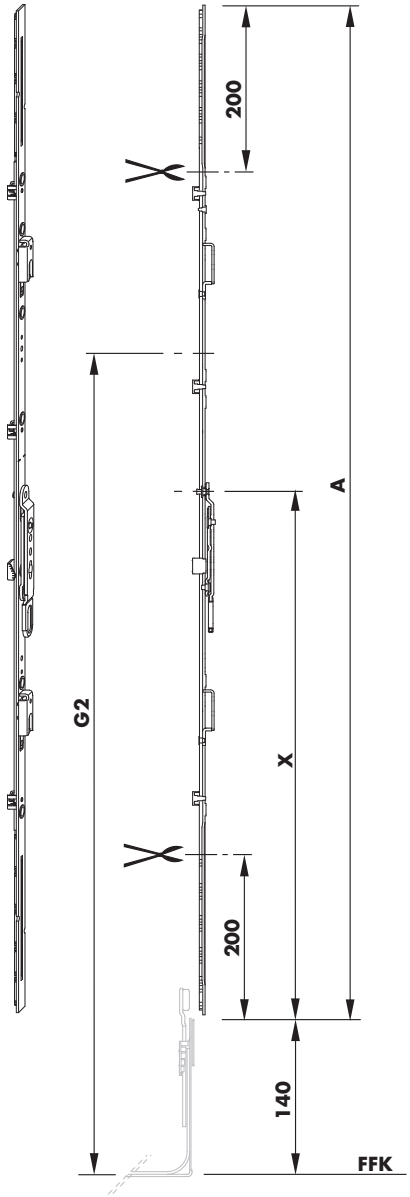

## Sales information

| Description | Part number | Surface | Colour | Box quantity |
|---|---|---|---|---|
| sec.sash gear 16 AF sz 70 1SB | TGMS4030-10001_ | Titan Silver | without | 1 pc |
| | TGMS4030-10004_ | Titan Silver | without | 25 pcs |
| sec.sash gear 16 AF sz 80 1SB | TGMS4040-10001_ | Titan Silver | without | 1 pc |
| | TGMS4040-10004_ | Titan Silver | without | 25 pcs |
| sec.sash gear 16 AF sz 120 1SB | TGMS4050-10001_ | Titan Silver | without | 1 pc |
| | TGMS4050-10004_ | Titan Silver | without | 25 pcs |
| sec.sash gear 16 AF 120 2SB 70 | TGMS4120-10001_ | Titan Silver | without | 1 pc |
| | TGMS4120-10004_ | Titan Silver | without | 25 pcs |
| sec.sash gear 16 AF 160 2SB 70 | TGMS4130-10001_ | Titan Silver | without | 1 pc |
| | TGMS4130-10002_ | Titan Silver | without | 10 pcs |
| sec.sash gear 16 AF sz 200 2SB | TGMS4080-10001_ | Titan Silver | without | 1 pc |
| | TGMS4080-10002_ | Titan Silver | without | 10 pcs |

## Technical information

| Part number | Description | FFH | Dimensions (mm) | | | | |
|---|---|---|---|---|---|---|---|
| | | | G2 | A | X | | |
| TGMS4030-... | sec.sash gear 16 AF sz 70 1SB | 701 - 1100 | 350 - 550 | 820 | 359 | 0 | 3 |
| TGMS4040-... | sec.sash gear 16 AF sz 80 1SB | 801 - 1200 | 400 - 600 | 920 | 365 | 0 | 3 |
| TGMS4120-... | sec.sash gear 16 AF 120 2SB 70 | 1201 - 1600 | 600 - 800 | 1320 | 570 | 0 | 7 |
| TGMS4130-... | sec.sash gear 16 AF 160 2SB 70 | 1601 - 2000 | 800 - 1000 | 1720 | 710 | 0 | 8 |
| TGMS4100-... | sec.sash gear 16 AF 200 3SB 70 | 2001 - 3000 | 1000 - 1500 | 2120 | 910 | 0 | 11 |

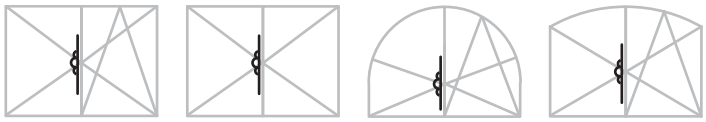

- Handle height centre/variable
- Locking distance 700 mm
- G2 in the main sash
- Use in slave sashes with opposing fitting groove
- Striker plate with locking slider
- Suitable for snapper and switchable snapper FFH 1600-3000 mm

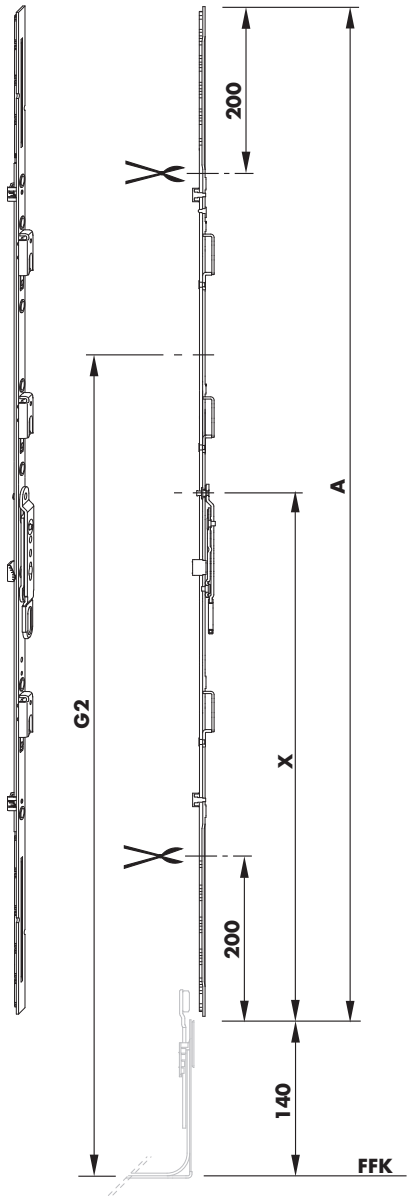

## Sales information

| Description | Part number | Surface | Colour | Box quantity |
|---|---|---|---|---|
| sec.sash gear 16 AF sz 70 1SB | TGMS4030-10001_ | Titan Silver | without | 1 pc |
| | TGMS4030-10004_ | Titan Silver | without | 25 pcs |
| sec.sash gear 16 AF sz 80 1SB | TGMS4040-10001_ | Titan Silver | without | 1 pc |
| | TGMS4040-10004_ | Titan Silver | without | 25 pcs |
| sec.sash gear 16 AF 120 2SB 70 | TGMS4120-10001_ | Titan Silver | without | 1 pc |
| | TGMS4120-10004_ | Titan Silver | without | 25 pcs |
| sec.sash gear 16 AF 160 2SB 70 | TGMS4130-10001_ | Titan Silver | without | 1 pc |
| | TGMS4130-10002_ | Titan Silver | without | 10 pcs |
| sec.sash gear 16 AF 200 3SB 70 | TGMS4100-10001_ | Titan Silver | without | 1 pc |
| | TGMS4100-10002_ | Titan Silver | without | 10 pcs |

| Description | Material | Page |
|---|---|---|
| Application matrix:<br>sec. sash gear 8 AF, handle height constant | | 3.4 - 2 |
| Application matrix:<br>sec. sash gear 8 AF, handle height constant, locking distance 700 mm | | 3.4 - 4 |
| sec. sash gear 8 GK | TGKS1030, TGKS1040, TGKS1050, TGKS1060, TGKS1120, TGKS1070, TGKS1130, TGKS1160, TGKS1150, TGKS1170, TGKS1110 | 3.4 - 6 |
| sec. sash gear 8 GK 700 | TGKS1030, TGKS1040, TGKS1050, TGKS1060, TGKS1070, TGKS1160, TGKS1150, TGKS1170, TGKS1180 | 3.4 - 8 |
| Application matrix:<br>sec. sash gear 8 AF, handle height centre/variable | | 3.4 - 10 |
| Application matrix:<br>sec. sash gear 8 AF, handle height centre/variable, locking distance 700 mm | | 3.4 - 12 |
| sec. sash gear 8 GM | TGMS1000, TGMS1010, TGMS1050, TGMS1060, TGMS1040 | 3.4 - 14 |
| sec. sash gear 8 GM 700 | TGMS1000, TGMS1010, TGMS1050, TGMS1060, TGMS1070 | 3.4 - 16 |

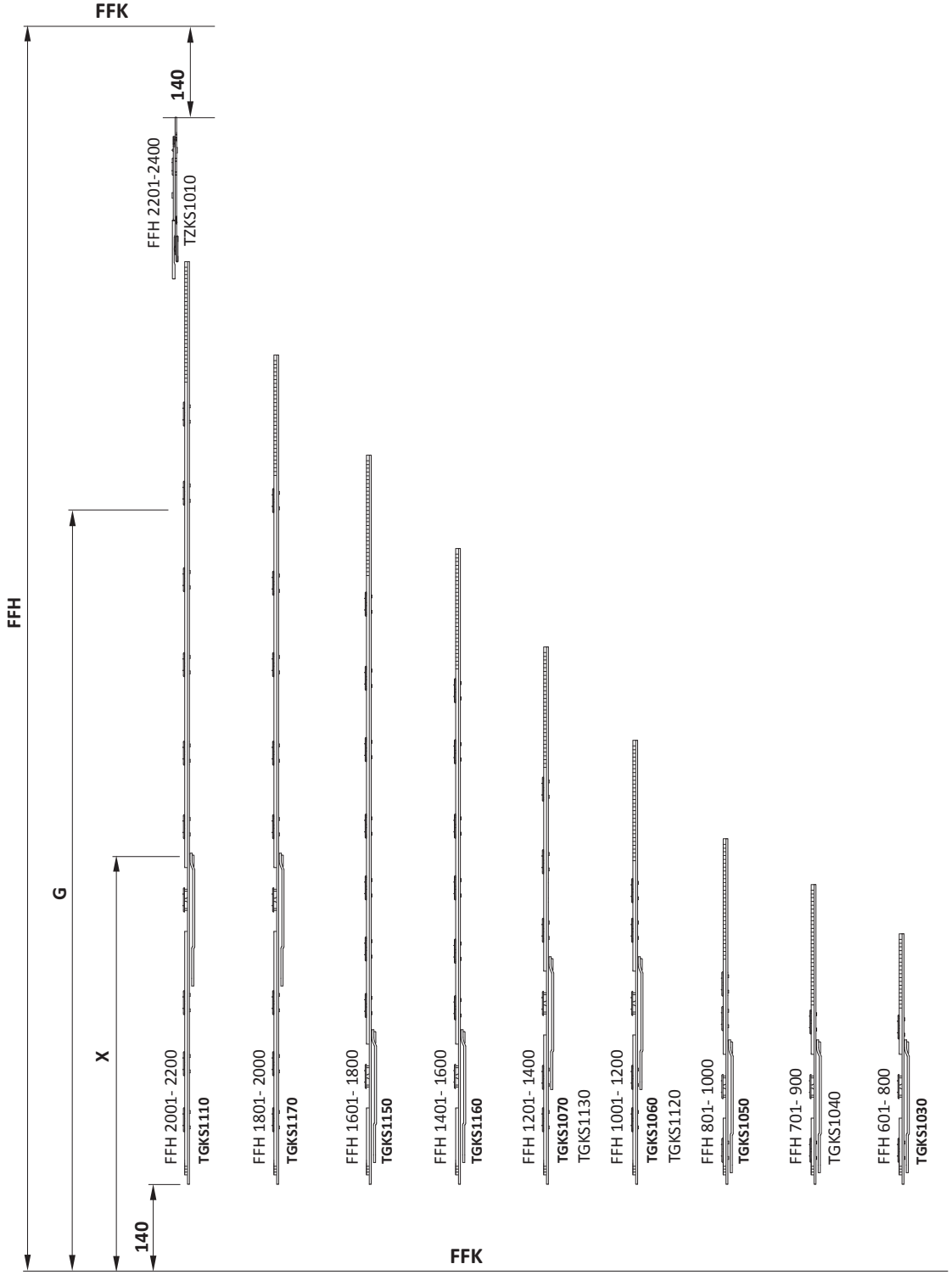
FFK
140
FFH 2201-2400
TZKS1010
FFH
G
X
FFH 2001- 2200
TGKS1110
FFH 1801- 2000
TGKS1170
FFH 1601- 1800
TGKS1150
FFH 1401- 1600
TGKS1160
FFH 1201- 1400
TGKS1070
TGKS1130
FFH 1001- 1200
TGKS1060
TGKS1120
FFH 801- 1000
TGKS1050
FFH 701- 900
TGKS1040
FFH 601- 800
TGKS1030
140
FFK

| Material number | Description | Material number | Description | FFH (mm) | X (mm) | G (mm) In the main sash |
|---|---|---|---|---|---|---|
| **TGKS1030** | sec. sash gear 8 sz 60/G300 | | | 601 - 800 | 285,5 | 300 |
| TGKS1040 | sec. sash gear 8 sz 70/G300 | | | 701 - 900 | 285,5 | 300 |
| **TGKS1050** | sec. sash gear 8 sz 80/G400 | | | 801 - 1000 | 285,5 | 400 |
| **TGKS1060** | sec. sash gear 8 sz 100/G500 | | | 1001 - 1200 | 430 | 500 |
| TGKS1120 | sec. sash gear 8 sz 100/G400 | | | 1001 - 1200 | 600 | 400 |
| **TGKS1070** | sec. sash gear 8 sz 120/G600 | | | 1201 - 1400 | 430 | 600 |
| TGKS1130 | sec. sash gear 8 sz 120/G400 | | | 1201 - 1400 | 285,5 | 400 |
| **TGKS1160** | sec. sash gear 8 sz 140/G700 2SB 70 | | | 1401 - 1600 | 285,5 | 700 |
| **TGKS1150** | sec. sash gear 8 sz 160/G700 2SB 70 | | | 1601 - 1800 | 285,5 | 700 |
| **TGKS1170** | sec. sash gear 8 sz 180/G1000 2SB 70 | | | 1801 - 2000 | 910 | 1000 |
| **TGKS1110** | sec. sash gear 8 sz 200/G1000 2SB | | | 2001 - 2200 | 700 | 1000 |
| **TGKS1110** | sec. sash gear 8 sz 200/G1000 2SB | **TZKS1010** | linkage KS Stulp 8 sz 1 | 2201 - 2400 | 700 | 1000 |

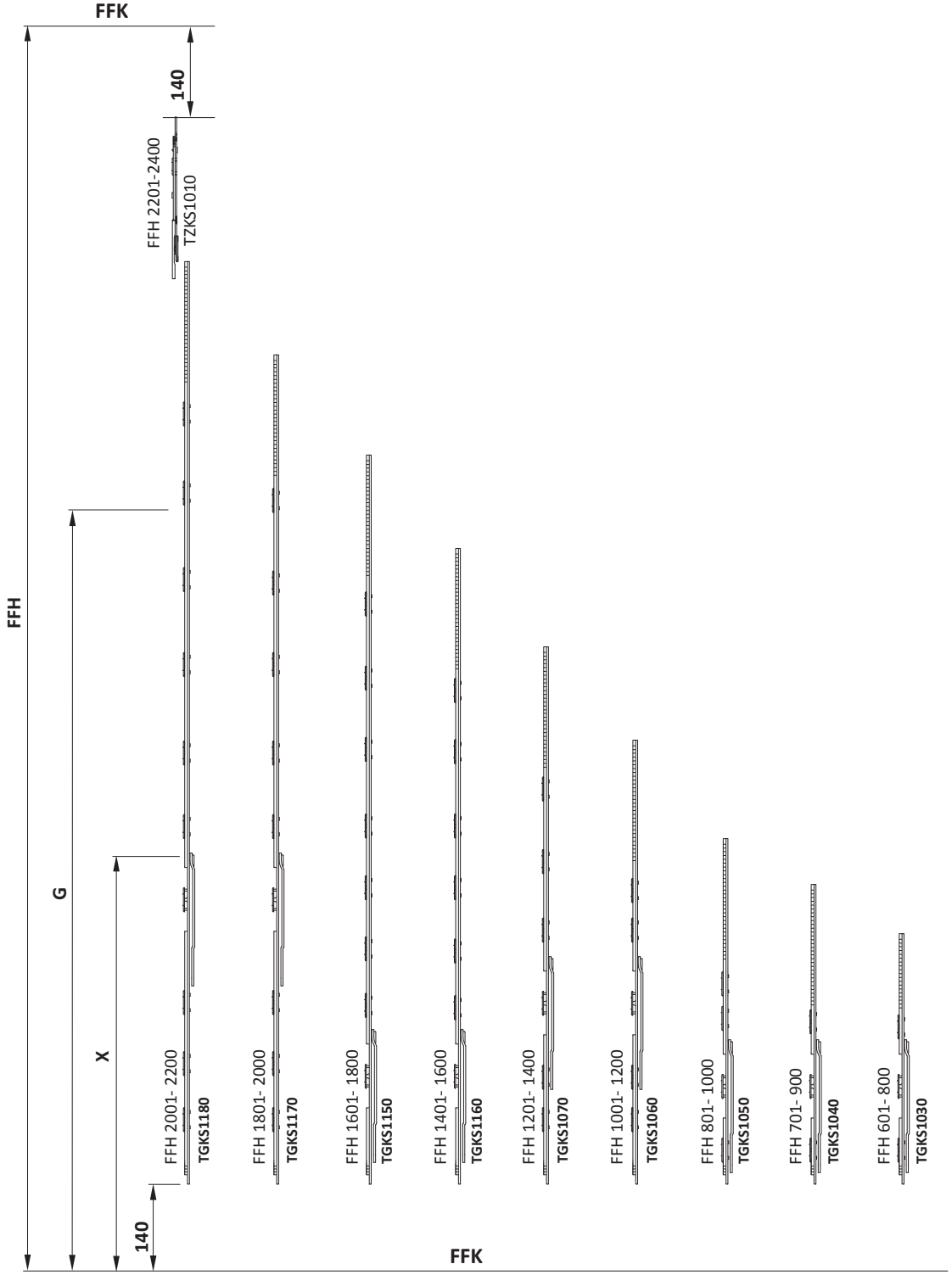
FFK
140
FFH 2201-2400
TZKS1010
FFH
G
X
FFH 2001- 2200
TGKS1180
FFH 1801- 2000
TGKS1170
FFH 1601- 1800
TGKS1150
FFH 1401- 1600
TGKS1160
FFH 1201- 1400
TGKS1070
FFH 1001- 1200
TGKS1060
FFH 801- 1000
TGKS1050
FFH 701- 900
TGKS1040
FFH 601- 800
TGKS1030
140
FFK

# Application matrix for sec. sash gear 8 AF

Handle height constant
Locking distance 700 mm

| Material number | Description | Material number | Description | FFH (mm) | X (mm) | G (mm) In the main sash |
|---|---|---|---|---|---|---|
| **TGKS1030** | sec. sash gear 8 sz 60/G300 | | | 601 - 800 | 285,5 | 300 |
| **TGKS1040** | sec. sash gear 8 sz 70/G300 | | | 701 - 900 | 285,5 | 300 |
| **TGKS1050** | sec. sash gear 8 sz 80/G400 | | | 801 - 1000 | 285,5 | 400 |
| **TGKS1060** | sec. sash gear 8 sz 100/G500 | | | 1001 - 1200 | 430 | 500 |
| **TGKS1070** | sec. sash gear 8 sz 120/G600 | | | 1201 - 1400 | 430 | 600 |
| **TGKS1160** | sec. sash gear 8 sz 140/G700 2SB 70 | | | 1401 - 1600 | 285,5 | 700 |
| **TGKS1150** | sec. sash gear 8 sz 160/G700 2SB 70 | | | 1601 - 1800 | 285,5 | 700 |
| **TGKS1170** | sec. sash gear 8 sz 180/G1000 2SB 70 | | | 1801 - 2000 | 910 | 1000 |
| **TGKS1180** | sec. sash gear 8 sz 200/G1000 3SB 70 | | | 2001 - 2200 | 910 | 1000 |
| **TGKS1180** | sec. sash gear 8 sz 200/G1000 3SB 70 | **TZKS1010** | linkage KS Stulp 8 sz 1 | 2201 - 2400 | 910 | 1000 |

## Technical information

| Part number | Description | FFH | Dimensions (mm) | | | |
|---|---|---|---|---|---|---|
| | | | G1 | A | X | |
| TGKS1030-... | sec.sash gear 8 sz 60/G300 | 601 - 800 | 300 | 520 | 145,50 | 3 |
| TGKS1040-... | sec.sash gear 8 sz 70/G300 | 701 - 900 | 300 | 620 | 145,50 | 3 |
| TGKS1050-... | sec.sash gear 8 sz 80/G400 | 801 - 1000 | 400 | 720 | 145,50 | 3 |
| TGKS1060-... | sec.sash gear 8 sz 100/G500 | 1001 - 1200 | 500 | 920 | 290 | 6 |
| TGKS1120-... | sec.sash gear 8 sz 100/G400 | 1001 - 1200 | 400 | 920 | 460 | 6 |
| TGKS1070-... | sec.sash gear 8 sz 120/G600 | 1201 - 1400 | 600 | 1120 | 290 | 7 |
| TGKS1130-... | sec.sash gear 8 sz 120/G400 | 1201 - 1400 | 400 | 1120 | 145,50 | 5 |
| TGKS1160-... | sec.sash gear 8 sz 140/G700 70 | 1401 - 1600 | 700 | 1320 | 145,50 | 8 |
| TGKS1150-... | sec.sash gear 8 160/G700 2SB70 70 | 1601 - 1800 | 700 | 1520 | 145,50 | 7 |
| TGKS1170-... | sec.sash gear 8 sz 180/G1000 2 70 | 1801 - 2000 | 1000 | 1720 | 770 | 9 |
| TGKS1110-... | sec.sash gear 8 sz 200/G1000 | 2001 - 2400 | 1000 | 1920 | 560 | 11 |

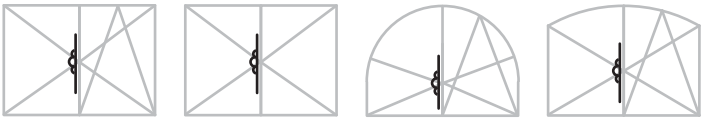

- Cannot be combined with SIEGENIA gear backset 7 mm!
- Handle height constant
- Can be used in the secondary sash with groove ../8x4
- G1 in the main sash
- FRSA05 profile related, refer to PDB
- Reverse-action

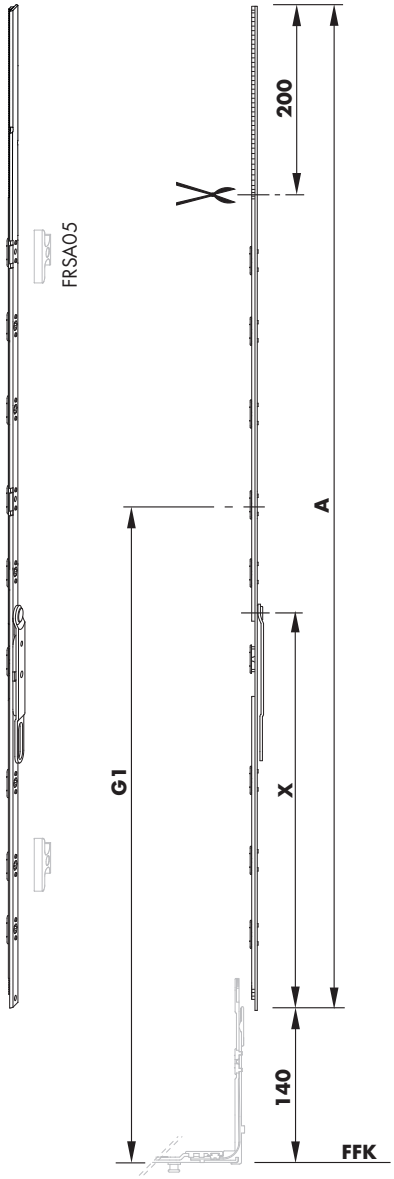

## Sales information

| Description | Part number | Surface | Colour | Box quantity |
|---|---|---|---|---|
| sec.sash gear 8 sz 60/G300 | TGKS1030-10001_ | Titan Silver | without | 1 pc |
| | TGKS1030-10004_ | Titan Silver | without | 25 pcs |
| sec.sash gear 8 sz 70/G300 | TGKS1040-10001_ | Titan Silver | without | 1 pc |
| | TGKS1040-10004_ | Titan Silver | without | 25 pcs |
| sec.sash gear 8 sz 80/G400 | TGKS1050-10001_ | Titan Silver | without | 1 pc |
| | TGKS1050-10004_ | Titan Silver | without | 25 pcs |
| sec.sash gear 8 sz 100/G500 | TGKS1060-10001_ | Titan Silver | without | 1 pc |
| | TGKS1060-10004_ | Titan Silver | without | 25 pcs |
| sec.sash gear 8 sz 100/G400 | TGKS1120-10001_ | Titan Silver | without | 1 pc |
| | TGKS1120-10004_ | Titan Silver | without | 25 pcs |
| sec.sash gear 8 sz 120/G600 | TGKS1070-10001_ | Titan Silver | without | 1 pc |
| | TGKS1070-10004_ | Titan Silver | without | 25 pcs |
| sec.sash gear 8 sz 120/G400 | TGKS1130-10001_ | Titan Silver | without | 1 pc |
| | TGKS1130-10004_ | Titan Silver | without | 25 pcs |
| sec.sash gear 8 sz 140/G700 70 | TGKS1160-10001_ | Titan Silver | without | 1 pc |
| | TGKS1160-10004_ | Titan Silver | without | 25 pcs |
| sec.sash gear 8 160/G700 2SB70 70 | TGKS1150-10001_ | Titan Silver | without | 1 pc |
| | TGKS1150-10002_ | Titan Silver | without | 10 pcs |
| sec.sash gear 8 sz 180/G1000 2 70 | TGKS1170-10001_ | Titan Silver | without | 1 pc |
| | TGKS1170-10002_ | Titan Silver | without | 10 pcs |
| sec.sash gear 8 sz 200/G1000 | TGKS1110-10001_ | Titan Silver | without | 1 pc |
| | TGKS1110-10002_ | Titan Silver | without | 10 pcs |

## Technical information

| Part number | Description | FFH | Dimensions (mm) | | | |
|---|---|---|---|---|---|---|
| | | | G1 | A | X | |
| TGKS1030-... | sec.sash gear 8 sz 60/G300 | 601 - 800 | 300 | 520 | 145,50 | 3 |
| TGKS1040-... | sec.sash gear 8 sz 70/G300 | 701 - 900 | 300 | 620 | 145,50 | 3 |
| TGKS1050-... | sec.sash gear 8 sz 80/G400 | 801 - 1000 | 400 | 720 | 145,50 | 3 |
| TGKS1060-... | sec.sash gear 8 sz 100/G500 | 1001 - 1200 | 500 | 920 | 290 | 6 |
| TGKS1070-... | sec.sash gear 8 sz 120/G600 | 1201 - 1400 | 600 | 1120 | 290 | 7 |
| TGKS1160-... | sec.sash gear 8 sz 140/G700 70 | 1401 - 1600 | 700 | 1320 | 145,50 | 8 |
| TGKS1150-... | sec.sash gear 8 160/G700 2SB70 70 | 1601 - 1800 | 700 | 1520 | 145,50 | 7 |
| TGKS1170-... | sec.sash gear 8 sz 180/G1000 2 70 | 1801 - 2000 | 1000 | 1720 | 770 | 9 |
| TGKS1180-... | sec.sash gear 8 sz 200/G1000 3 70 | 2001 - 2200 | 1000 | 1920 | 770 | 10 |

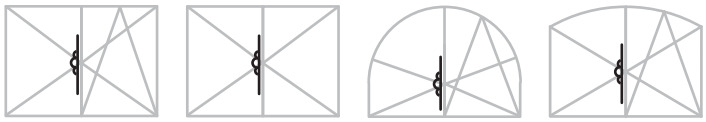

- Cannot be combined with SIEGENIA gear backset 7 mm!
- Handle height constant
- Can be used in the secondary sash with groove ../8x4
- G1 in the main sash
- FRSA05 profile related, refer to PDB
- Locking distance 700 mm
- Reverse-action

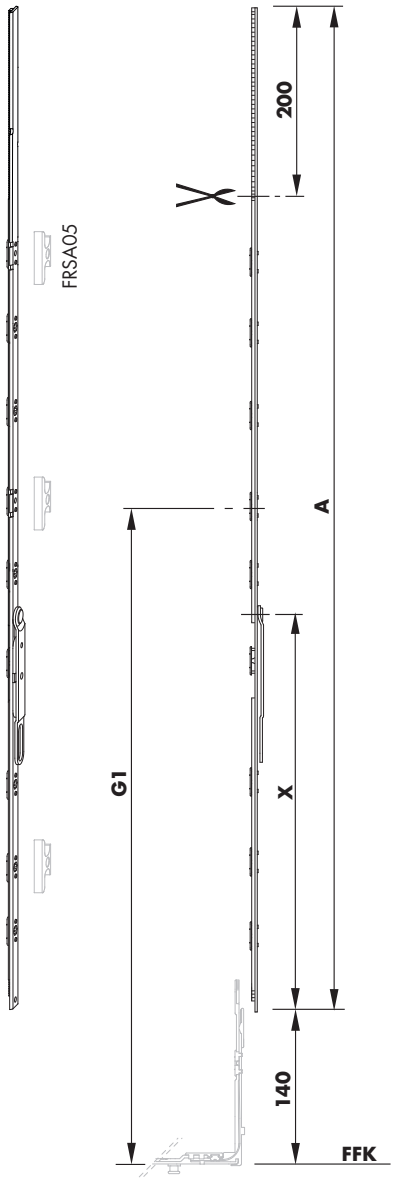

## Sales information

| Description | Part number | Surface | Colour | Box quantity |
|---|---|---|---|---|
| sec.sash gear 8 sz 60/G300 | TGKS1030-10001_ | Titan Silver | without | 1 pc |
| | TGKS1030-10004_ | Titan Silver | without | 25 pcs |
| sec.sash gear 8 sz 70/G300 | TGKS1040-10001_ | Titan Silver | without | 1 pc |
| | TGKS1040-10004_ | Titan Silver | without | 25 pcs |
| sec.sash gear 8 sz 80/G400 | TGKS1050-10001_ | Titan Silver | without | 1 pc |
| | TGKS1050-10004_ | Titan Silver | without | 25 pcs |
| sec.sash gear 8 sz 100/G500 | TGKS1060-10001_ | Titan Silver | without | 1 pc |
| | TGKS1060-10004_ | Titan Silver | without | 25 pcs |
| sec.sash gear 8 sz 120/G600 | TGKS1070-10001_ | Titan Silver | without | 1 pc |
| | TGKS1070-10004_ | Titan Silver | without | 25 pcs |
| sec.sash gear 8 sz 140/G700 70 | TGKS1160-10001_ | Titan Silver | without | 1 pc |
| | TGKS1160-10004_ | Titan Silver | without | 25 pcs |
| sec.sash gear 8 160/G700 2SB70 70 | TGKS1150-10001_ | Titan Silver | without | 1 pc |
| | TGKS1150-10002_ | Titan Silver | without | 10 pcs |
| sec.sash gear 8 sz 180/G1000 2 70 | TGKS1170-10001_ | Titan Silver | without | 1 pc |
| | TGKS1170-10002_ | Titan Silver | without | 10 pcs |
| sec.sash gear 8 sz 200/G1000 3 70 | TGKS1180-10001_ | Titan Silver | without | 1 pc |
| | TGKS1180-10002_ | Titan Silver | without | 10 pcs |

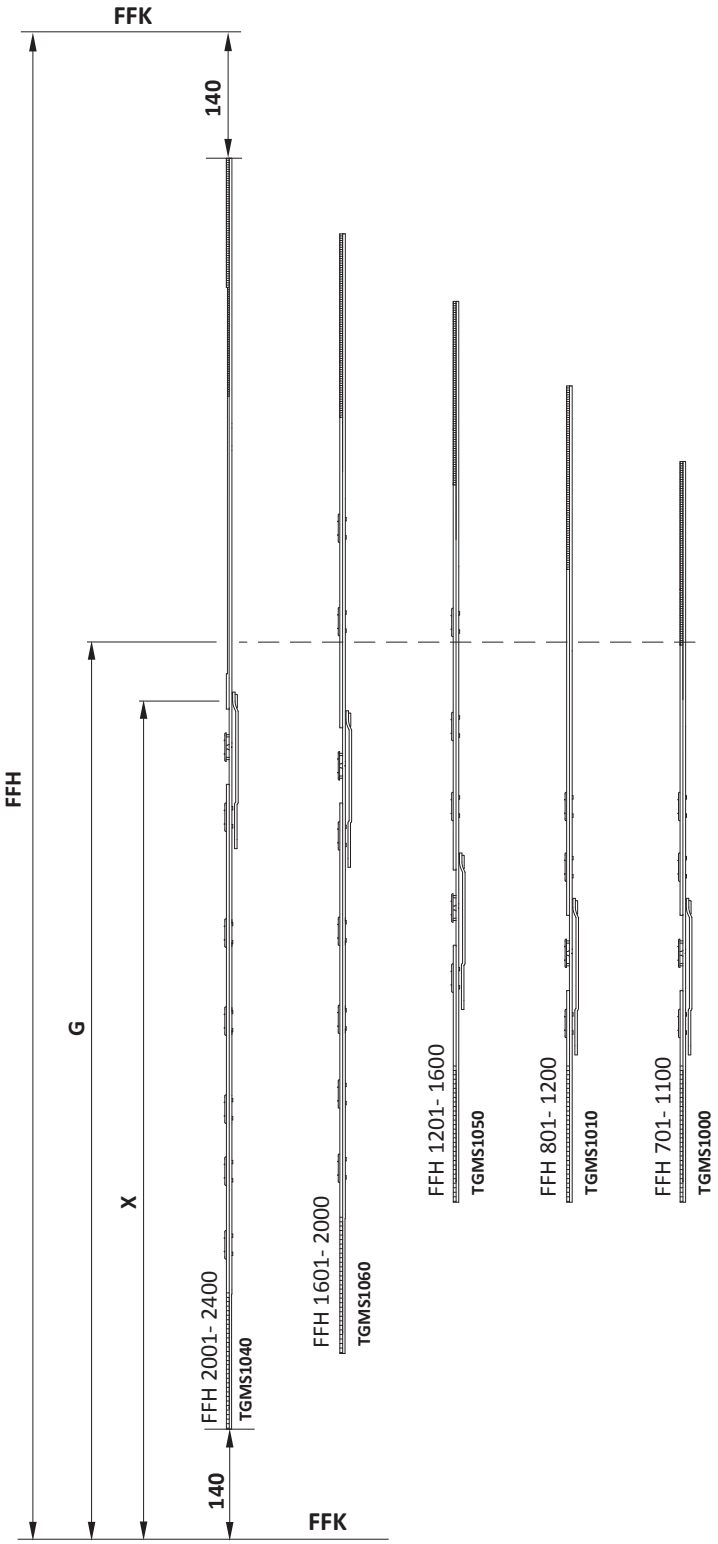
FFK
140
FFH
G
X
FFH 2001- 2400
TGMS1040
FFH 1601- 2000
TGMS1060
FFH 1201- 1600
TGMS1050
FFH 801- 1200
TGMS1010
FFH 701- 1100
TGMS1000
140
FFK

| Material number | Description | FFH (mm) | x (mm) | G (mm) In the main sash |
|---|---|---|---|---|
| **TGMS1000** | sec. sash gear 8 sz 70 | 701 - 1100 | 305 - 505 | 350 - 550 |
| **TGMS1010** | sec. sash gear 8 sz 80 | 801 - 1200 | 355 - 505 | 400 - 600 |
| **TGMS1050** | sec. sash gear 8 sz 120 2SB 70 | 1201 - 1600 | 515 - 715 | 600 - 800 |
| **TGMS1060** | sec. sash gear 8 sz 160 2SB 70 | 1601 - 2000 | 650 - 850 | 800 - 1000 |
| **TGMS1040** | sec. sash gear 8 sz 200 | 2001 - 2400 | 850 - 1050 | 1000 - 1200 |

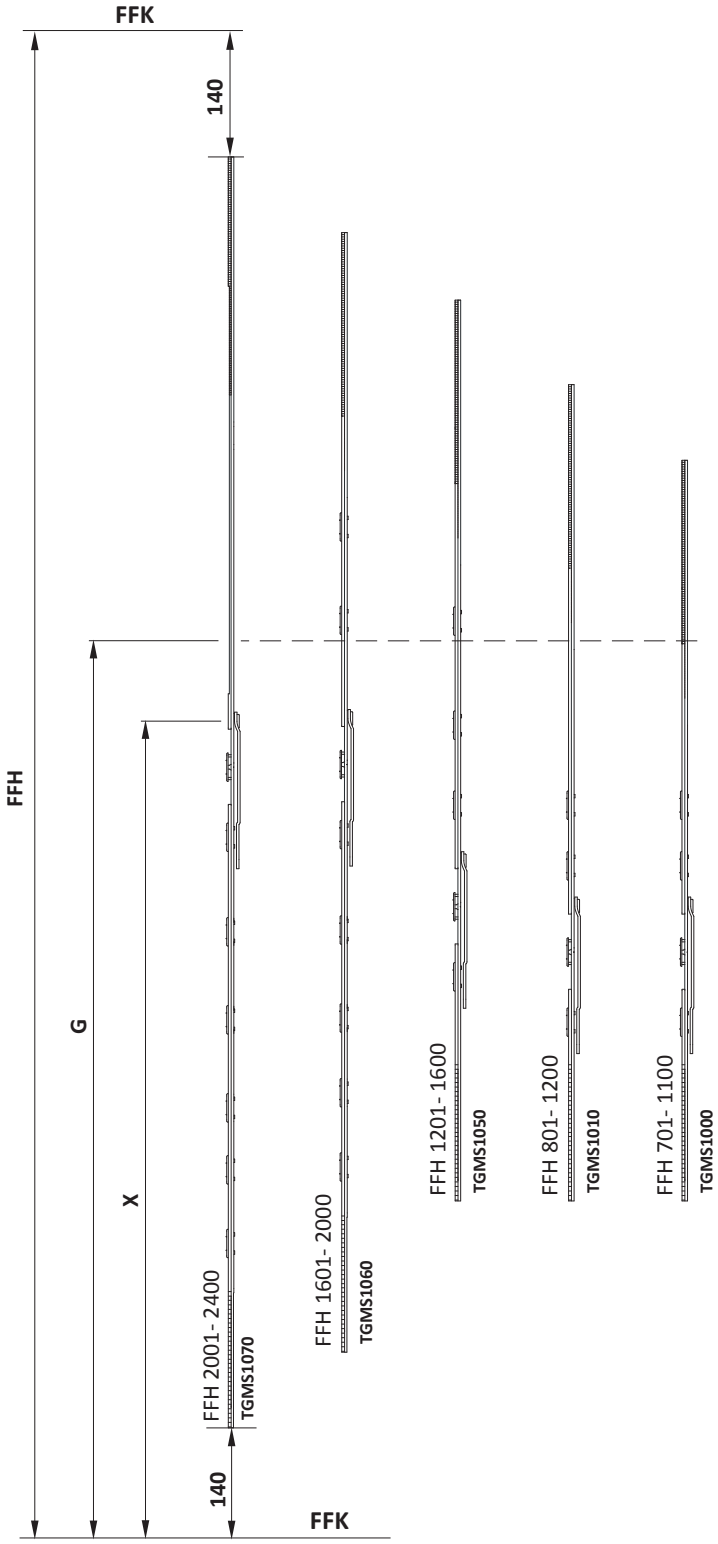
FFK
140
FFH
G
X
FFH 2001- 2400
TGMS1070
FFH 1601- 2000
TGMS1060
FFH 1201- 1600
TGMS1050
FFH 801- 1200
TGMS1010
FFH 701- 1100
TGMS1000
140
FFK

# Application matrix for sec. sash gear 8 AF

Handle height variable/centre
Locking distance 700 mm

| Material number | Description | FFH (mm) | x (mm) | G (mm) In the main sash |
|---|---|---|---|---|
| **TGMS1000** | sec. sash gear 8 sz 70 | 701 - 1100 | 305 - 505 | 350 - 550 |
| **TGMS1010** | sec. sash gear 8 sz 80 | 801 - 1200 | 355 - 505 | 400 - 600 |
| **TGMS1050** | sec. sash gear 8 sz 120 2SB 70 | 1201 - 1600 | 515 - 715 | 600 - 800 |
| **TGMS1060** | sec. sash gear 8 sz 160 2SB 70 | 1601 - 2000 | 650 - 850 | 800 - 1000 |
| **TGMS1070** | sec. sash gear 8 sz 200 3SB 70 | 2001 - 2400 | 850 - 1050 | 1000 - 1200 |

## Technical information

| Part number | Description | FFH | Dimensions (mm) | | | |
|---|---|---|---|---|---|---|
| | | | G2 | A | X | |
| TGMS1000-... | sec.sash gear 8 sz 70 | 701 - 1100 | 300 - 500 | 820 | 365 | 3 |
| TGMS1010-... | sec.sash gear 8 sz 80 | 801 - 1200 | 400 - 600 | 920 | 365 | 4 |
| TGMS1050-... | sec.sash gear 8 sz 120 2SB 70 | 1201 - 1600 | 600 - 800 | 1320 | 575 | 7 |
| TGMS1060-... | sec.sash gear 8 sz 160 2SB 70 | 1601 - 2000 | 800 - 1000 | 1720 | 710 | 7 |
| TGMS1040-... | sec.sash gear 8 sz 200 | 2001 - 2400 | 1000 - 1200 | 2120 | 910 | 9 |

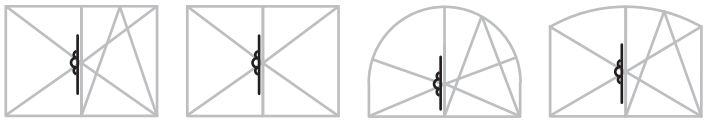

- Cannot be combined with SIEGENIA gear backset 7 mm!
- Handle height centre/variable
- Can be used in the secondary sash with groove ../8x4
- G2 in the main sash
- FRSA05 profile related, refer to PDB
- Reverse-action

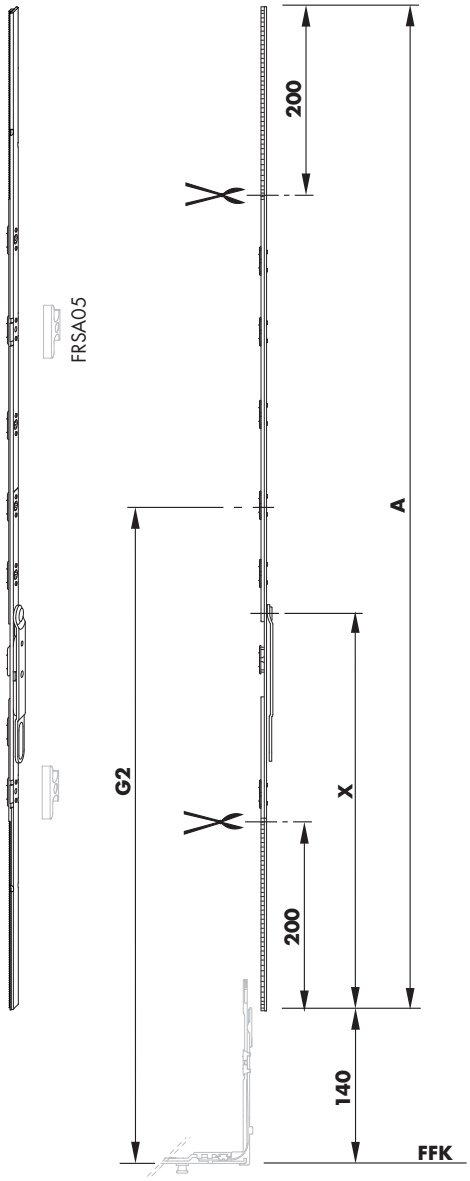

## Sales information

| Description | Part number | Surface | Colour | Box quantity |
|---|---|---|---|---|
| sec.sash gear 8 sz 70 | TGMS1000-10001_ | Titan Silver | without | 1 pc |
| | TGMS1000-10004_ | Titan Silver | without | 25 pcs |
| sec.sash gear 8 sz 80 | TGMS1010-10001_ | Titan Silver | without | 1 pc |
| | TGMS1010-10004_ | Titan Silver | without | 25 pcs |
| sec.sash gear 8 sz 120 2SB 70 | TGMS1050-10001_ | Titan Silver | without | 1 pc |
| | TGMS1050-10004_ | Titan Silver | without | 25 pcs |
| sec.sash gear 8 sz 160 2SB 70 | TGMS1060-10001_ | Titan Silver | without | 1 pc |
| | TGMS1060-10002_ | Titan Silver | without | 10 pcs |
| sec.sash gear 8 sz 200 | TGMS1040-10001_ | Titan Silver | without | 1 pc |
| | TGMS1040-10002_ | Titan Silver | without | 10 pcs |

## Technical information

| Part number | Description | FFH | Dimensions (mm) | | | |
|---|---|---|---|---|---|---|
| | | | G2 | A | X | |
| TGMS1000-... | sec.sash gear 8 sz 70 | 701 - 1100 | 300 - 500 | 820 | 365 | 3 |
| TGMS1010-... | sec.sash gear 8 sz 80 | 801 - 1200 | 400 - 600 | 920 | 365 | 4 |
| TGMS1050-... | sec.sash gear 8 sz 120 2SB 70 | 1201 - 1600 | 600 - 800 | 1320 | 575 | 7 |
| TGMS1060-... | sec.sash gear 8 sz 160 2SB 70 | 1601 - 2000 | 800 - 1000 | 1720 | 710 | 7 |
| TGMS1070-... | sec.sash gear 8 sz 200 3SB 70 | 2001 - 2400 | 1000 - 1200 | 2120 | 910 | 8 |

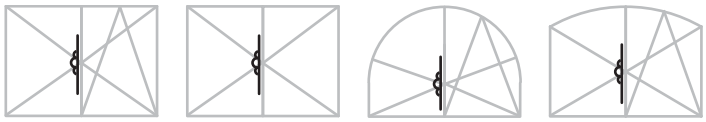

- Cannot be combined with SIEGENIA gear backset 7 mm!
- Handle height centre/variable
- Can be used in the secondary sash with groove ../8x4
- G2 in the main sash
- FRSA05 profile related, refer to PDB
- Locking distance 700 mm
- Reverse-action

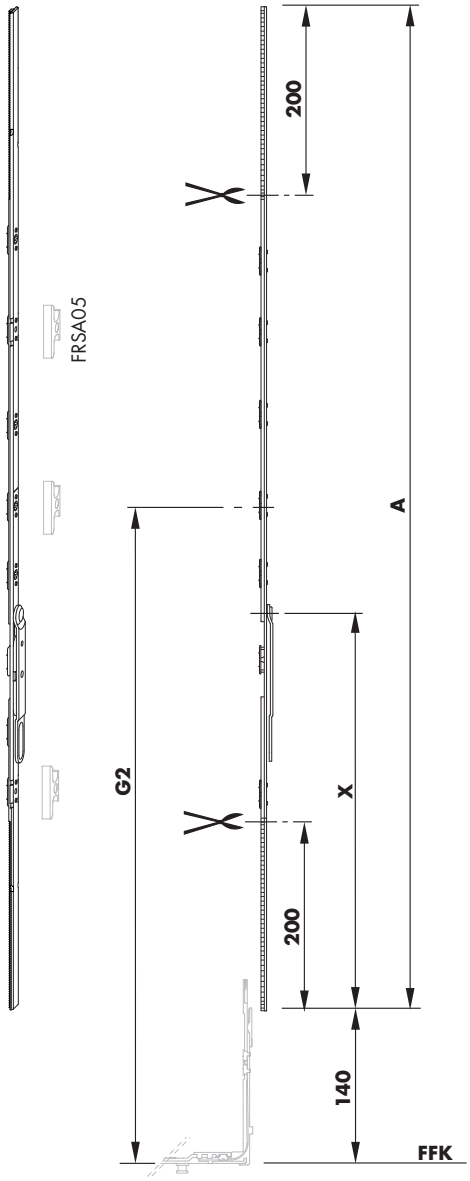

## Sales information

| Description | Part number | Surface | Colour | Box quantity |
|---|---|---|---|---|
| sec.sash gear 8 sz 70 | TGMS1000-10001_ | Titan Silver | without | 1 pc |
| | TGMS1000-10004_ | Titan Silver | without | 25 pcs |
| sec.sash gear 8 sz 80 | TGMS1010-10001_ | Titan Silver | without | 1 pc |
| | TGMS1010-10004_ | Titan Silver | without | 25 pcs |
| sec.sash gear 8 sz 120 2SB 70 | TGMS1050-10001_ | Titan Silver | without | 1 pc |
| | TGMS1050-10004_ | Titan Silver | without | 25 pcs |
| sec.sash gear 8 sz 160 2SB 70 | TGMS1060-10001_ | Titan Silver | without | 1 pc |
| | TGMS1060-10002_ | Titan Silver | without | 10 pcs |
| sec.sash gear 8 sz 200 3SB 70 | TGMS1070-10001_ | Titan Silver | without | 1 pc |
| | TGMS1070-10002_ | Titan Silver | without | 10 pcs |

| Description | Material | Page |
|---|---|---|
| Application matrix:<br>gear OS/PZ AF, handle height constant | | 3.5 - 2 |
| gear OS/PZ-AF GK | TGKK0550, TGKK0560, TGKK0570, TGKK0580, TGKK0740, TGKK0750, TGKK0620, TGKK0630 | 3.5 - 4 |
| Application matrix:<br>gear OS/PZ AF, handle height centre/variable | | 3.5 - 6 |
| gear OS/PZ-AF GM | TGMK0500, TGMK0510, TGMK0520, TGMK0550, TGMK0560, TGMK0540, TGMK0570 | 3.5 - 8 |
| Application matrix:<br>sec. sash gear OS/PZ AF, handle height constant | | 3.5 - 10 |
| sec. sash gear OS/PZ AF GK | TGKK0650, TGKK0660, TGKK0670, TGKK0680, TGKK0760, TGKK0770, TGKK0720, TGKK0730 | 3.5 - 12 |
| Application matrix:<br>sec. sash gear OS/PZ AF, handle height centre/variable | | 3.5 - 14 |
| sec. sash gear OS/PZ-AF GM | TGMK0500, TGMK0610, TGMK0620, TGMK0650,TGMK0660, TGMK0640, TGMK0670 | 3.5 - 16 |
| Drill holes and routing gear-set timber | | 3.5 - 18 |
| Drill holes and routing gear-set PVC | | 3.5 - 19 |
| gear-set | TMSL4200, TMSL4250, TMSL4300, TMSL4350, TMSL4400, TMSL4450, TMSL4500, TMSL4550 | 3.5 - 20 |
| gear-set | TMSL0250, TMSL0300, TMSL0350, TMSL0400, TMSL0450, TMSL0550 | 3.5 - 21 |
| gear-set PZ | TMSL1250, TMSL1300, TMSL1350, TMSL1400, TMSL1450, TMSL1500, TMSL1550 | 3.5 - 22 |
| gear-set PZ22 | TMSL2250, TMSL2350, TMSL2400, TMSL2450, TMSL2500 | 3.5 - 23 |

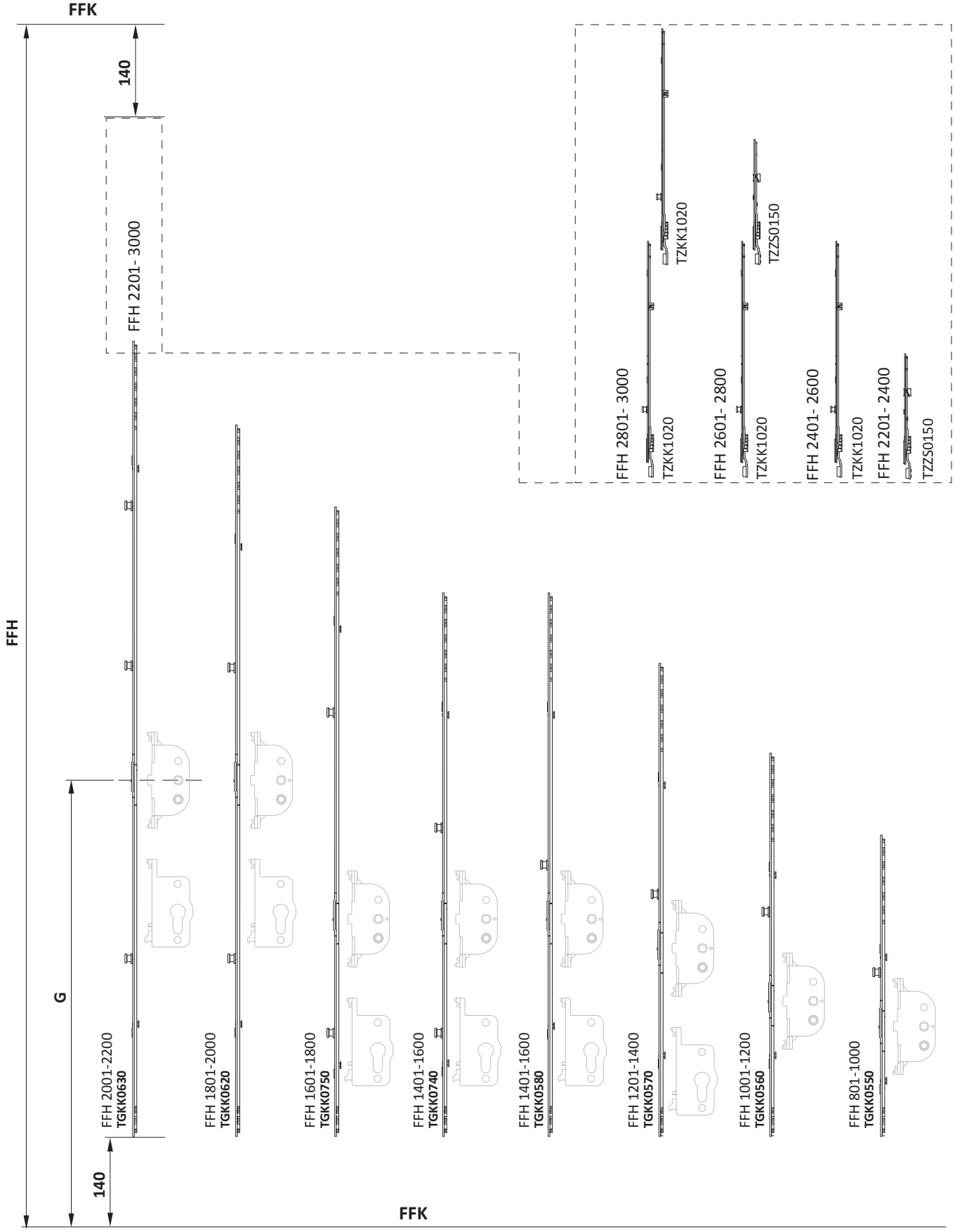
FFK
140
FFH 2201- 3000
FFH
G
140
FFK
FFH 2001-2200
TGKK0630
FFH 1801-2000
TGKK0620
FFH 1601-1800
TGKK0750
FFH 1401-1600
TGKK0740
FFH 1401-1600
TGKK0580
FFH 1201-1400
TGKK0570
FFH 1001-1200
TGKK0560
FFH 801-1000
TGKK0550
FFH 2801- 3000
TZKK1020
FFH 2601- 2800
TZKK1020
TZZS0150
FFH 2401- 2600
TZKK1020
FFH 2201- 2400
TZZS0150

# Application matrix for gear OS/PZ-AF

Handle height constant



| Material number | Description | Material number | Description | FFH (mm) | G (mm) |
|---|---|---|---|---|---|
| **TGKK0550** | gear OS-AF sz 80/G400 1RS | | | 801 - 1000 | 400 |
| **TGKK0560** | gear OS-AF sz 100/G500 1RS | | | 1001 - 1200 | 500 |
| **TGKK0570** | gear OS/PZ-AF sz 120/G600 1RS | | | 1201 - 1400 | 600 |
| **TGKK0580** | gear OS/PZ-AF sz 140/G700 1RS | | | 1401 - 1600 | 700 |
| **TGKK0740** | gear OS/PZ-AF sz 140/G700 2RS 70 | | | 1401 - 1600 | 700 |
| **TGKK0750** | gear OS/PZ-AF sz 160/G700 2RS 70 | | | 1601 - 1800 | 700 |
| **TGKK0620** | gear OS/PZ-AF sz 180/G1000 2RS 70 | | | 1801 - 2000 | 1000 |
| **TGKK0630** | gear OS/PZ-AF sz 200/G1000 3RS 70 | | | 2001 - 2200 | 1000 |
| **TGKK0630** | gear OS/PZ-AF sz 200/G1000 3RS 70 | **TZZS0150** | linkage AF sz 1 | 2201 - 2400 | 1000 |
| **TGKK0630** | gear OS/PZ-AF sz 200/G1000 3RS 70 | **TZKK1020** | linkage KK/AF sz 2 1RS | 2401 - 2600 | 1000 |
| **TGKK0630** | gear OS/PZ-AF sz 200/G1000 3RS 70 | **TZKK1020** | linkage KK/AF sz 2 1RS | 2601 - 2800 | 1000 |
| | | **TZZS0150** | linkage AF sz 1 | | |
| **TGKK0630** | gear OS/PZ-AF sz 200/G1000 3RS 70 | **TZKK1020** | linkage KK/AF sz 2 1RS | 2801 - 3000 | 1000 |
| | | **TZKK1020** | linkage KK/AF sz 2 1RS | | |

## Technical information

| Part number | Description | FFH | Dimensions (mm) | | | | | | |
|---|---|---|---|---|---|---|---|---|---|
| | | | G1 | A | B | C | D | | |
| TGKK0550-... | gear OS-AF sz 80/G400 1RS | 801 - 1000 | 400 | 720 | 80 | - | - | 1 | 3 |
| TGKK0560-... | gear OS-AF sz 100/G500 1RS | 1001 - 1200 | 500 | 920 | 180 | - | - | 1 | 5 |
| TGKK0570-... | gear OS/PZ-AF size120/G600 1RS | 1201 - 1400 | 600 | 1120 | 80 | - | - | 1 | 5 |
| TGKK0580-... | gear OS/PZ-AF sz 140/G700 1RS | 1401 - 1600 | 700 | 1320 | 80 | - | - | 1 | 5 |
| TGKK0740-... | gear OS/PZ-AF sz 140/G700 2RS 70 | 1401 - 1600 | 700 | 1320 | 180 | 320 | - | 2 | 7 |
| TGKK0750-... | gear OS/PZ-AF sz 160/G700 2RS 70 | 1601 - 1800 | 700 | 1520 | 380 | 320 | - | 2 | 7 |
| TGKK0620-... | gear OS/PZ-AF sz.180/G1000 2RS 70 | 1801 - 2000 | 1000 | 1720 | 280 | 420 | - | 2 | 7 |
| TGKK0630-... | gear OS/PZ-AF sz.200/G1000 3RS 70 | 2001 - 3000 | 1000 | 1920 | 280 | 420 | 680 | 3 | 8 |

- Handle height constant
- PZ box assembly only possible on espagnolette size 120 upwards

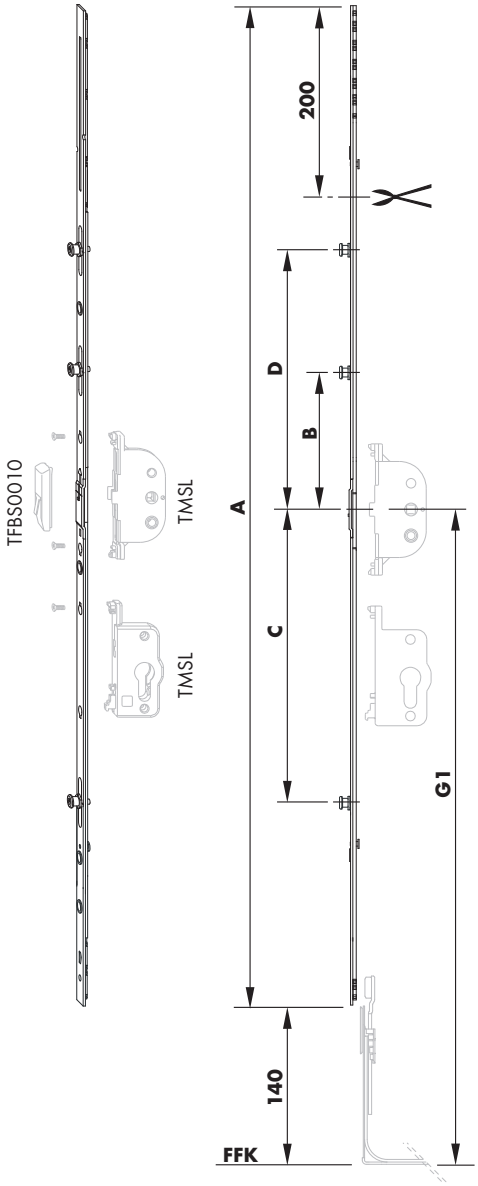


3.5

## Sales information

| Description | Part number | Surface | Colour | Box quantity |
|---|---|---|---|---|
| gear OS-AF sz 80/G400 1RS | TGKK0550-10001_ | Titan Silver | without | 1 pc |
| | TGKK0550-10004_ | Titan Silver | without | 25 pcs |
| gear OS-AF sz 100/G500 1RS | TGKK0560-10001_ | Titan Silver | without | 1 pc |
| | TGKK0560-10004_ | Titan Silver | without | 25 pcs |
| gear OS/PZ-AF size120/G600 1RS | TGKK0570-10001_ | Titan Silver | without | 1 pc |
| | TGKK0570-10004_ | Titan Silver | without | 25 pcs |
| gear OS/PZ-AF sz 140/G700 1RS | TGKK0580-10001_ | Titan Silver | without | 1 pc |
| | TGKK0580-10004_ | Titan Silver | without | 25 pcs |
| gear OS/PZ-AF sz 140/G700 2RS 70 | TGKK0740-10001_ | Titan Silver | without | 1 pc |
| | TGKK0740-10004_ | Titan Silver | without | 25 pcs |
| gear OS/PZ-AF sz 160/G700 2RS 70 | TGKK0750-10001_ | Titan Silver | without | 1 pc |
| | TGKK0750-10002_ | Titan Silver | without | 10 pcs |
| gear OS/PZ-AF sz.180/G1000 2RS 70 | TGKK0620-10001_ | Titan Silver | without | 1 pc |
| | TGKK0620-10002_ | Titan Silver | without | 10 pcs |
| gear OS/PZ-AF sz.200/G1000 3RS 70 | TGKK0630-10001_ | Titan Silver | without | 1 pc |
| | TGKK0630-10002_ | Titan Silver | without | 10 pcs |

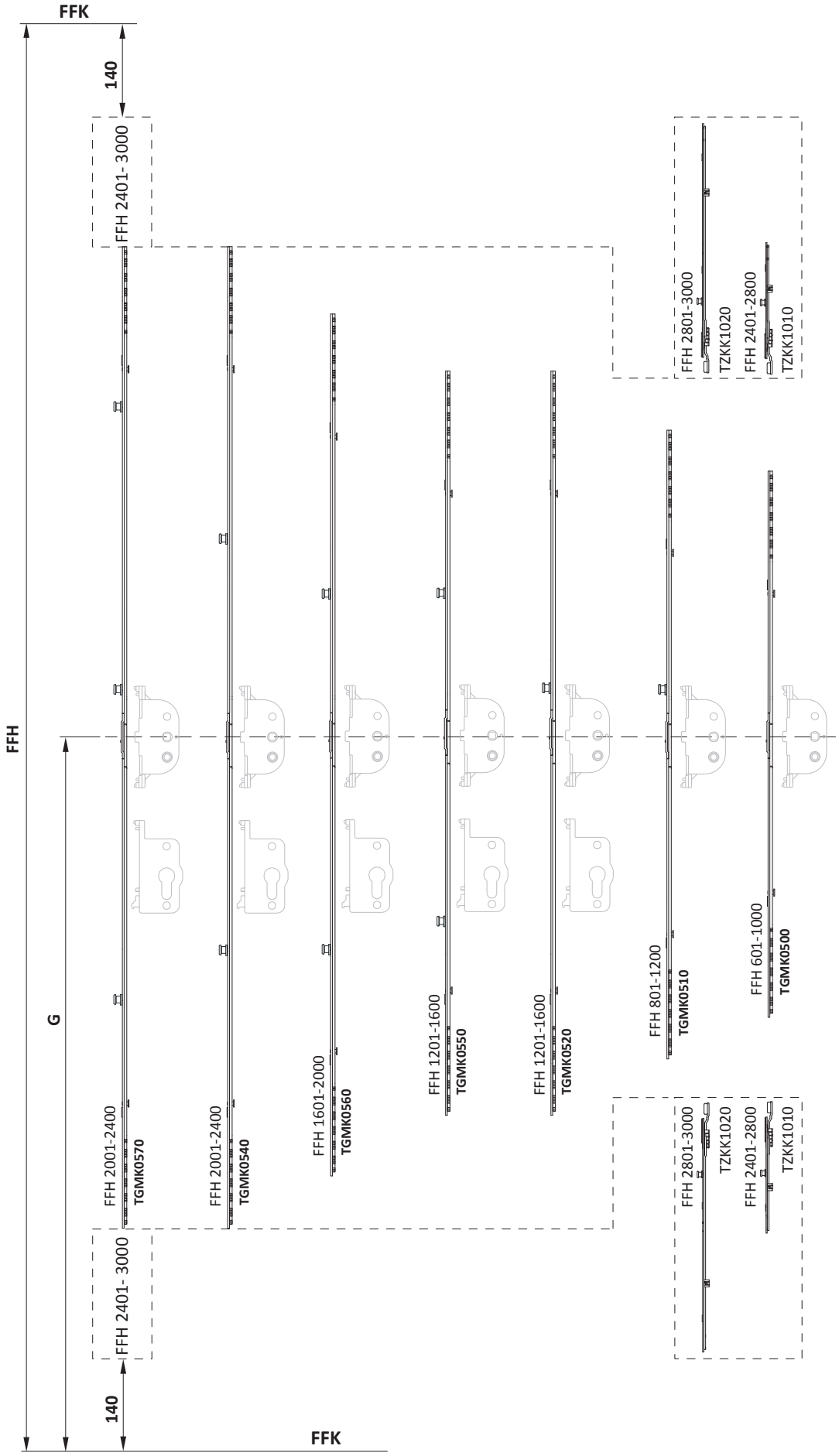
FFK
140
FFH 2401- 3000
FFH 2801-3000
TZKK1020
FFH 2401-2800
TZKK1010
FFH
G
FFH 2001-2400
TGMK0570
FFH 2001-2400
TGMK0540
FFH 1601-2000
TGMK0560
FFH 1201-1600
TGMK0550
FFH 1201-1600
TGMK0520
FFH 801-1200
TGMK0510
FFH 601-1000
TGMK0500
FFH 2801-3000
TZKK1020
FFH 2401-2800
TZKK1010
FFH 2401- 3000
140
FFK

| Material number | Description | Material number | Description | FFH (mm) | G (mm) |
|---|---|---|---|---|---|
| **TGMK0500** | gear OS-AF sz 60 | | | 601 - 1000 | 300 - 500 |
| **TGMK0510** | gear OS-AF sz 80 1RS | | | 801 - 1200 | 400 - 600 |
| **TGMK0520** | gear OS/PZ-AF sz 120 1RS | | | 1201 - 1600 | 600 - 800 |
| **TGMK0550** | gear OS/PZ-AF sz 120 2RS 70 | | | 1201 - 1600 | 600 - 800 |
| **TGMK0560** | gear OS/PZ-AF sz 160 2RS 70 | | | 1601 - 2000 | 800 - 1000 |
| **TGMK0540** | gear OS/PZ-AF sz 200 2RS | | | 2001 - 2400 | 1000 - 1200 |
| **TGMK0540** | gear OS/PZ-AF sz 200 2RS | **TZKK1010** | **2** linkages KK/AF sz 1 1RS | 2401 - 2800 | 1200 - 1400 |
| **TGMK0540** | gear OS/PZ-AF sz 200 2RS | **TZKK1020** | **2** linkages KK/AF sz 2 1RS | 2801 - 3000 | 1400 - 1500 |
| **TGMK0570** | gear OS/PZ-AF sz 200 3RS 70 | | | 2001 - 2400 | 1000 - 1200 |
| **TGMK0570** | gear OS/PZ-AF sz 200 3RS 70 | **TZKK1010** | **2** linkages KK/AF sz 1 1RS | 2401 - 2800 | 1200 - 1400 |
| **TGMK0570** | gear OS/PZ-AF sz 200 3RS 70 | **TZKK1020** | **2** linkages KK/AF sz 2 1RS | 2801 - 3000 | 1400 - 1500 |

## Technical information

| Part number | Description | FFH | Dimensions (mm) | | | | | | |
|---|---|---|---|---|---|---|---|---|---|
| | | | G2 | A | B | C | D | | |
| TGMK0500-... | gear OS-AF sz 60 | 600 - 1000 | 300 - 500 | 720 | - | - | - | 0 | 1 |
| TGMK0510-... | gear OS-AF sz 80 1RS | 801 - 1200 | 400 - 600 | 920 | 80 | - | - | 1 | 3 |
| TGMK0520-... | gear OS/PZ-AF sz 120 1RS | 1201 - 1600 | 600 - 800 | 1320 | 80 | - | - | 1 | 4 |
| TGMK0550-... | gear OS/PZ-AF sz 120 2RS 70 | 1201 - 1600 | 600 - 800 | 1320 | 280 | 320 | - | 2 | 4 |
| TGMK0560-... | gear OS/PZ-AF sz 160 2RS 70 | 1601 - 2000 | 800 - 1000 | 1720 | 280 | 408 | - | 2 | 6 |
| TGMK0540-... | gear OS/PZ-AF sz 200 2RS | 2001 - 3000 | 1000 - 1500 | 2120 | 392 | 408 | - | 2 | 8 |
| TGMK0570-... | gear OS/PZ-AF sz 200 3RS 70 | 2001 - 3000 | 1000 - 1500 | 2120 | 80 | 498 | 502 | 3 | 8 |

- Handle height centre/variable
- PZ box assembly only possible on espagnolette size 120 upwards

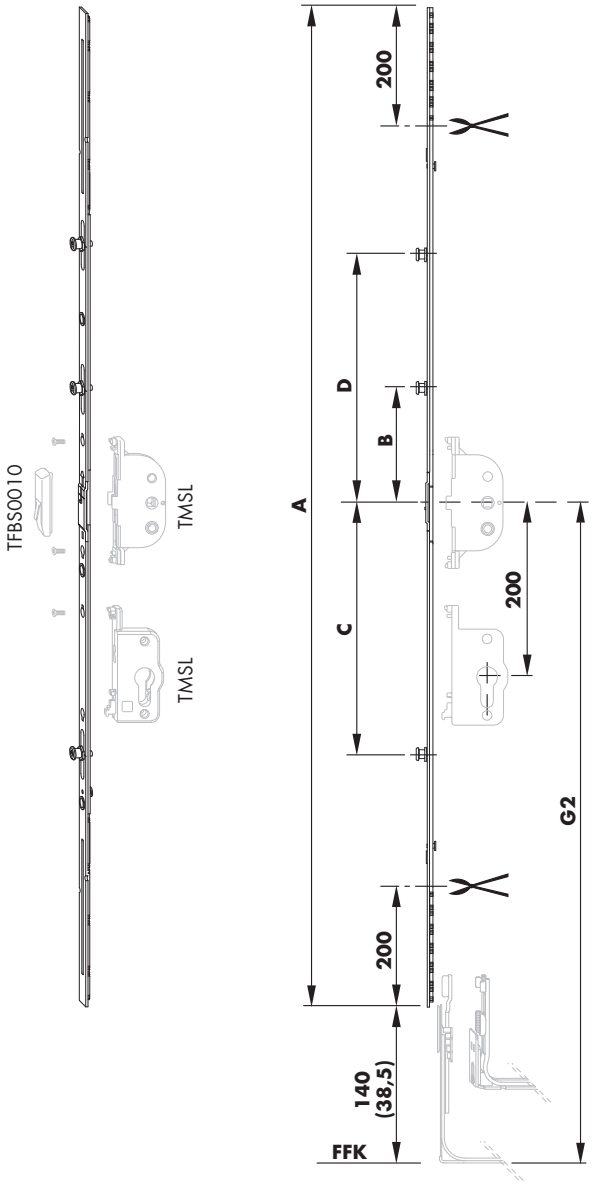


3.5

## Sales information

| Description | Part number | Surface | Colour | Box quantity |
|---|---|---|---|---|
| gear OS-AF sz 60 | TGMK0500-10001_ | Titan Silver | without | 1 pc |
| | TGMK0500-10004_ | Titan Silver | without | 25 pcs |
| gear OS-AF sz 80 1RS | TGMK0510-10001_ | Titan Silver | without | 1 pc |
| | TGMK0510-10004_ | Titan Silver | without | 25 pcs |
| gear OS/PZ-AF sz 120 1RS | TGMK0520-10001_ | Titan Silver | without | 1 pc |
| | TGMK0520-10004_ | Titan Silver | without | 25 pcs |
| gear OS/PZ-AF sz 120 2RS 70 | TGMK0550-10001_ | Titan Silver | without | 1 pc |
| | TGMK0550-10004_ | Titan Silver | without | 25 pcs |
| gear OS/PZ-AF sz 160 2RS 70 | TGMK0560-10001_ | Titan Silver | without | 1 pc |
| | TGMK0560-10002_ | Titan Silver | without | 10 pcs |
| gear OS/PZ-AF sz 200 2RS | TGMK0540-10001_ | Titan Silver | without | 1 pc |
| | TGMK0540-10002_ | Titan Silver | without | 10 pcs |
| gear OS/PZ-AF sz 200 3RS 70 | TGMK0570-10001_ | Titan Silver | without | 1 pc |
| | TGMK0570-10002_ | Titan Silver | without | 10 pcs |

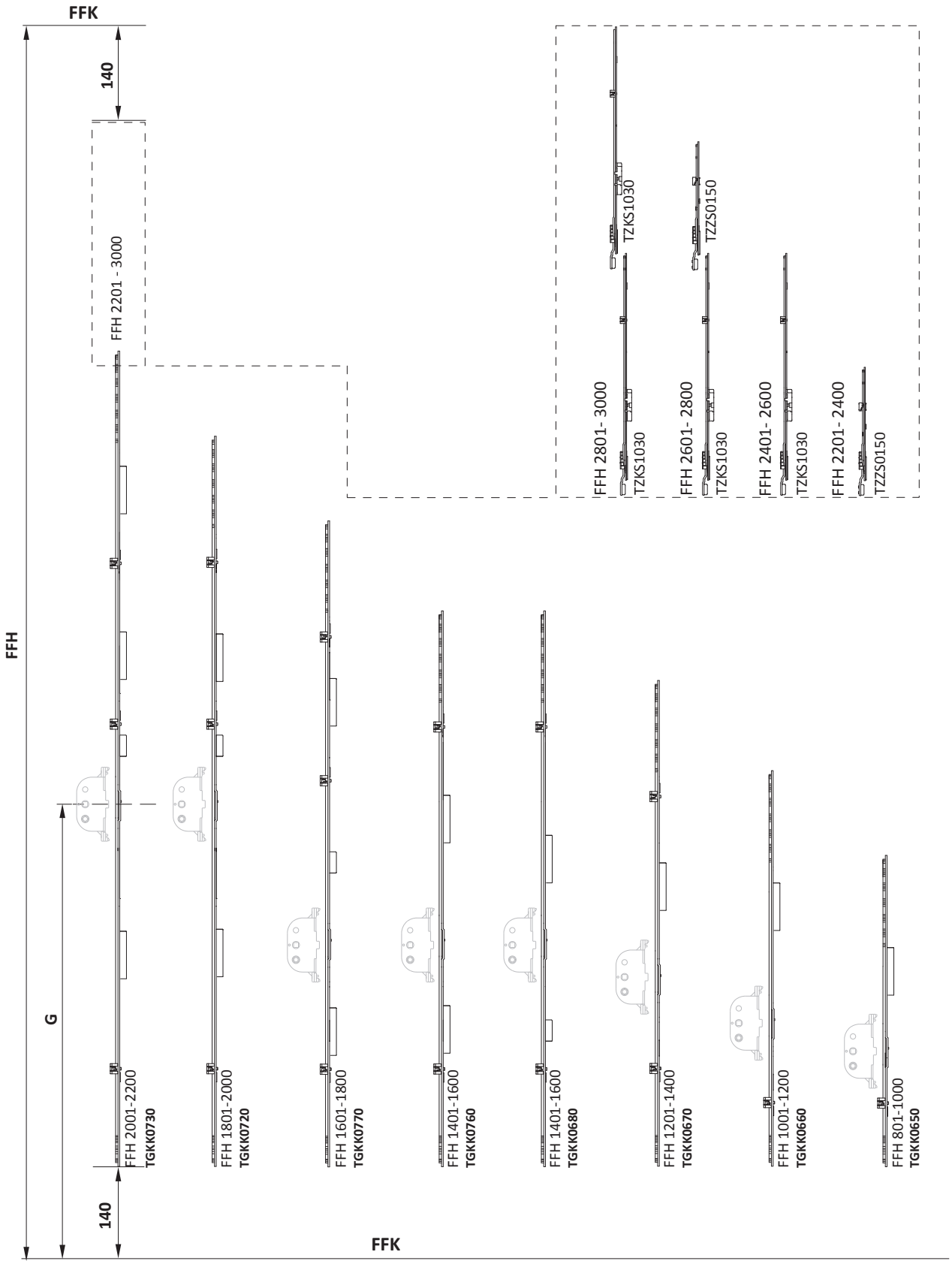
FFK
140
FFH
G
140
FFK
FFH 2201 - 3000
FFH 2001-2200
TGKK0730
FFH 1801-2000
TGKK0720
FFH 1601-1800
TGKK0770
FFH 1401-1600
TGKK0760
FFH 1401-1600
TGKK0680
FFH 1201-1400
TGKK0670
FFH 1001-1200
TGKK0660
FFH 801-1000
TGKK0650
FFH 2801- 3000
TZKS1030
TZKS1030
FFH 2601- 2800
TZZS0150
TZKS1030
FFH 2401- 2600
TZKS1030
FFH 2201- 2400
TZZS0150

# Application matrix sec. sash gear OS/PZ-AF

Handle height constant



| Material number | Description | Material number | Description | FFH (mm) | G (mm) In the main sash |
|---|---|---|---|---|---|
| **TGKK0650** | gear OS-AF sz 80 1SB | | | 801 - 1000 | 400 |
| **TGKK0660** | gear OS-AF sz 100 1SB | | | 1001 - 1200 | 500 |
| **TGKK0670** | gear OS/PZ-AF sz 120 1SB | | | 1201 - 1400 | 600 |
| **TGKK0680** | gear OS/PZ-AF sz 140 1SB | | | 1401 - 1600 | 700 |
| **TGKK0760** | gear OS/PZ-AF sz 140 2SB 70 | | | 1401 - 1600 | 700 |
| **TGKK0770** | gear OS/PZ-AF sz 160 2SB 70 | | | 1601 - 1800 | 700 |
| **TGKK0720** | gear OS/PZ-AF sz 180 2SB 70 | | | 1801 - 2000 | 1000 |
| **TGKK0730** | gear OS/PZ-AF sz 200 3SB 70 | | | 2001 - 2200 | 1000 |
| **TGKK0730** | gear OS/PZ-AF sz 200 3SB 70 | **TZZS0150** | linkage AF sz 1 | 2201 - 2400 | 1000 |
| **TGKK0730** | gear OS/PZ-AF sz 200 3SB 70 | **TZKS1030** | linkage AF sz 2 1SB-RS | 2401 - 2600 | 1000 |
| **TGKK0730** | gear OS/PZ-AF sz 200 3SB 70 | **TZKS1030** | linkage AF sz 2 1SB-RS | 2601 - 2800 | 1000 |
| | | **TZZS0150** | linkage AF sz 1 | | |
| **TGKK0730** | gear OS/PZ-AF sz 200 3SB 70 | **TZKS1030** | linkage AF sz 2 1SB-RS | 2801 - 3000 | 1000 |
| | | **TZKS1030** | linkage AF sz 2 1SB-RS | | |

## Technical information

| Part number | Description | FFH | Dimensions (mm) | | | |
|---|---|---|---|---|---|---|
| | | | G1 | A | | |
| TGKK0650-... | gear OS-AF sz 80 1SB | 801 - 1000 | 400 | 720 | 0 | 4 |
| TGKK0660-... | gear OS-AF sz 100 1SB | 1001 - 1200 | 500 | 920 | 0 | 6 |
| TGKK0670-... | gear OS/PZ-AF sz 120 1SB | 1201 - 1400 | 600 | 1120 | 0 | 5 |
| TGKK0680-... | gear OS/PZ-AF sz 140 1SB | 1401 - 1600 | 700 | 1320 | 0 | 5 |
| TGKK0760-... | gear OS/PZ-AF sz 140/G700 2SB 70 | 1401 - 1600 | 700 | 1320 | 0 | 7 |
| TGKK0770-... | gear OS/PZ-AF sz 160/G700 2SB 70 | 1601 - 1800 | 700 | 1520 | 0 | 8 |
| TGKK0720-... | gear OS/PZ-AF sz 180 2SB 70 | 1801 - 2000 | 1000 | 1720 | 0 | 8 |
| TGKK0730-... | gear OS/PZ-AF sz 200 3SB 70 | 2001 - 3000 | 1000 | 1920 | 0 | 10 |

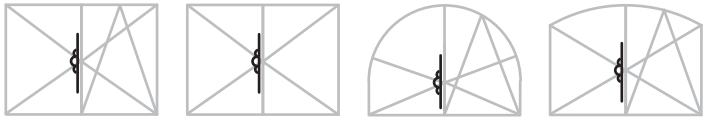

- Handle height constant
- G1 in the main sash
- Use in slave sashes with opposing fitting groove

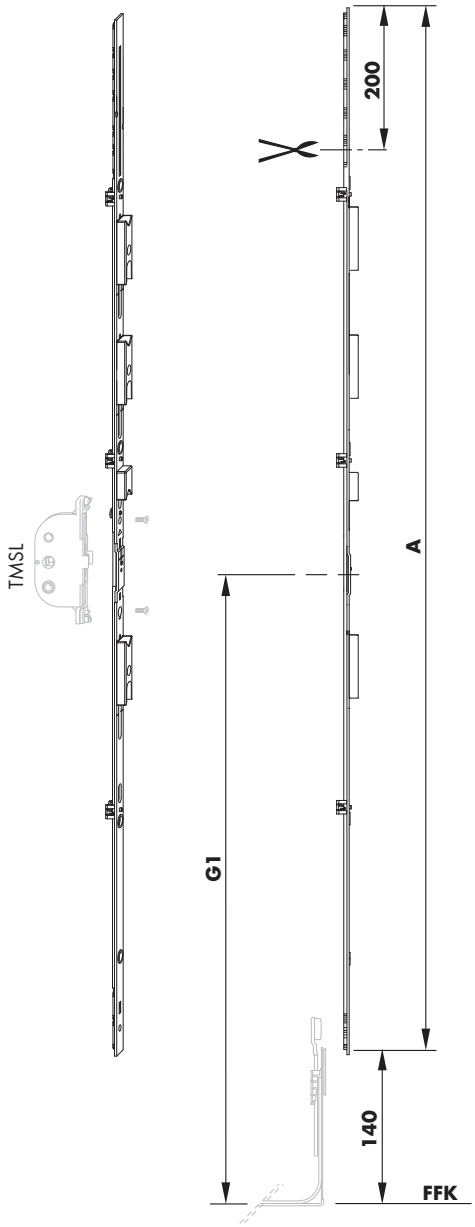

## Sales information

| Description | Part number | Surface | Colour | Box quantity |
|---|---|---|---|---|
| gear OS-AF sz 80 1SB | TGKK0650-10001_ | Titan Silver | without | 1 pc |
| | TGKK0650-10004_ | Titan Silver | without | 25 pcs |
| gear OS-AF sz 100 1SB | TGKK0660-10001_ | Titan Silver | without | 1 pc |
| | TGKK0660-10004_ | Titan Silver | without | 25 pcs |
| gear OS/PZ-AF sz 120 1SB | TGKK0670-10001_ | Titan Silver | without | 1 pc |
| | TGKK0670-10004_ | Titan Silver | without | 25 pcs |
| gear OS/PZ-AF sz 140 1SB | TGKK0680-10001_ | Titan Silver | without | 1 pc |
| | TGKK0680-10004_ | Titan Silver | without | 25 pcs |
| gear OS/PZ-AF sz 140/G700 2SB 70 | TGKK0760-10001_ | Titan Silver | without | 1 pc |
| | TGKK0760-10004_ | Titan Silver | without | 25 pcs |
| gear OS/PZ-AF sz 160/G700 2SB 70 | TGKK0770-10001_ | Titan Silver | without | 1 pc |
| | TGKK0770-10002_ | Titan Silver | without | 10 pcs |
| gear OS/PZ-AF sz 180 2SB 70 | TGKK0720-10001_ | Titan Silver | without | 1 pc |
| | TGKK0720-10002_ | Titan Silver | without | 10 pcs |
| gear OS/PZ-AF sz 200 3SB 70 | TGKK0730-10001_ | Titan Silver | without | 1 pc |
| | TGKK0730-10002_ | Titan Silver | without | 10 pcs |

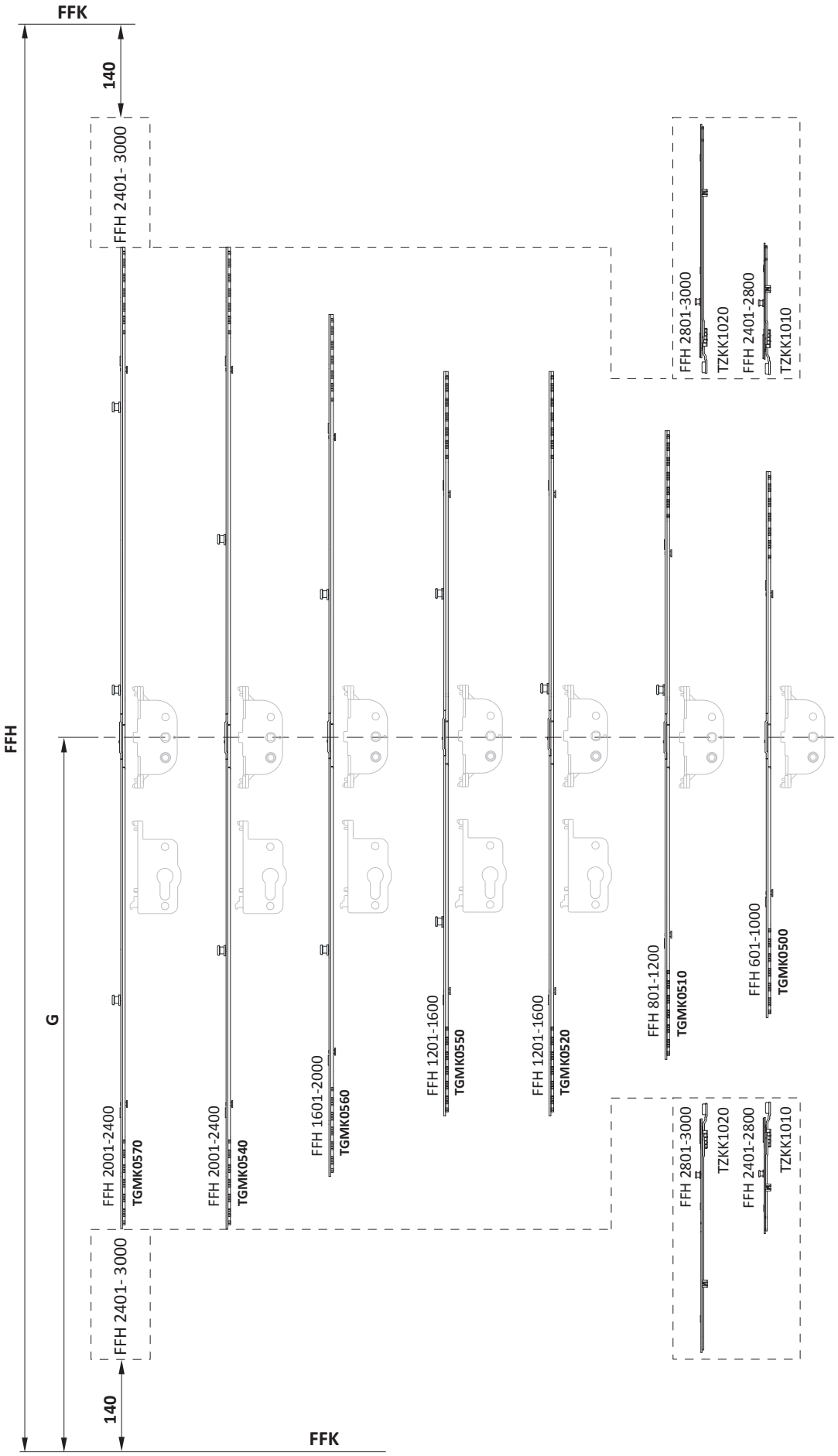
FFK
140
FFH 2401- 3000
FFH 2801-3000
TZKK1020
FFH 2401-2800
TZKK1010
FFH
G
FFH 2001-2400
TGMK0570
FFH 2001-2400
TGMK0540
FFH 1601-2000
TGMK0560
FFH 1201-1600
TGMK0550
FFH 1201-1600
TGMK0520
FFH 801-1200
TGMK0510
FFH 601-1000
TGMK0500
FFH 2801-3000
TZKK1020
FFH 2401-2800
TZKK1010
FFH 2401- 3000
140
FFK

| Material number | Description | Material number | Description | FFH (mm) | G (mm) In the main sash |
|---|---|---|---|---|---|
| **TGMK0500** | gear OS-AF sz 60 | | | 600 - 1000 | 300 - 500 |
| **TGMK0610** | gear OS-AF sz 80 1SB | | | 801 - 1200 | 400 - 600 |
| **TGMK0620** | gear OS/PZ-AF sz 120 1SB | | | 1201 - 1600 | 600 - 800 |
| **TGMK0650** | gear OS/PZ-AF sz 120 2SB 70 | | | 1201 - 1600 | 600 - 800 |
| **TGMK0660** | gear OS/PZ-AF sz 160 2SB 70 | | | 1601 - 2000 | 800 - 1000 |
| **TGMK0640** | gear OS/PZ-AF sz 200 2SB | | | 2001 - 2400 | 1000 - 1200 |
| **TGMK0640** | gear OS/PZ-AF sz 200 2SB | **TZKS1020** | linkage AF sz 1 1SB-RS | 2401 - 2800 | 1200 - 1400 |
| | | **TZKS1060** | linkage AF sz 1 1SB-VSU | | |
| **TGMK0640** | gear OS/PZ-AF sz 200 2SB | **TZKS1030** | linkage AF sz 2 1SB-RS | 2801 - 3000 | 1400 - 1500 |
| | | **TZKS1070** | linkage AF sz 2 1SB-VSU | | |
| **TGMK0670** | gear OS/PZ-AF sz 200 3SB 70 | | | 2001 - 2400 | 1000 - 1200 |
| **TGMK0670** | gear OS/PZ-AF sz 200 3SB 70 | **TZKS1020** | linkage AF sz 1 1SB-RS | 2401 - 2800 | 1200 - 1400 |
| | | **TZKS1060** | linkage AF sz 1 1SB-VSU | | |
| **TGMK0670** | gear OS/PZ-AF sz 200 3SB 70 | **TZKS1030** | linkage AF sz 2 1SB-RS | 2801 - 3000 | 1400 - 1500 |
| | | **TZKS1070** | linkage AF sz 2 1SB-VSU | | |

## Technical information

| Part number | Description | FFH | Dimensions (mm) | | | |
|---|---|---|---|---|---|---|
| | | | G2 | A | | |
| TGMK0500-... | gear OS-AF sz 60 | 600 - 1000 | 300 - 500 | 720 | 0 | 1 |
| TGMK0610-... | gear OS-AF sz 80 1SB | 801 - 1200 | 400 - 600 | 920 | 0 | 4 |
| TGMK0620-... | gear OS/PZ-AF sz 120 1SB | 1201 - 1600 | 600 - 800 | 1320 | 0 | 5 |
| TGMK0650-... | gear OS/PZ-AF sz 120 2SB 70 | 1201 - 1600 | 600 - 800 | 1320 | 0 | 6 |
| TGMK0660-... | gear OS/PZ-AF sz 160 2SB 70 | 1601 - 2000 | 800 - 1000 | 1720 | 0 | 7 |
| TGMK0640-... | gear OS/PZ-AF sz 200 2SB | 2001 - 3000 | 1000 - 1500 | 2120 | 0 | 9 |
| TGMK0670-... | gear OS/PZ-AF sz 200 3SB 70 | 2001 - 3000 | 1000 - 1500 | 2120 | 0 | 9 |

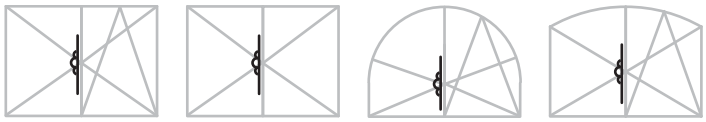

- Handle height centre/variable
- G2 in the main sash
- Use in slave sashes with opposing fitting groove

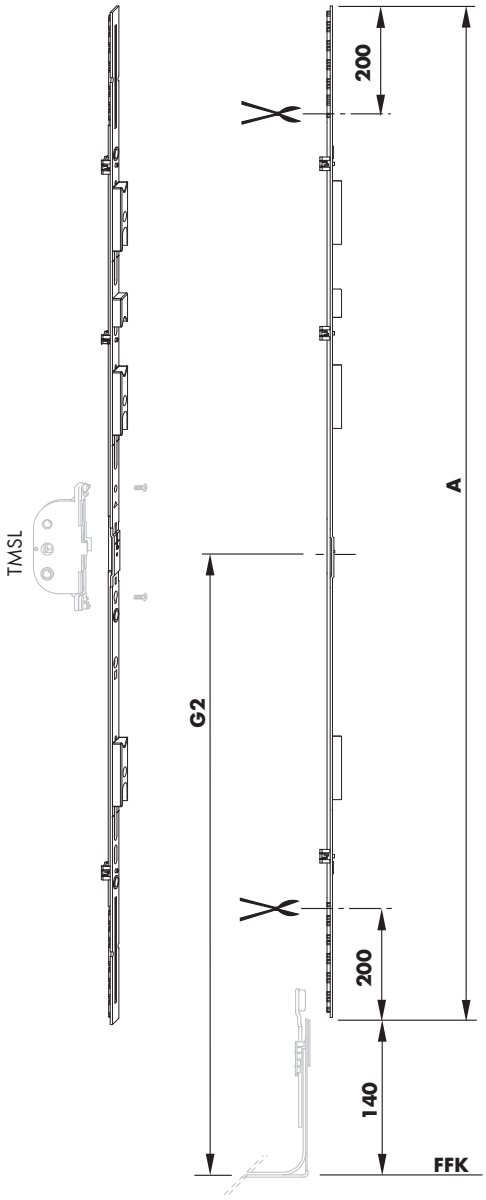

## Sales information

| Description | Part number | Surface | Colour | Box quantity |
|---|---|---|---|---|
| gear OS-AF sz 60 | TGMK0500-10001_ | Titan Silver | without | 1 pc |
| | TGMK0500-10004_ | Titan Silver | without | 25 pcs |
| gear OS-AF sz 80 1SB | TGMK0610-10001_ | Titan Silver | without | 1 pc |
| | TGMK0610-10004_ | Titan Silver | without | 25 pcs |
| gear OS/PZ-AF sz 120 1SB | TGMK0620-10001_ | Titan Silver | without | 1 pc |
| | TGMK0620-10004_ | Titan Silver | without | 25 pcs |
| gear OS/PZ-AF sz 120 2SB 70 | TGMK0650-10001_ | Titan Silver | without | 1 pc |
| | TGMK0650-10004_ | Titan Silver | without | 25 pcs |
| gear OS/PZ-AF sz 160 2SB 70 | TGMK0660-10001_ | Titan Silver | without | 1 pc |
| | TGMK0660-10002_ | Titan Silver | without | 10 pcs |
| gear OS/PZ-AF sz 200 2SB | TGMK0640-10001_ | Titan Silver | without | 1 pc |
| | TGMK0640-10002_ | Titan Silver | without | 10 pcs |
| gear OS/PZ-AF sz 200 3SB 70 | TGMK0670-10001_ | Titan Silver | without | 1 pc |
| | TGMK0670-10002_ | Titan Silver | without | 10 pcs |

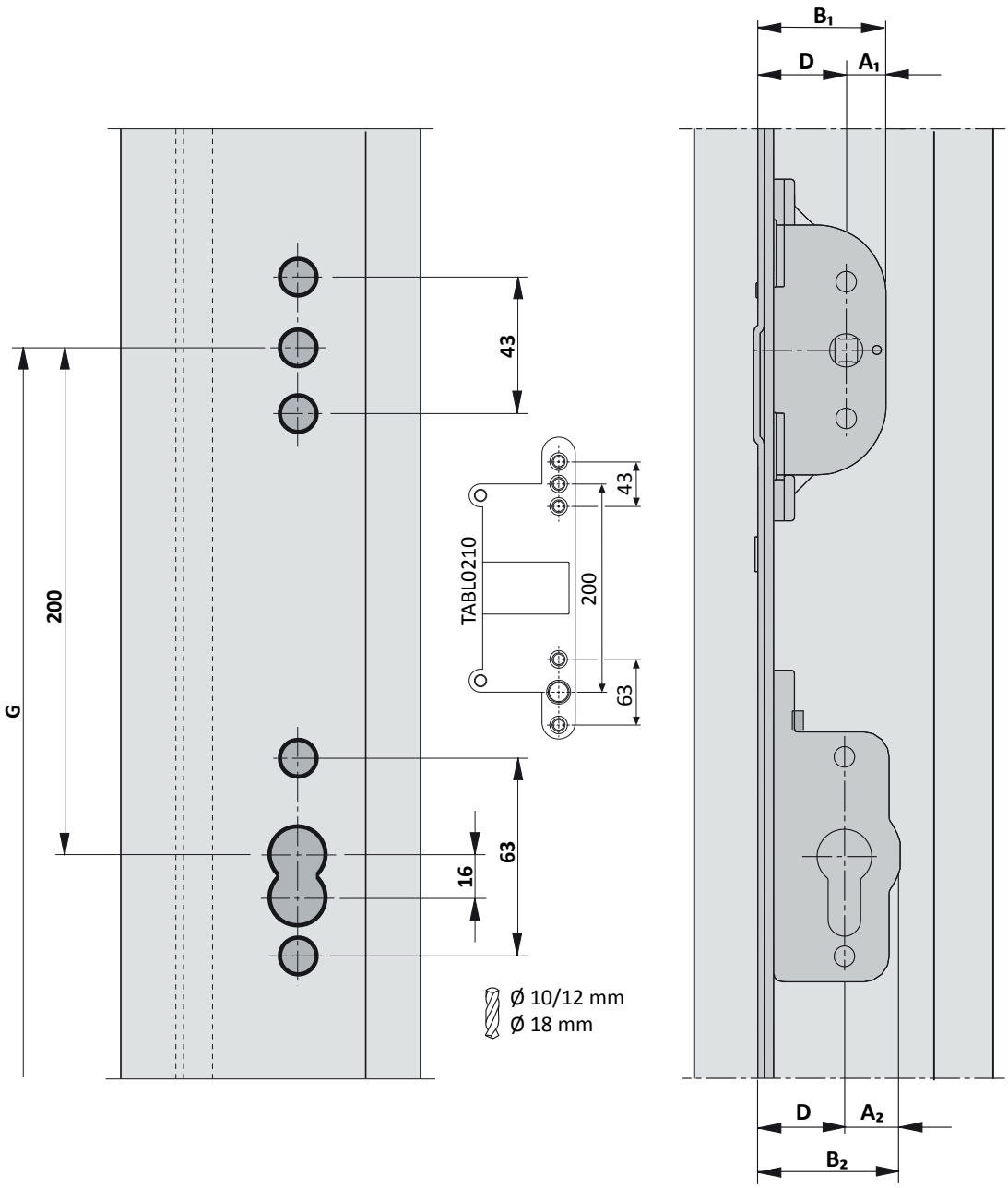


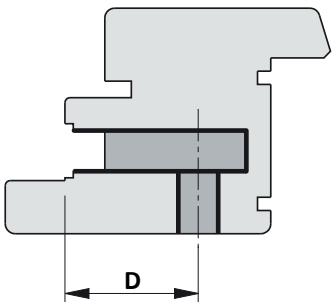


| (Backset) | Dimension (mm) | | | |
|---|---|---|---|---|
| D | $A_1$ | $B_1$ | $A_2$ | $B_2$ |
| **40** | 12,5 | 52,5 | 17 | 57 |
| **45** | 12,5 | 57,5 | 17 | 62 |
| **50** | 12,5 | 62,5 | 17 | 67 |
| **55** | 12,5 | 67,5 | 17 | 72 |

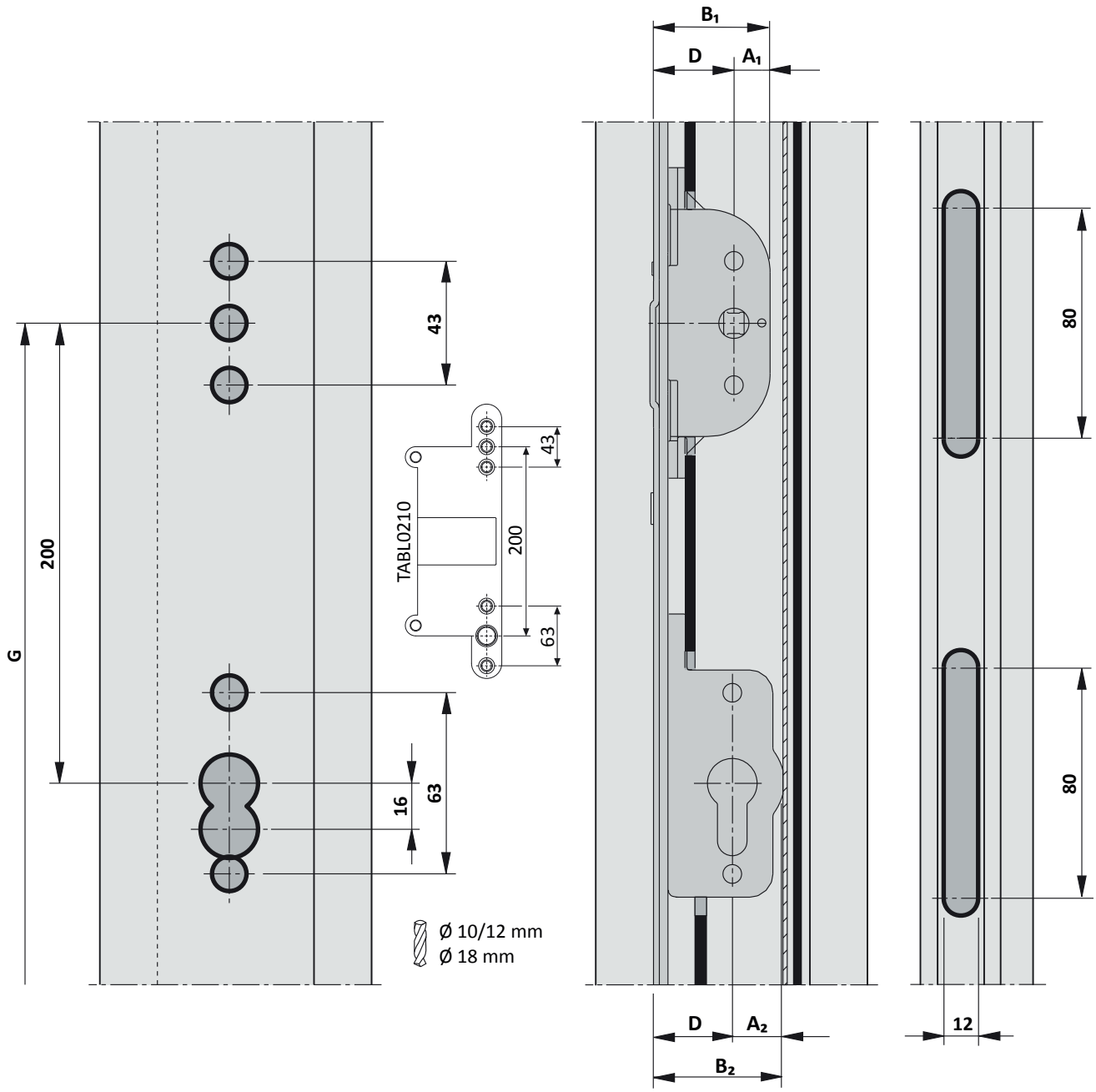


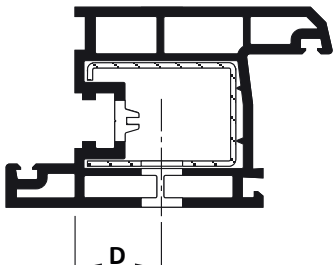


| (Backset) | Dimension (mm) | | | |
|---|---|---|---|---|
| D | $A_1$ | $B_1$ | $A_2$ | $B_2$ |
| **20** | 12,5 | 32,5 | - | - |
| **25** | 12,5 | 37,5 | 17 | 42 |
| **30** | 12,5 | 42,5 | 17 | 47 |
| **35** | 12,5 | 47,5 | 17 | 52 |
| **40** | 12,5 | 52,5 | 17 | 57 |
| **45** | 12,5 | 57,5 | 17 | 62 |
| **50** | 12,5 | 62,5 | 17 | 67 |
| **55** | 12,5 | 67,5 | 17 | 72 |

## Technical information

| Part number | Description | FFH | Dimensions (mm) | |
|---|---|---|---|---|
| | | | D | H |
| TMSL4200-... | gear set 20 M5 | 660 - 3000 | 20 | 12,50 |
| TMSL4250-... | gear set 25 M5 | 660 - 3000 | 25 | 12,50 |
| TMSL4300-... | gear set 30 M5 | 660 - 3000 | 30 | 12,50 |
| TMSL4350-... | gear set 35 M5 | 660 - 3000 | 35 | 12,50 |
| TMSL4400-... | gear set 40 M5 | 660 - 3000 | 40 | 12,50 |
| TMSL4450-... | gear set 45 M5 | 660 - 3000 | 45 | 12,50 |
| TMSL4500-... | gear set 50 M5 | 660 - 3000 | 50 | 12,50 |
| TMSL4550-... | gear set 55 M5 | 660 - 3000 | 55 | 12,50 |

- Please note:
  On timber windows, gear sets can only be used on backsets 40-55!
- * When mounting 2 handles, the screw thread in the lockcase must be drilled out
- Dimension D = backset
- Dimension H = rear backset
- **Note:**
  Do not exceed the max. 2.5 Nm torque while screwing on the gear box.

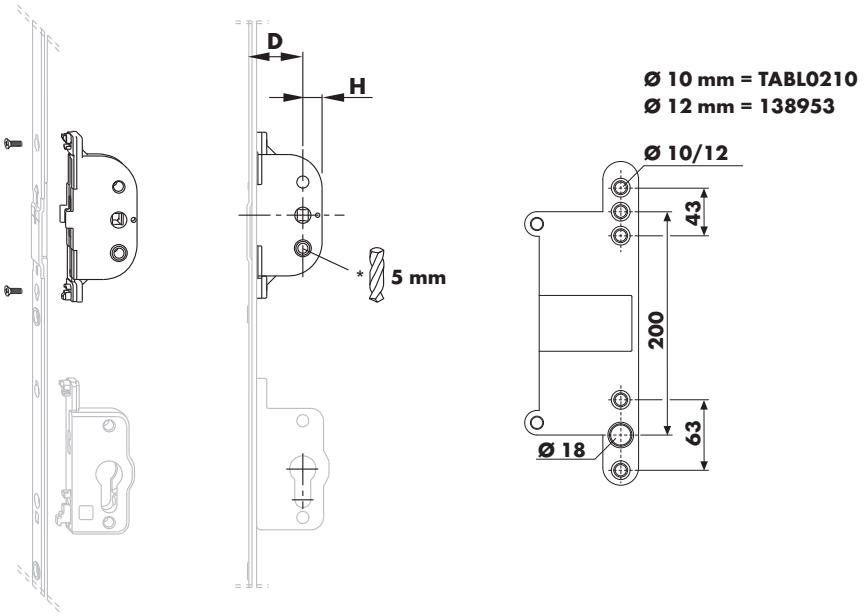


## Sales information

| Description | Part number | Surface | Colour | Box quantity |
|---|---|---|---|---|
| gear set 20 M5 | TMSL4200-10005_ | Titan Silver | without | 50 pcs |
| gear set 25 M5 | TMSL4250-10005_ | Titan Silver | without | 50 pcs |
| gear set 30 M5 | TMSL4300-10005_ | Titan Silver | without | 50 pcs |
| gear set 35 M5 | TMSL4350-10005_ | Titan Silver | without | 50 pcs |
| gear set 40 M5 | TMSL4400-10005_ | Titan Silver | without | 50 pcs |
| gear set 45 M5 | TMSL4450-10005_ | Titan Silver | without | 50 pcs |
| gear set 50 M5 | TMSL4500-10005_ | Titan Silver | without | 50 pcs |
| gear set 55 M5 | TMSL4550-10005_ | Titan Silver | without | 50 pcs |

## Technical information

| Part number | Description | FFH | Dimensions (mm) | |
|---|---|---|---|---|
| | | | D | H |
| TMSL0250-... | gear set 25 | 660 - 3000 | 25 | 12,50 |
| TMSL0300-... | gear set 30 | 660 - 3000 | 30 | 12,50 |
| TMSL0350-... | gear set 35 | 660 - 3000 | 35 | 12,50 |
| TMSL0400-... | gear set 40 | 660 - 3000 | 40 | 12,50 |
| TMSL0450-... | gear set 45 | 660 - 3000 | 45 | 12,50 |
| TMSL0550-... | gear set 55 | 660 - 3000 | 55 | 12,50 |

- Please note:
  On timber windows, gear sets can only be used on backsets 40-55!
- Dimension D = backset
- Dimension H = rear backset
- **Note:**
  Do not exceed the max. 2.5 Nm torque while screwing on the gear box.

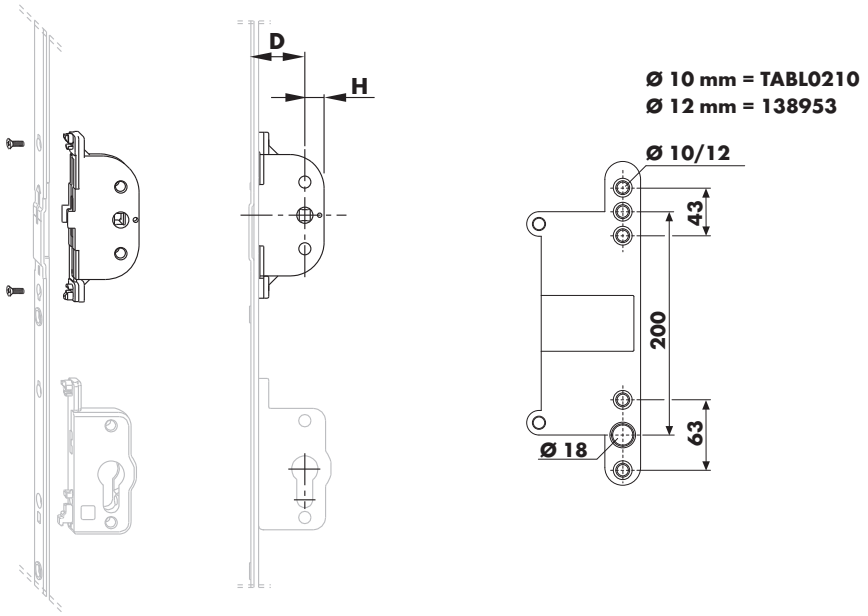


## Sales information

| Description | Part number | Surface | Colour | Box quantity |
|---|---|---|---|---|
| gear set 25 | TMSL0250-10005_ | Titan Silver | without | 50 pcs |
| gear set 30 | TMSL0300-10005_ | Titan Silver | without | 50 pcs |
| gear set 35 | TMSL0350-10005_ | Titan Silver | without | 50 pcs |
| gear set 40 | TMSL0400-10005_ | Titan Silver | without | 50 pcs |
| gear set 45 | TMSL0450-10005_ | Titan Silver | without | 50 pcs |
| gear set 55 | TMSL0550-10005_ | Titan Silver | without | 50 pcs |

## Technical information

| Part number | Description | FFH | Dimensions (mm) | |
|---|---|---|---|---|
| | | | D | H |
| TMSL1250-... | gear set PZ 25 | 1001 - 3000 | 25 | 17 |
| TMSL1300-... | gear set PZ 30 | 1001 - 3000 | 30 | 17 |
| TMSL1350-... | gear set PZ 35 | 1001 - 3000 | 35 | 17 |
| TMSL1400-... | gear set PZ 40 | 1001 - 3000 | 40 | 17 |
| TMSL1450-... | gear set PZ 45 | 1001 - 3000 | 45 | 17 |
| TMSL1500-... | gear set PZ 50 | 1001 - 3000 | 50 | 17 |
| TMSL1550-... | gear set PZ 55 | 1001 - 3000 | 55 | 17 |

- Please note:
  On timber windows, gear sets can only be used on backsets 40-55!
- Dimension D = backset
- Dimension H = rear backset
- **Note:**
  Do not exceed the max. 2.5 Nm torque while screwing on the gear box.

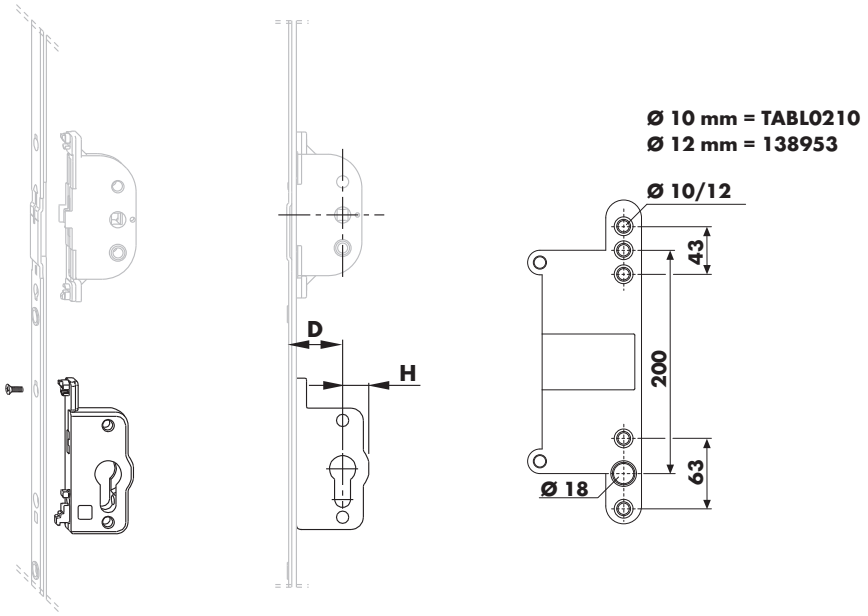


## Sales information

| Description | Part number | Surface | Colour | Box quantity |
|---|---|---|---|---|
| gear set PZ 25 | TMSL1250-10005_ | Titan Silver | without | 50 pcs |
| gear set PZ 30 | TMSL1300-10005_ | Titan Silver | without | 50 pcs |
| gear set PZ 35 | TMSL1350-10005_ | Titan Silver | without | 50 pcs |
| gear set PZ 40 | TMSL1400-10005_ | Titan Silver | without | 50 pcs |
| gear set PZ 45 | TMSL1450-10005_ | Titan Silver | without | 50 pcs |
| gear set PZ 50 | TMSL1500-10005_ | Titan Silver | without | 50 pcs |
| gear set PZ 55 | TMSL1550-10005_ | Titan Silver | without | 50 pcs |

## Technical information

| Part number | Description | FFH | Dimensions (mm) | |
|---|---|---|---|---|
| | | | D | H |
| TMSL2250-... | gear set PZ22 25 | 1001 - 3000 | 25 | 17 |
| TMSL2350-... | gear set PZ22 35 | 1001 - 3000 | 35 | 17 |
| TMSL2400-... | gear set PZ22 40 | 1001 - 3000 | 40 | 17 |
| TMSL2450-... | gear set PZ22 45 | 1001 - 3000 | 45 | 17 |
| TMSL2500-... | gear set PZ22 50 | 1001 - 3000 | 50 | 17 |

- Please note:
  On timber windows, gear sets can only be used on backsets 40-55!
- Dimension D = backset
- Dimension H = rear backset
- Drill out hole for profile cylinder (Ø 18) to 22 mm
- **Note:**
  Do not exceed the max. 2.5 Nm torque while screwing on the gear box.

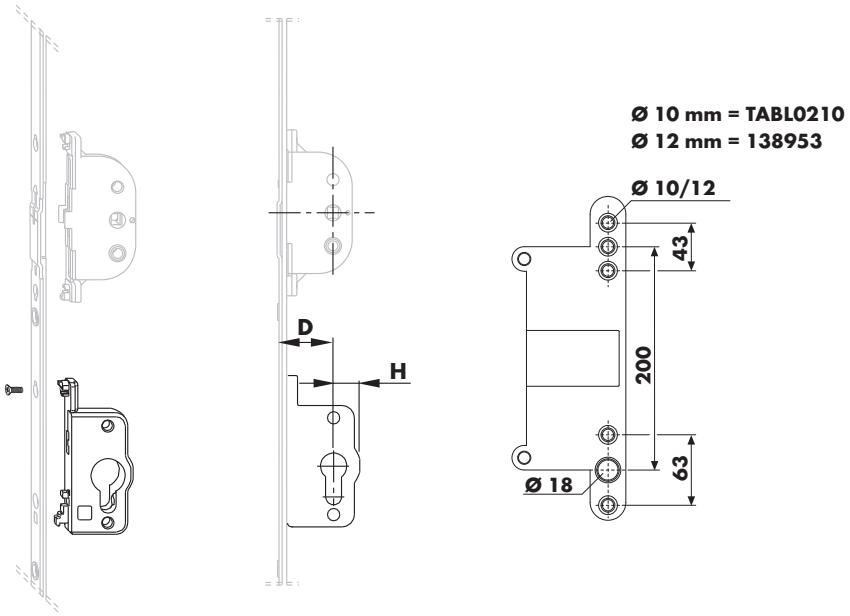


## Sales information

| Description | Part number | Surface | Colour | Box quantity |
|---|---|---|---|---|
| gear set PZ22 25 | TMSL2250-10005_ | Titan Silver | without | 50 pcs |
| gear set PZ22 35 | TMSL2350-10005_ | Titan Silver | without | 50 pcs |
| gear set PZ22 40 | TMSL2400-10005_ | Titan Silver | without | 50 pcs |
| gear set PZ22 45 | TMSL2450-10005_ | Titan Silver | without | 50 pcs |
| gear set PZ22 50 | TMSL2500-10005_ | Titan Silver | without | 50 pcs |

| Description | Material | Page |
|---|---|---|
| Drill holes and routing | | 3.6 - 2 |
| Installation information changing DIN orientation of the latches | | 3.6 - 3 |
| door gear DB OR/PZ | TGKT3000, TGKT3010, TGKT3030, TGKT3050, TGKT3060, TGKT3070, TGKT3080 | 3.6 - 4 |
| door gear DB MR/PZ | TGKT3100, TGKT3110, TGKT3120, TGKT3130, TGKT3150, TGKT3160, TGKT3170, TGKT3180 | 3.6 - 6 |
| door gear DB MR/PZ | TGKT3451, TGKT3452 | 3.6 - 9 |
| door gear DB/K MR/PZ | TGKT3410, TGKT3440 | 3.6 - 10 |
| door gear DB OR/RZ | TGKT3230, TGKT3250, TGKT3260, TGKT3270 | 3.6 - 12 |
| door gear DB MR/RZ | TGKT3330, TGKT3350, TGKT3360, TGKT3370, TGKT3380 | 3.6 - 14 |
| door gear DB/G OR/PZ | TGKT6350, TGKT6500 | 3.6 - 16 |
| door gear DB/G OR/PZ | TGKT5250, TGKT5280, TGKT5350, TGKT5400 | 3.6 - 18 |
| sec.sash door gear | TGKT9000 | 3.6 - 20 |

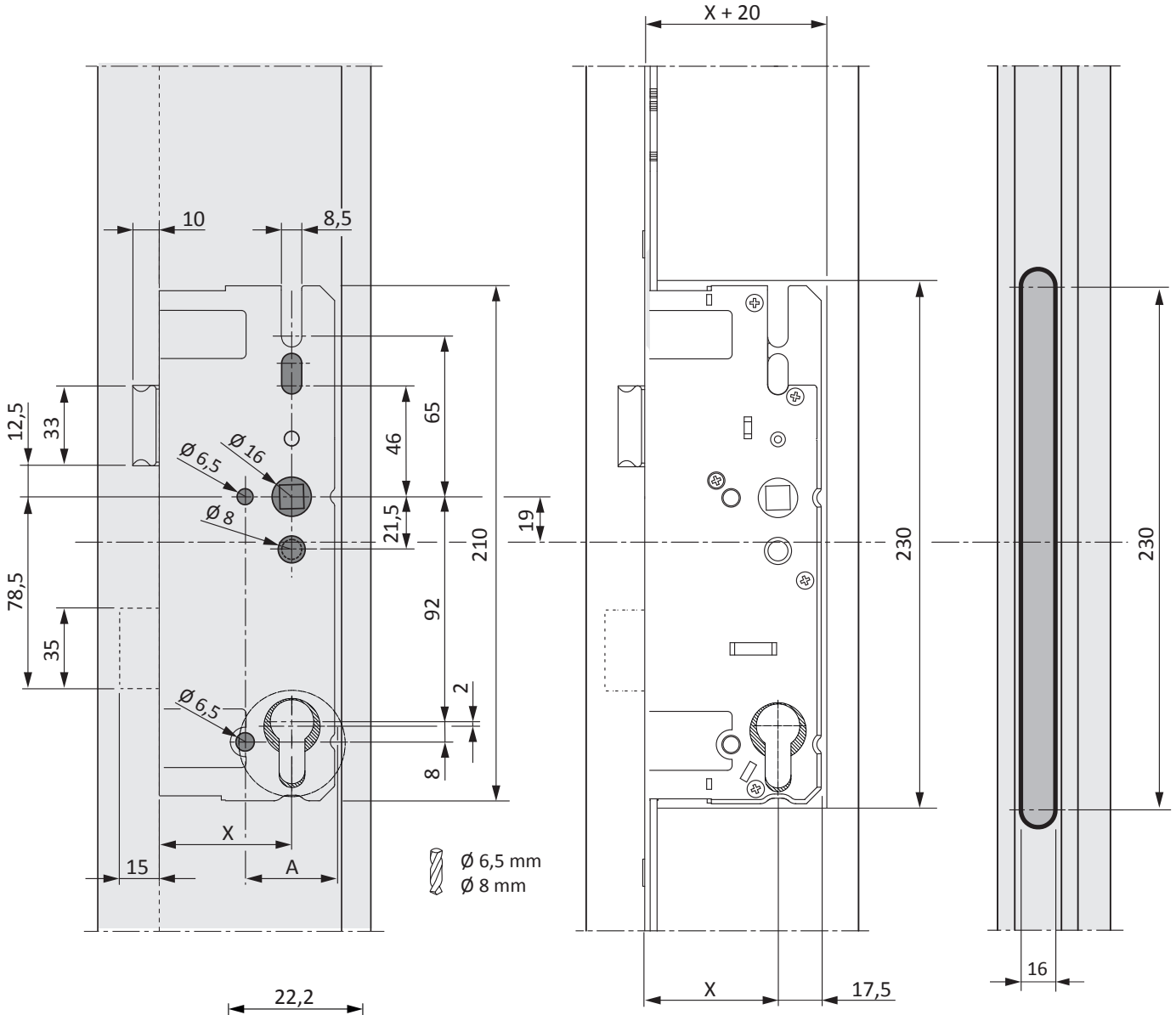


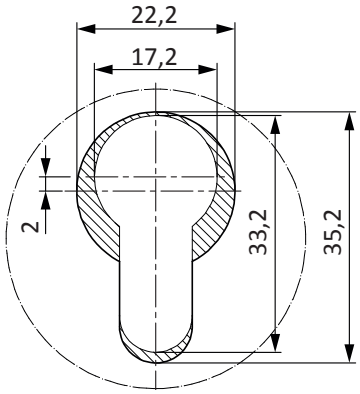


| D<br>Dorn<br>(Backset) | X<br>drilling size | A<br>(Dimension in mm) |
|---|---|---|
| **35** | 34 | 38 |
| **40** | 39 | 38 |
| **40+** | 40 | 38 |
| **45** | 44 | 38 |
| **50** | 49 | 38 |
| **55** | 54 | 38 |

**1.**

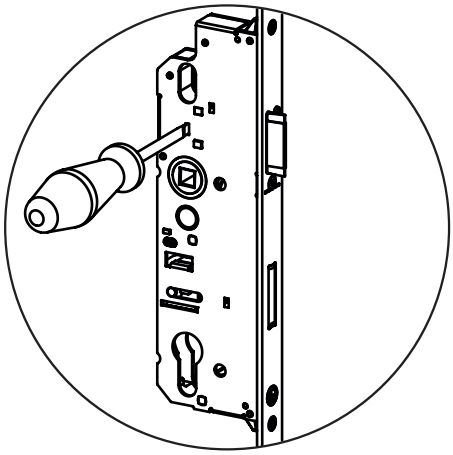

**2.**

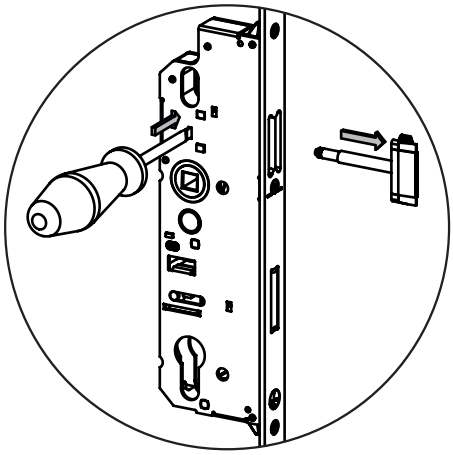

**3.**

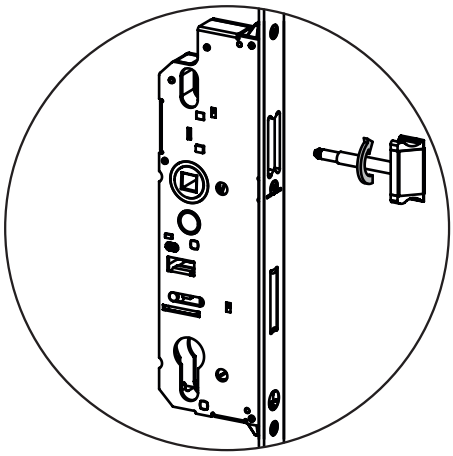

**4.**

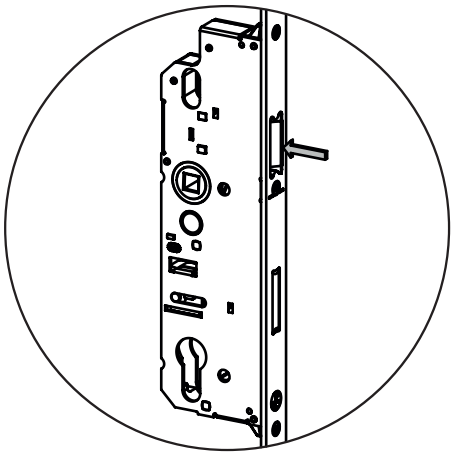

**5.**

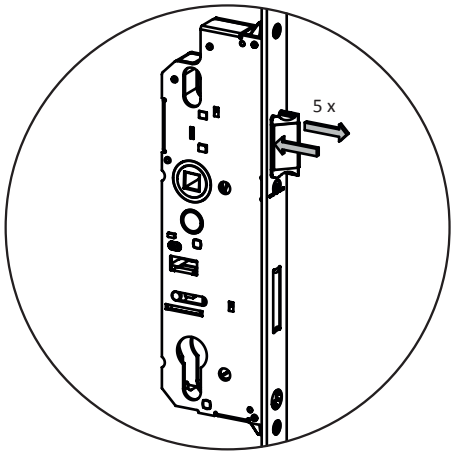


Functional test of the latch:

Press the latch into the gear box several times (approx. 5x).

The latch must be able to extend again independently with ease.

1.0 x 5.5

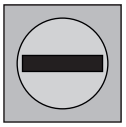

## Technical information

| Part number | Description | Dimensions (mm) | | | | | | |
|---|---|---|---|---|---|---|---|---|
| | | A | B | C | D | | | |
| TGKT3000-... | door gear DB 25/92/8 OR/PZ 3RS | 1960 | 460 | 310 | 25 | 4 | 8 | 8 |
| TGKT3010-... | door gear DB 28/92/8 OR/PZ 3RS | 1960 | 460 | 310 | 28 | 4 | 8 | 8 |
| TGKT3030-... | door gear DB 35/92/8 OR/PZ 3RS | 1960 | 460 | 311 | 35 | 4 | 8 | 8 |
| TGKT3050-... | door gear DB 40/92/8 OR/PZ 3RS | 1960 | 460 | 311 | 40 | 4 | 8 | 8 |
| TGKT3060-... | door gear DB 45/92/8 OR/PZ 3RS | 1960 | 460 | 311 | 45 | 4 | 8 | 8 |
| TGKT3070-... | door gear DB 50/92/8 OR/PZ 3RS | 1960 | 460 | 311 | 50 | 4 | 8 | 8 |
| TGKT3080-... | door gear DB 55/92/8 OR/PZ 3RS | 1960 | 460 | 311 | 55 | 4 | 8 | 8 |

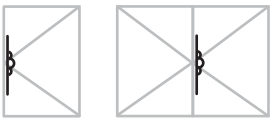

- Lever operated, without locking bolt, with profile cylinder
- * The door gears have a blind toothed system for alternative connecting component and handle height. The alternative cropping areas are clearly marked on the secondary sash.
- Dimension D = backset

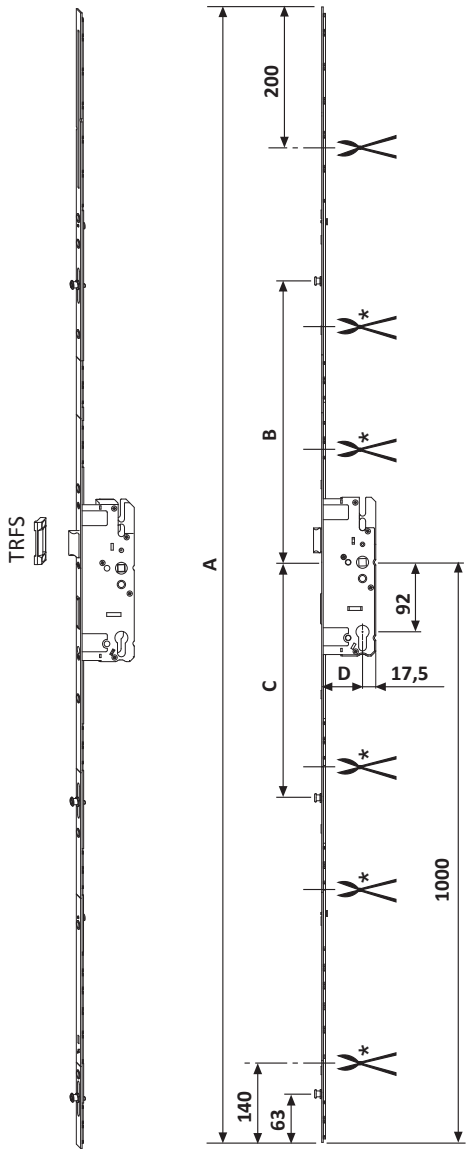

## Sales information

| Description | Part number | Surface | Colour | Box quantity |
|---|---|---|---|---|
| door gear DB 25/92/8 OR/PZ 3RS | TGKT3000-10001_ | Titan Silver | without | 1 pc |
| | TGKT3000-10012_ | Titan Silver | without | 5 pcs |
| door gear DB 28/92/8 OR/PZ 3RS | TGKT3010-10001_ | Titan Silver | without | 1 pc |
| | TGKT3010-10012_ | Titan Silver | without | 5 pcs |
| door gear DB 35/92/8 OR/PZ 3RS | TGKT3030-10001_ | Titan Silver | without | 1 pc |
| | TGKT3030-10012_ | Titan Silver | without | 5 pcs |
| door gear DB 40/92/8 OR/PZ 3RS | TGKT3050-10001_ | Titan Silver | without | 1 pc |
| | TGKT3050-10012_ | Titan Silver | without | 5 pcs |
| door gear DB 45/92/8 OR/PZ 3RS | TGKT3060-10001_ | Titan Silver | without | 1 pc |
| | TGKT3060-10012_ | Titan Silver | without | 5 pcs |
| door gear DB 50/92/8 OR/PZ 3RS | TGKT3070-10001_ | Titan Silver | without | 1 pc |
| | TGKT3070-10012_ | Titan Silver | without | 5 pcs |
| door gear DB 55/92/8 OR/PZ 3RS | TGKT3080-10001_ | Titan Silver | without | 1 pc |
| | TGKT3080-10012_ | Titan Silver | without | 5 pcs |

## Technical details

- Handle operation:
  1. Close
  2. Open

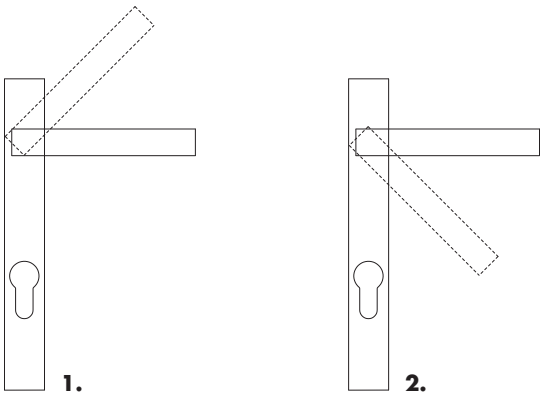

## Technical information

| Part number | Description | Dimensions (mm) | | | | | | |
|---|---|---|---|---|---|---|---|---|
| | | A | B | C | D | | | |
| TGKT3100-... | door gear DB 25/92/8 MR/PZ 3RS | 1960 | 460 | 310 | 25 | 5 | 8 | 8 |
| TGKT3110-... | door gear DB 28/92/8 MR/PZ 3RS | 1960 | 460 | 310 | 28 | 5 | 8 | 8 |
| TGKT3120-... | door gear DB 30/92/8 MR/PZ 3RS | 1960 | 460 | 310 | 30 | 5 | 8 | 8 |
| TGKT3130-... | door gear DB 35/92/8 MR/PZ 3RS | 1960 | 460 | 311 | 35 | 5 | 8 | 8 |
| TGKT3150-... | door gear DB 40/92/8 MR/PZ 3RS | 1960 | 460 | 311 | 40 | 5 | 8 | 8 |
| TGKT3160-... | door gear DB 45/92/8 MR/PZ 3RS | 1960 | 460 | 311 | 45 | 5 | 8 | 8 |
| TGKT3170-... | door gear DB 50/92/8 MR/PZ 3RS | 1960 | 460 | 311 | 50 | 5 | 8 | 8 |
| TGKT3180-... | door gear DB 55/92/8 MR/PZ 3RS | 1960 | 460 | 311 | 55 | 5 | 8 | 8 |

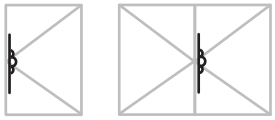

- Lever operated, with locking bolt and profile cylinder
- * The door gears have a blind toothed system for alternative connecting component and handle height. The alternative cropping areas are clearly marked on the secondary sash.
- Dimension D = backset

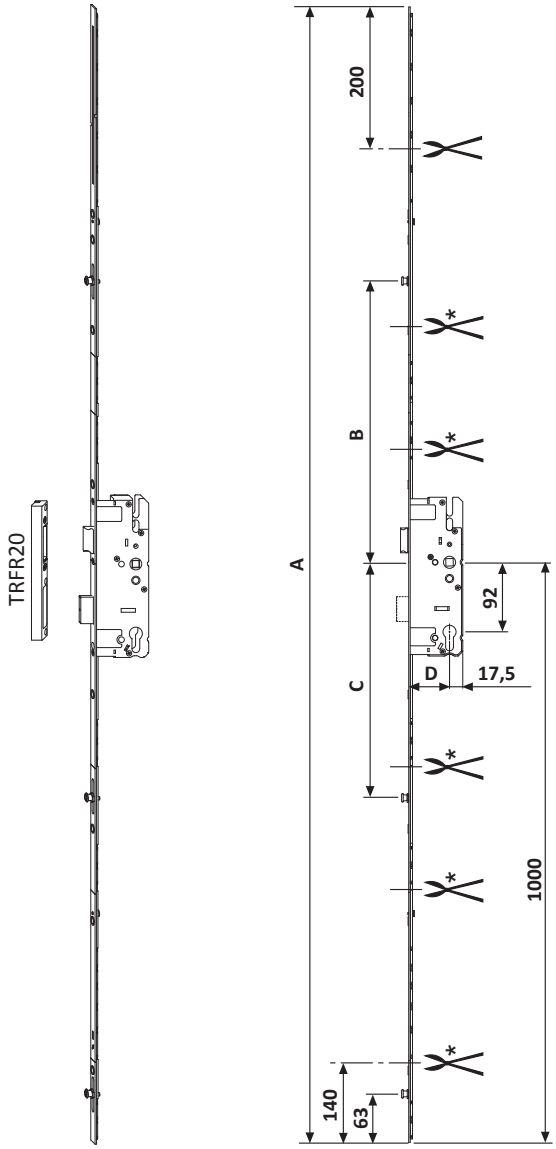

## Sales information

| Description | Part number | Surface | Colour | Box quantity |
|---|---|---|---|---|
| door gear DB 25/92/8 MR/PZ 3RS | TGKT3100-10001_ | Titan Silver | without | 1 pc |
| | TGKT3100-10012_ | Titan Silver | without | 5 pcs |
| door gear DB 28/92/8 MR/PZ 3RS | TGKT3110-10001_ | Titan Silver | without | 1 pc |
| | TGKT3110-10012_ | Titan Silver | without | 5 pcs |
| door gear DB 30/92/8 MR/PZ 3RS | TGKT3120-10001_ | Titan Silver | without | 1 pc |
| | TGKT3120-10012_ | Titan Silver | without | 5 pcs |
| door gear DB 35/92/8 MR/PZ 3RS | TGKT3130-10001_ | Titan Silver | without | 1 pc |
| | TGKT3130-10012_ | Titan Silver | without | 5 pcs |
| | TGKT3130-10087_ | Titan Silver | without | 87 |
| door gear DB 40/92/8 MR/PZ 3RS | TGKT3150-10001_ | Titan Silver | without | 1 pc |
| | TGKT3150-10012_ | Titan Silver | without | 5 pcs |
| | TGKT3150-10087_ | Titan Silver | without | 87 |
| door gear DB 45/92/8 MR/PZ 3RS | TGKT3160-10001_ | Titan Silver | without | 1 pc |
| | TGKT3160-10012_ | Titan Silver | without | 5 pcs |
| | TGKT3160-10087_ | Titan Silver | without | 87 |
| door gear DB 50/92/8 MR/PZ 3RS | TGKT3170-10001_ | Titan Silver | without | 1 pc |
| | TGKT3170-10012_ | Titan Silver | without | 5 pcs |
| door gear DB 55/92/8 MR/PZ 3RS | TGKT3180-10001_ | Titan Silver | without | 1 pc |
| | TGKT3180-10012_ | Titan Silver | without | 5 pcs |

## Technical details

- Handle operation:
  1. Close
  2. Open

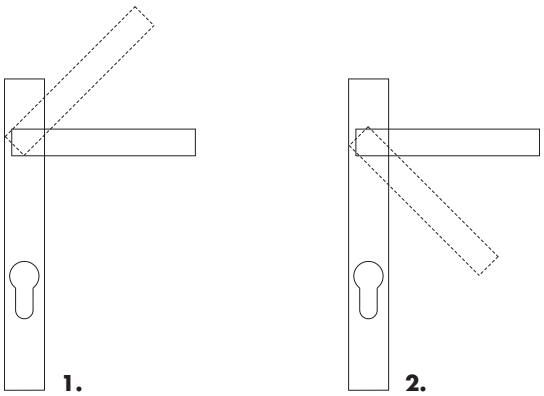

## Technical information

| Part number | Description | Dimensions (mm) | | | | | | |
|---|---|---|---|---|---|---|---|---|
| | | A | B | C | D | | | |
| TGKT3451-... | door gear DB40+/92/8 MR/PZ 3RS rh. | 1960 | 460 | 311 | 40 | 5 | 8 | 8 |
| TGKT3452-... | door gear DB40+/92/8 MR/PZ 3RS lh. | 1960 | 460 | 311 | 40 | 5 | 8 | 8 |

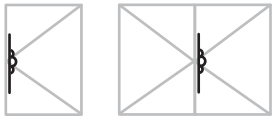

- Lever operated, with locking bolt and profile cylinder
- * The door gears have a blind toothed system for alternative connecting component and handle height. The alternative cropping areas are clearly marked on the secondary sash.
- Dimension D = backset

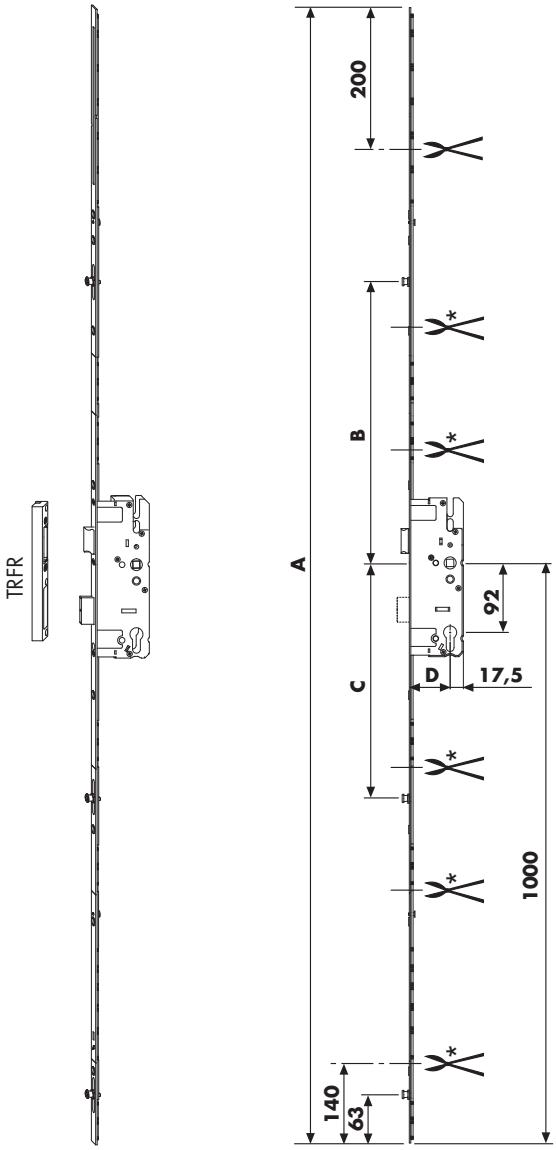

## Sales information

| Description | Part number | Surface | Colour | Box quantity |
|---|---|---|---|---|
| door gear DB40+/92/8 MR/PZ 3RS rh. | TGKT3451-10001_ | Titan Silver | without | 1 pc |
| | TGKT3451-10012_ | Titan Silver | without | 5 pcs |
| door gear DB40+/92/8 MR/PZ 3RS lh. | TGKT3452-10001_ | Titan Silver | without | 1 pc |
| | TGKT3452-10012_ | Titan Silver | without | 5 pcs |

## Technical details

- Handle operation:
  1. Close
  2. Open

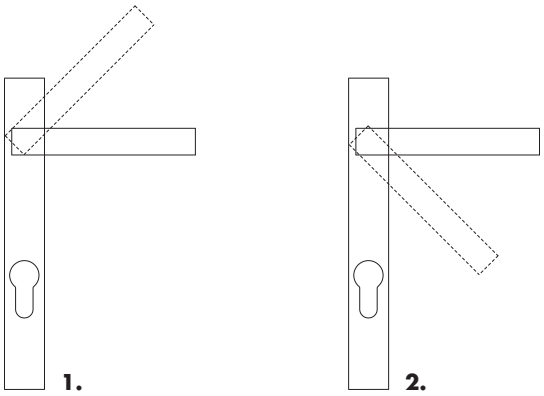

## Technical information

| Part number | Description | Dimensions (mm) | | | | | | |
|---|---|---|---|---|---|---|---|---|
| | | A | B | C | D | | | |
| TGKT3410-... | door gr.DB/K 35/92/8 MR/PZ 2RS | 1820 | 460 | 311 | 35 | 4 | 7 | 8 |
| TGKT3440-... | door gr.DB/K 50/92/8 MR/PZ 2RS | 1820 | 460 | 311 | 50 | 4 | 7 | 8 |

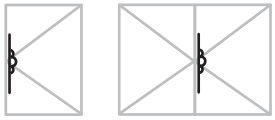

- Lever operated, with locking bolt and profile cylinder
- * The door gears have a blind toothed system for alternative connecting component and handle height. The alternative cropping areas are clearly marked on the secondary sash.
- Dimension D = backset

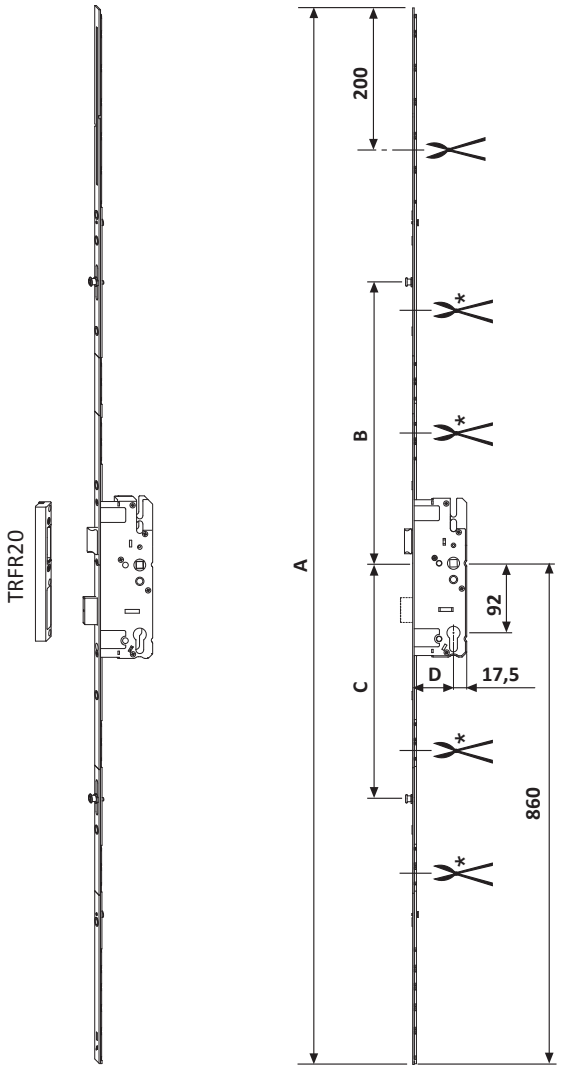

## Sales information

| Description | Part number | Surface | Colour | Box quantity |
|---|---|---|---|---|
| door gr.DB/K 35/92/8 MR/PZ 2RS | TGKT3410-10001_ | Titan Silver | without | 1 pc |
| | TGKT3410-10012_ | Titan Silver | without | 5 pcs |
| door gr.DB/K 50/92/8 MR/PZ 2RS | TGKT3440-10001_ | Titan Silver | without | 1 pc |
| | TGKT3440-10012_ | Titan Silver | without | 5 pcs |

## Technical details

- Handle operation:
  1. Close
  2. Open

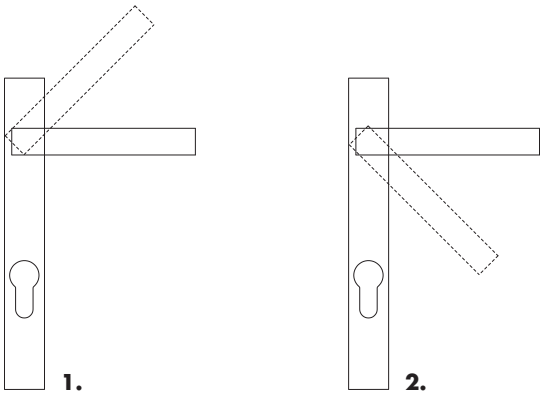

## Technical information

| Part number | Description | Dimensions (mm) | | | | | | |
|---|---|---|---|---|---|---|---|---|
| | | A | B | C | D | | | |
| TGKT3250-... | door gear DB 40/94/8 OR/PZ 3RS | 1960 | 460 | 311 | 40 | 4 | 8 | 8 |
| TGKT3260-... | door gear DB 45/94/8 OR/PZ 3RS | 1960 | 460 | 311 | 45 | 4 | 8 | 8 |
| TGKT3270-... | door gear DB 50/94/8 OR/PZ 3RS | 1960 | 460 | 311 | 50 | 4 | 8 | 8 |

- Lever operated, without locking bolt, with round cylinder
- * The door gears have a blind toothed system for alternative connecting component and handle height. The alternative cropping areas are clearly marked on the secondary sash.
- Dimension D = backset

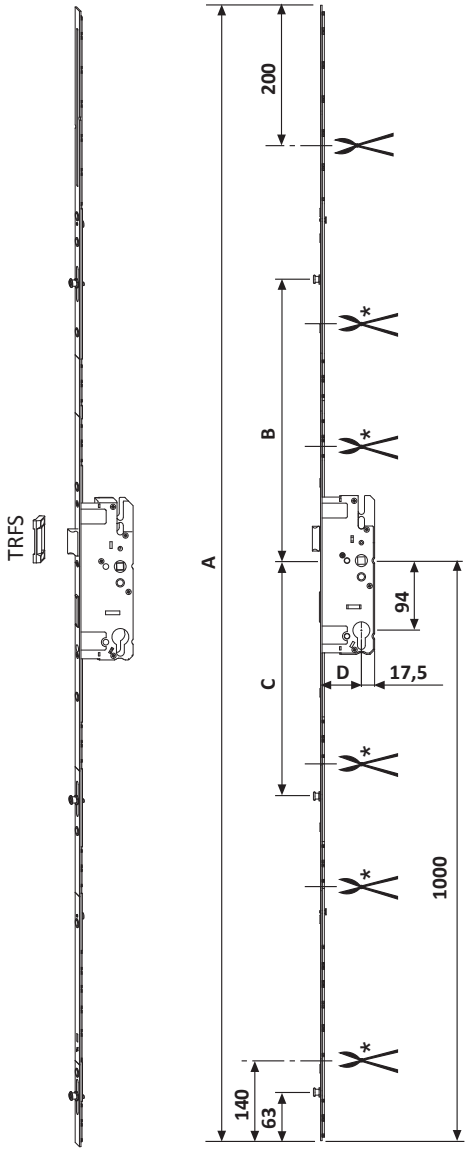

## Sales information

| Description | Part number | Surface | Colour | Box quantity |
|---|---|---|---|---|
| door gear DB 40/94/8 OR/PZ 3RS | TGKT3250-10001_ | Titan Silver | without | 1 pc |
| | TGKT3250-10012_ | Titan Silver | without | 5 pcs |
| door gear DB 45/94/8 OR/PZ 3RS | TGKT3260-10001_ | Titan Silver | without | 1 pc |
| | TGKT3260-10012_ | Titan Silver | without | 5 pcs |
| door gear DB 50/94/8 OR/PZ 3RS | TGKT3270-10001_ | Titan Silver | without | 1 pc |
| | TGKT3270-10012_ | Titan Silver | without | 5 pcs |

## Technical details

- Handle operation:
  1. Close
  2. Open

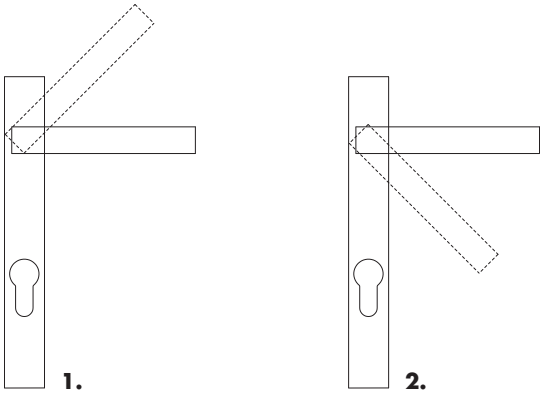

## Technical information

| Part number | Description | Dimensions (mm) | | | | | | |
|---|---|---|---|---|---|---|---|---|
| | | A | B | C | D | | | |
| TGKT3330-... | door gear DB 25/94/8 MR/PZ 3RS | 1960 | 460 | 311 | 35 | 5 | 8 | 8 |
| TGKT3350-... | door gear DB 40/94/8 MR/PZ 3RS | 1960 | 460 | 311 | 40 | 4 | 8 | 8 |
| TGKT3360-... | door gear DB 45/94/8 MR/PZ 3RS | 1960 | 460 | 311 | 45 | 4 | 8 | 8 |
| TGKT3370-... | door gear DB 50/94/8 MR/PZ 3RS | 1960 | 460 | 311 | 50 | 4 | 8 | 8 |
| TGKT3380-... | door gear DB 55/94/8 MR/PZ 3RS | 1960 | 460 | 311 | 55 | 4 | 8 | 8 |

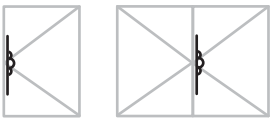

- Lever operated, with locking bolt and round cylinder
- * The door gears have a blind toothed system for alternative connecting component and handle height. The alternative cropping areas are clearly marked on the secondary sash.
- Dimension D = backset

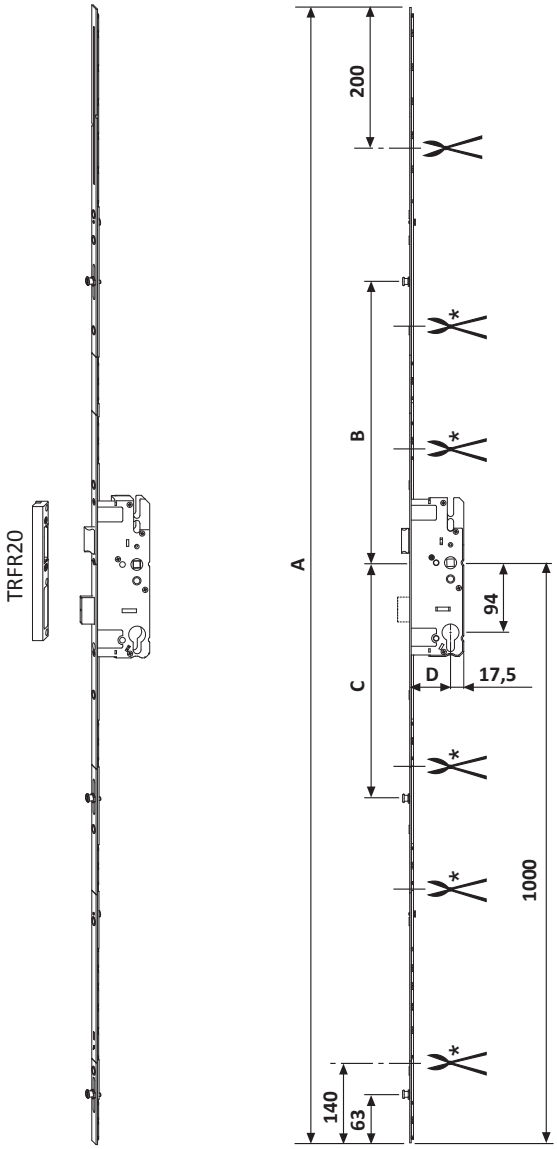

## Sales information

| Description | Part number | Surface | Colour | Box quantity |
|---|---|---|---|---|
| door gear DB 25/94/8 MR/PZ 3RS | TGKT3330-10001_ | Titan Silver | without | 1 pc |
| | TGKT3330-10012_ | Titan Silver | without | 5 pcs |
| door gear DB 40/94/8 MR/PZ 3RS | TGKT3350-10001_ | Titan Silver | without | 1 pc |
| | TGKT3350-10012_ | Titan Silver | without | 5 pcs |
| door gear DB 45/94/8 MR/PZ 3RS | TGKT3360-10001_ | Titan Silver | without | 1 pc |
| | TGKT3360-10012_ | Titan Silver | without | 5 pcs |
| door gear DB 50/94/8 MR/PZ 3RS | TGKT3370-10001_ | Titan Silver | without | 1 pc |
| | TGKT3370-10012_ | Titan Silver | without | 5 pcs |
| door gear DB 55/94/8 MR/PZ 3RS | TGKT3380-10001_ | Titan Silver | without | 1 pc |
| | TGKT3380-10012_ | Titan Silver | without | 5 pcs |

## Technical details

- Handle operation:
  1. Close
  2. Open

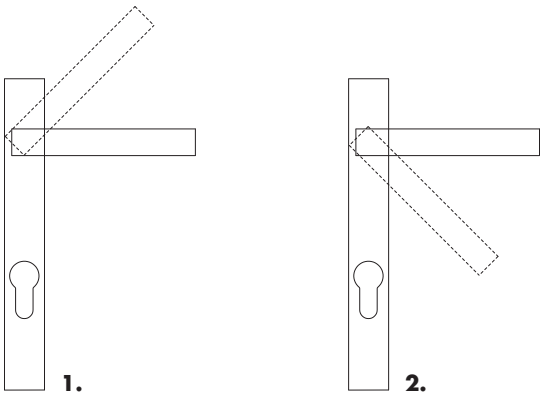

## Technical information

| Part number | Description | Dimensions (mm) | | | | | | |
|---|---|---|---|---|---|---|---|---|
| | | A | B | C | D | | | |
| TGKT6350-... | door gr.DB/G 35/92/8 OR/PZ 2RS | 1960 | 460 | 311 | 35 | 4 | 9 | 8 |
| TGKT6500-... | door gr.DB/G 50/92/8 OR/PZ 2RS | 1960 | 460 | 311 | 50 | 4 | 9 | 8 |

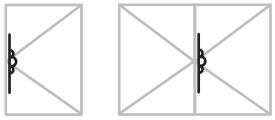

- Reverse-action
- Lever operated, without locking bolt, with profile cylinder

- * The door gears have a blind toothed system for alternative connecting component and handle height. The alternative cropping areas are clearly marked on the secondary sash.
- Dimension D = backset

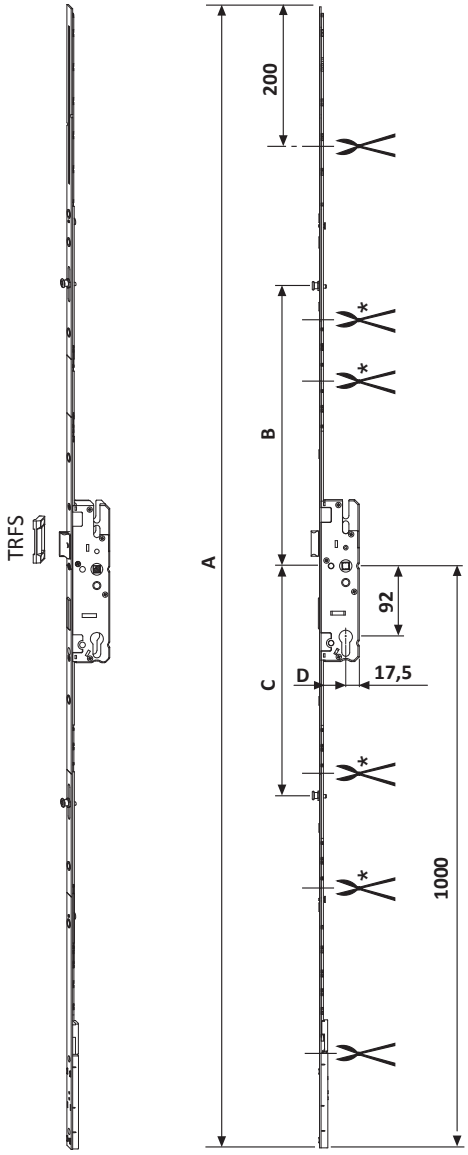

## Sales information

| Description | Part number | Surface | Colour | Box quantity |
|---|---|---|---|---|
| door gr.DB/G 35/92/8 OR/PZ 2RS | TGKT6350-10001_ | Titan Silver | without | 1 pc |
| | TGKT6350-10012_ | Titan Silver | without | 5 pcs |
| door gr.DB/G 50/92/8 OR/PZ 2RS | TGKT6500-10001_ | Titan Silver | without | 1 pc |
| | TGKT6500-10012_ | Titan Silver | without | 5 pcs |

## Technical details

- Handle operation:
  1. Close
  2. Open

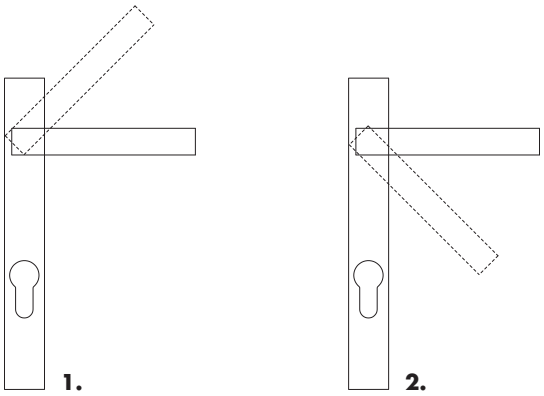

## Technical information

| Part number | Description | Dimensions (mm) | | | | | | |
|---|---|---|---|---|---|---|---|---|
| | | A | B | C | D | | | |
| TGKT5250-... | door gr.DB/G 25/70/7 OR/PZ 2RS | 1820 | 460 | 311 | 25 | 3 | 7 | 7 |
| TGKT5280-... | door gr.DB/G 28/70/7 OR/PZ 2RS | 1820 | 460 | 311 | 28 | 3 | 7 | 7 |
| TGKT5350-... | door gr.DB/G 35/70/7 OR/PZ 2RS | 1820 | 460 | 311 | 35 | 3 | 7 | 7 |
| TGKT5400-... | door gr.DB/G 40/70/7 OR/PZ 2RS | 1820 | 460 | 311 | 40 | 3 | 7 | 7 |

- Reverse-action
- Lever operated, without locking bolt, with profile cylinder
- * The door gears have a blind toothed system for alternative connecting component and handle height. The alternative cropping areas are clearly marked on the secondary sash.
- Dimension D = backset

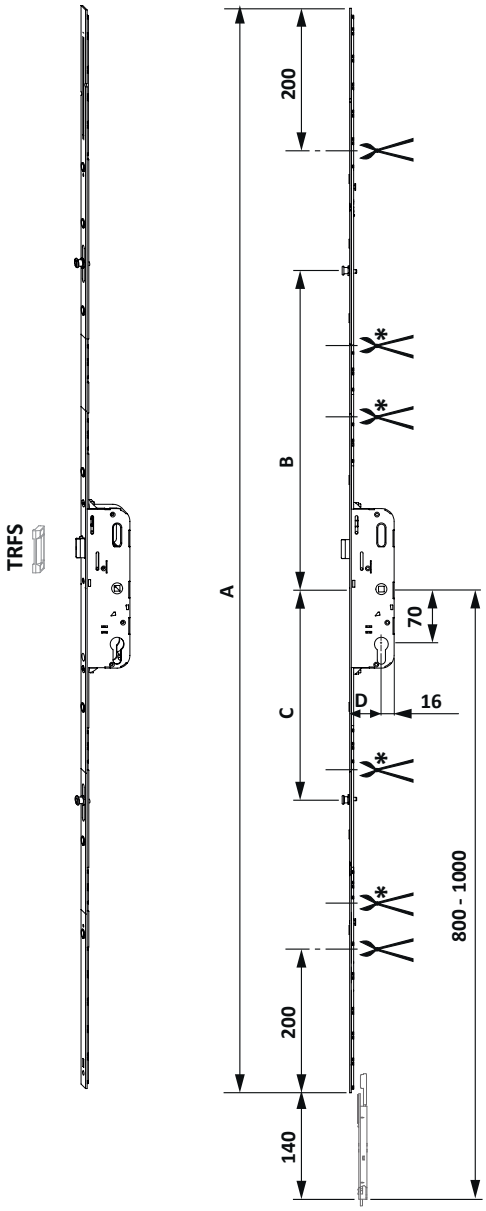

## Sales information

| Description | Part number | Surface | Colour | Box quantity |
|---|---|---|---|---|
| door gr.DB/G 25/70/7 OR/PZ 2RS | TGKT5250-10001_ | Titan Silver | without | 1 pc |
| | TGKT5250-10012_ | Titan Silver | without | 5 pcs |
| door gr.DB/G 28/70/7 OR/PZ 2RS | TGKT5280-10001_ | Titan Silver | without | 1 pc |
| | TGKT5280-10012_ | Titan Silver | without | 5 pcs |
| door gr.DB/G 35/70/7 OR/PZ 2RS | TGKT5350-10001_ | Titan Silver | without | 1 pc |
| | TGKT5350-10012_ | Titan Silver | without | 5 pcs |
| door gr.DB/G 40/70/7 OR/PZ 2RS | TGKT5400-10001_ | Titan Silver | without | 1 pc |
| | TGKT5400-10012_ | Titan Silver | without | 5 pcs |

## Technical details

- Handle operation:
  1. Close
  2. Open

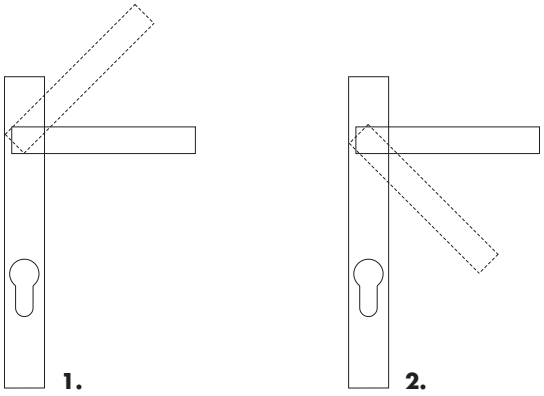

## Technical information

| Part number | Description | Dimensions (mm) | | | |
|---|---|---|---|---|---|
| | | A | X | | |
| TGKT9000-... | sec.sash door gear SB-RS | 1820 | 1140 | 0 | 7 |

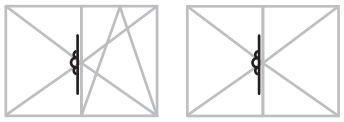

- Use in slave sashes with opposing fitting groove
- * The door gears have a blind toothed system for alternative connecting component and handle height. The alternative cropping areas are clearly marked on the secondary sash.
- Order striker S-RS A0767 additionally

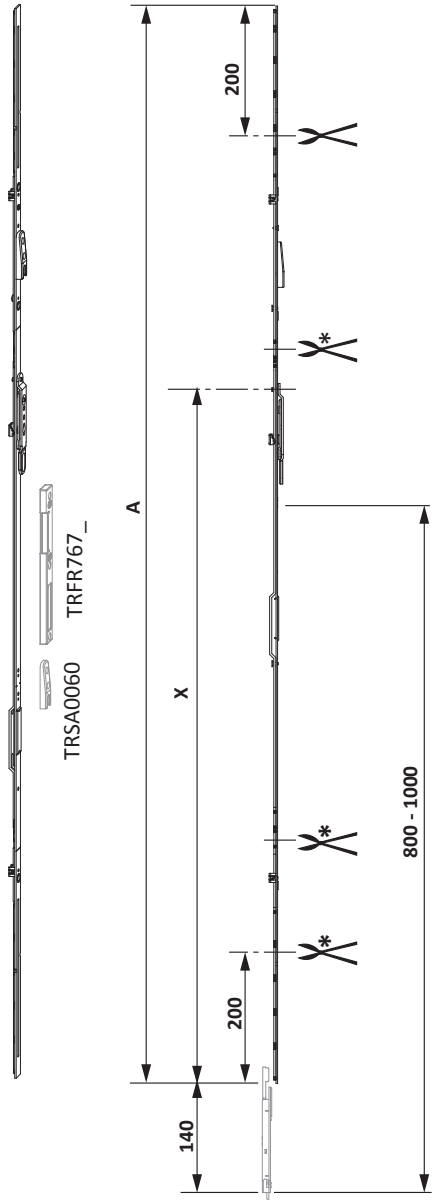

## Sales information

| Description | Part number | Surface | Colour | Box quantity |
|---|---|---|---|---|
| sec.sash door gear SB-RS | TGKT9000-10001_ | Titan Silver | without | 1 pc |
| | TGKT9000-10012_ | Titan Silver | without | 5 pcs |

| Description | Material | Page |
|---|---|---|
| Drill holes and routing gear 15 | | 3.7 - 3 |
| gear 15 AF/DF GK | TGKD3510, TGKD3520, TGKD3530, TGKD3540, TGKD3550, TGKD3560, TGKD3570, TGKD3580, TGKD3590, TGKD3600, TGKD3610 | 3.7 - 4 |
| gear 15 AF/DF GM | TGMD3010, TGMD3020, TGMD3030, TGMD3040, TGMD3050, TGMD3060, TGMD3070, TGMD3080, TGMD3090, TGMD3100, TGMD3110 | 3.7 - 6 |
| gear 15 DF | AGMD1150 | 3.7 - 8 |
| Drill holes and routing gear DF 8 | | 3.7 - 9 |
| Application matrix:<br>gear DF 8, handle height constant | | 3.7 - 10 |
| Application matrix:<br>gear DF 8, handle height centre/variable | | 3.7 - 12 |
| gear DF 8 | TGWD1010, TGWD1050, TGWD1020, TGWD1030, TGWD1040 | 3.7 - 14 |
| gear DF 8 | TGKD1060, TGKD1070, TGKD1080, TGKD1090, TGKD1100, TGKD1110 | 3.7 - 16 |
| extension DF | TVNL1010, TVNL1060, TVNL1020, TVNL1030, TVNL1040, TVNL1050 | 3.7 - 18 |
| Drill holes and routing gear DG -4,5 | | 3.7 - 20 |
| Application matrix:<br>gear DG -4,5, handle height constant | | 3.7 - 21 |
| gear DG -4,5 | TGKG0020, TGKG0030, TGKG0040, TGKG0050, TGKG0060, TGKG0070, TGKG0080 | 3.7 - 23 |
| Application matrix:<br>gear DG -4,5, handle height centre/variable | | 3.7 - 25 |
| gear DG -4,5 | TGMG0010 | 3.7 - 27 |
| locking bolt VSO/A DG | TESC0160, TESC0340, TESC0350, TESC0360, TESC0370, TESC0380 | 3.7 - 28 |
| linkage DG | TZKG0110, TZKG0120, TZKG0130 | 3.7 - 30 |

| Description | Material | Page |
|---|---|---|
| Drill holes and routing gear DG 7 | | 3.7 - 30 |
| gear DG 7 | TGKG1220, TGKG1030, TGKG1230, TGKG1040, TGKG1050, TGKG1240, TGKG1060, TGKG1070, TGKG1080, TGKG1090, TGKG1100, TGKG1110, TGKG1120, TGKG1130, TGKG1140, TGKG1150, TGKG1160, TGKG1170, TGKG1180, TGKG1190, TGKG1200, TGKG1210 | 3.7 - 32 |
| Application matrix:<br>gear 7 AF/DG, handle height constant | | 3.7 - 34 |
| gear 7 AF/DG | TGKG1620, TGKG1630, TGKG1640, TGKG1650, TGKG1660, TGKG1670, TGKG1680, TGKG1690, TGKG1700, TGKG1710, TGKG1720, TGKG1730, TGKG1740, TGKG1750, TGKG1760, TGKG1770, TGKG1780, TGKG1790, TGKG1800, TGKG1810, TGKG1820 | 3.7 - 36 |

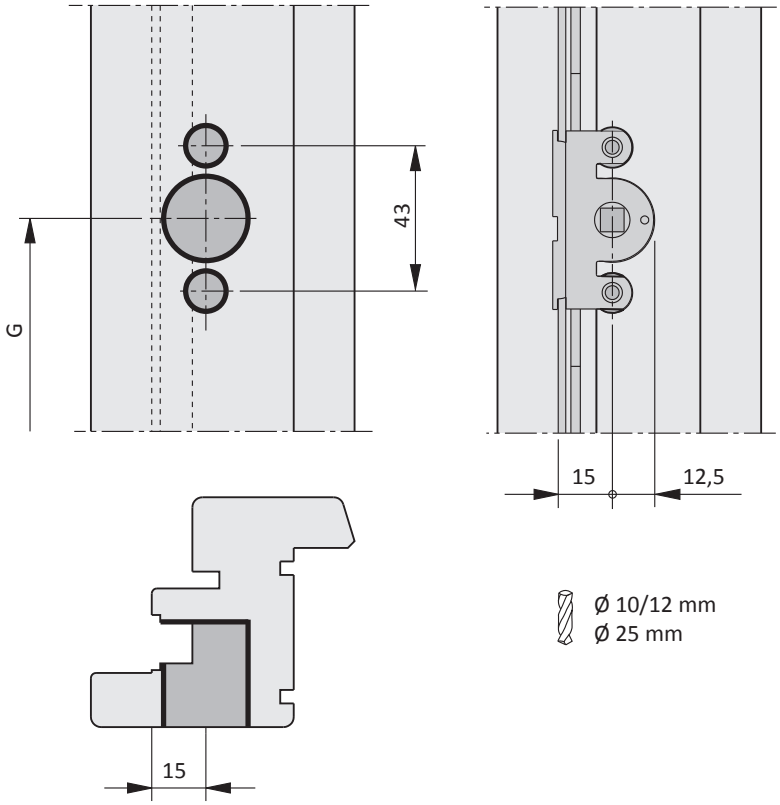
43
G
15
12,5
15
Ø 10/12 mm
Ø 25 mm

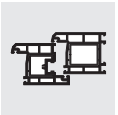

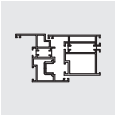

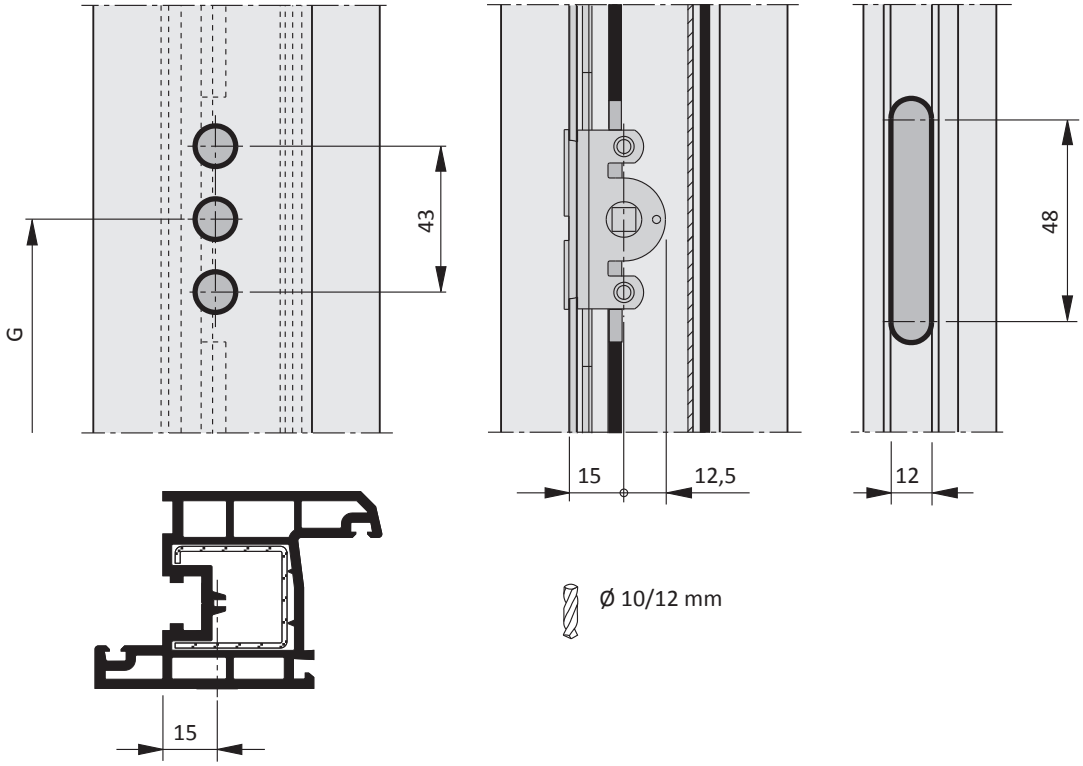
43
G
48
15
12,5
12
Ø 10/12 mm
15

## Technical information

| Part number | Description | FFH | Dimensions (mm) | | | | | | | |
|---|---|---|---|---|---|---|---|---|---|---|
| | | | G1 | A | B | C | D | E | | |
| TGKD3510-... | gear 15 AF/DF sz 30/G180 1RS | 320 - 430 | 180 | 430 | 261 | - | - | - | 1 | 3 |
| TGKD3520-... | gear 15 AF/DF sz 40/G180 2RS | 431 - 600 | 180 | 600 | 336 | - | - | - | 2 | 6 |
| TGKD3530-... | gear 15 AF/DF sz 60/G300 2RS | 601 - 800 | 300 | 800 | 536 | - | - | - | 2 | 7 |
| TGKD3540-... | gear 15 AF/DF sz 80/G400 2RS | 801 - 1000 | 400 | 1000 | 736 | - | - | - | 2 | 7 |
| TGKD3550-... | gear 15 AF/DF sz 100/G500 3RS | 1001 - 1200 | 500 | 1200 | 936 | 580 | - | - | 3 | 9 |
| TGKD3560-... | gear 15 AF/DF sz 120/G600 3RS | 1201 - 1400 | 600 | 1400 | 1147 | 680 | - | - | 3 | 10 |
| TGKD3570-... | gear 15 AF/DF sz 140/G700 4RS | 1401 - 1600 | 700 | 1600 | 1347 | 936 | 466 | - | 4 | 10 |
| TGKD3580-... | gear 15 AF/DF sz 160/G700 4RS | 1601 - 1800 | 700 | 1800 | 1547 | 1136 | 466 | - | 4 | 11 |
| TGKD3590-... | gear 15 AF/DF sz 180/G1000 4RS | 1801 - 2000 | 1000 | 2000 | 1736 | 1266 | 666 | - | 4 | 13 |
| TGKD3600-... | gear 15 AF/DF sz 200/G1000 4RS | 2001 - 2200 | 1000 | 2200 | 1936 | 1266 | 666 | - | 4 | 14 |
| TGKD3610-... | gear 15 AF/DF sz 220/G1000 5RS | 2201 - 2400 | 1000 | 2400 | 2136 | 1701 | 666 | 1266 | 5 | 14 |

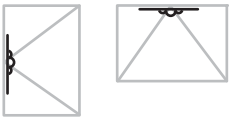

- For basic security
- Backset 15 mm
- Handle height constant

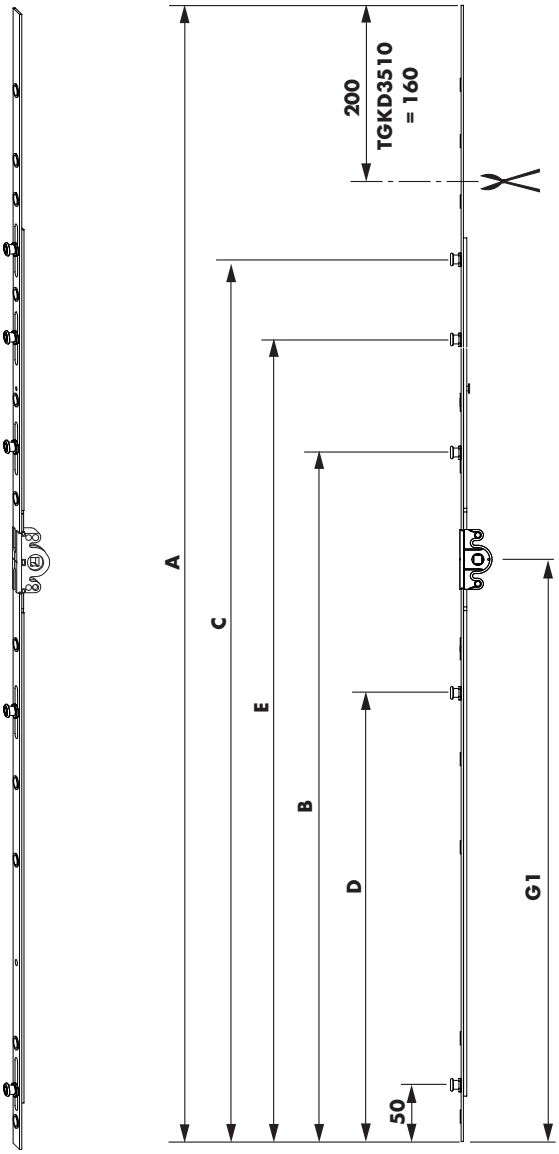

## Sales information

| Description | Part number | Surface | Colour | Box quantity |
|---|---|---|---|---|
| gear 15 AF/DF sz 30/G180 1RS | TGKD3510-10001_ | Titan Silver | without | 1 pc |
| | TGKD3510-10004_ | Titan Silver | without | 25 pcs |
| gear 15 AF/DF sz 40/G180 2RS | TGKD3520-10001_ | Titan Silver | without | 1 pc |
| | TGKD3520-10004_ | Titan Silver | without | 25 pcs |
| gear 15 AF/DF sz 60/G300 2RS | TGKD3530-10001_ | Titan Silver | without | 1 pc |
| | TGKD3530-10004_ | Titan Silver | without | 25 pcs |
| gear 15 AF/DF sz 80/G400 2RS | TGKD3540-10001_ | Titan Silver | without | 1 pc |
| | TGKD3540-10004_ | Titan Silver | without | 25 pcs |
| gear 15 AF/DF sz 100/G500 3RS | TGKD3550-10001_ | Titan Silver | without | 1 pc |
| | TGKD3550-10004_ | Titan Silver | without | 25 pcs |
| gear 15 AF/DF sz 120/G600 3RS | TGKD3560-10001_ | Titan Silver | without | 1 pc |
| | TGKD3560-10004_ | Titan Silver | without | 25 pcs |
| gear 15 AF/DF sz 140/G700 4RS | TGKD3570-10001_ | Titan Silver | without | 1 pc |
| | TGKD3570-10004_ | Titan Silver | without | 25 pcs |
| gear 15 AF/DF sz 160/G700 4RS | TGKD3580-10001_ | Titan Silver | without | 1 pc |
| | TGKD3580-10002_ | Titan Silver | without | 10 pcs |
| gear 15 AF/DF sz 180/G1000 4RS | TGKD3590-10001_ | Titan Silver | without | 1 pc |
| | TGKD3590-10002_ | Titan Silver | without | 10 pcs |
| gear 15 AF/DF sz 200/G1000 4RS | TGKD3600-10001_ | Titan Silver | without | 1 pc |
| | TGKD3600-10002_ | Titan Silver | without | 10 pcs |
| gear 15 AF/DF sz 220/G1000 5RS | TGKD3610-10001_ | Titan Silver | without | 1 pc |
| | TGKD3610-10002_ | Titan Silver | without | 10 pcs |

## Technical information

| Part number | Description | FFH | Dimensions (mm) | | | | | | | |
|---|---|---|---|---|---|---|---|---|---|---|
| | | | G2 | A | B | C | D | E | | |
| TGMD3010-... | gear 15 AF/DF sz 20 1RS | 230 - 430 | 145 - 215 | 430 | 76 | - | - | - | 1 | 3 |
| TGMD3020-... | gear 15 AF/DF sz 40 2RS | 431 - 600 | 215 - 300 | 600 | 84 | 100 | - | - | 2 | 4 |
| TGMD3030-... | gear 15 AF/DF sz 60 2RS | 601 - 800 | 300 - 400 | 800 | 184 | 200 | - | - | 2 | 6 |
| TGMD3040-... | gear 15 AF/DF sz 80 2RS | 801 - 1000 | 400 - 500 | 1000 | 284 | 300 | - | - | 2 | 7 |
| TGMD3050-... | gear 15 AF/DF sz 100 3RS | 1001 - 1200 | 500 - 600 | 1200 | 384 | 400 | 80 | - | 3 | 8 |
| TGMD3060-... | gear 15 AF/DF sz 120 3RS | 1201 - 1400 | 600 - 700 | 1400 | 484 | 500 | 80 | - | 3 | 8 |
| TGMD3070-... | gear 15 AF/DF sz 140 3RS | 1401 - 1600 | 700 - 800 | 1600 | 584 | 600 | 80 | - | 3 | 10 |
| TGMD3080-... | gear 15 AF/DF sz 160 4RS | 1601 - 1800 | 800 - 900 | 1800 | 684 | 700 | 80 | 300 | 4 | 10 |
| TGMD3090-... | gear 15 AF/DF sz 180 4RS | 1801 - 2000 | 900 - 1000 | 2000 | 784 | 800 | 296 | 300 | 4 | 11 |
| TGMD3100-... | gear 15 AF/DF sz 200 4RS | 2001 - 2200 | 1000 - 1100 | 2200 | 884 | 900 | 296 | 300 | 4 | 12 |
| TGMD3110-... | gear 15 AF/DF sz 220 4RS | 2201 - 2400 | 1100 - 1200 | 2400 | 984 | 1000 | 296 | 300 | 4 | 13 |

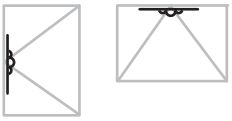

- For basic security
- Backset 15 mm
- Handle height centre/variable

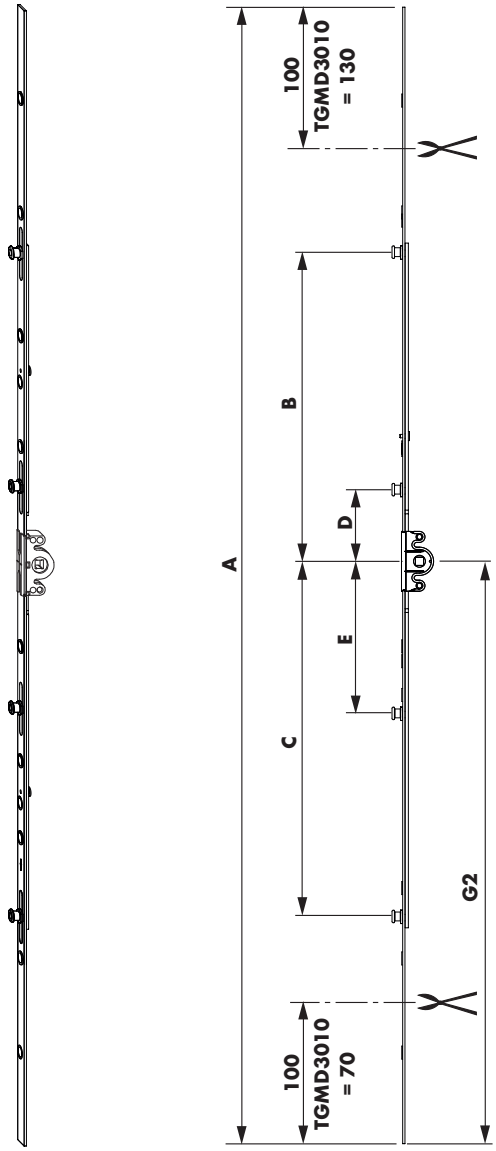

## Sales information

| Description | Part number | Surface | Colour | Box quantity |
|---|---|---|---|---|
| gear 15 AF/DF sz 20 1RS | TGMD3010-10001_ | Titan Silver | without | 1 pc |
| | TGMD3010-10004_ | Titan Silver | without | 25 pcs |
| gear 15 AF/DF sz 40 2RS | TGMD3020-10001_ | Titan Silver | without | 1 pc |
| | TGMD3020-10004_ | Titan Silver | without | 25 pcs |
| gear 15 AF/DF sz 60 2RS | TGMD3030-10001_ | Titan Silver | without | 1 pc |
| | TGMD3030-10004_ | Titan Silver | without | 25 pcs |
| gear 15 AF/DF sz 80 2RS | TGMD3040-10001_ | Titan Silver | without | 1 pc |
| | TGMD3040-10004_ | Titan Silver | without | 25 pcs |
| gear 15 AF/DF sz 100 3RS | TGMD3050-10001_ | Titan Silver | without | 1 pc |
| | TGMD3050-10004_ | Titan Silver | without | 25 pcs |
| gear 15 AF/DF sz 120 3RS | TGMD3060-10001_ | Titan Silver | without | 1 pc |
| | TGMD3060-10004_ | Titan Silver | without | 25 pcs |
| gear 15 AF/DF sz 140 3RS | TGMD3070-10001_ | Titan Silver | without | 1 pc |
| | TGMD3070-10004_ | Titan Silver | without | 25 pcs |
| gear 15 AF/DF sz 160 4RS | TGMD3080-10001_ | Titan Silver | without | 1 pc |
| | TGMD3080-10002_ | Titan Silver | without | 10 pcs |
| gear 15 AF/DF sz 180 4RS | TGMD3090-10001_ | Titan Silver | without | 1 pc |
| | TGMD3090-10002_ | Titan Silver | without | 10 pcs |
| gear 15 AF/DF sz 200 4RS | TGMD3100-10001_ | Titan Silver | without | 1 pc |
| | TGMD3100-10002_ | Titan Silver | without | 10 pcs |
| gear 15 AF/DF sz 220 4RS | TGMD3110-10001_ | Titan Silver | without | 1 pc |
| | TGMD3110-10002_ | Titan Silver | without | 10 pcs |

## Technical information

| Part number | Description | | |
|---|---|---|---|
| AGMD1150-... | gear 15 DF 1RS | 1 | 2 |

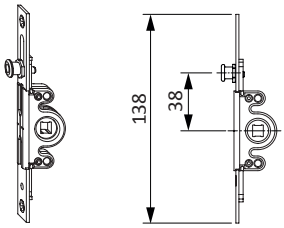




## Sales information

| Description | Part number | Surface | Colour | Box quantity |
|---|---|---|---|---|
| gear 15 DF 1RS | AGMD1150-10001_ | Titan Silver | without | 1 pc |
| | AGMD1150-10004_ | Titan Silver | without | 25 pcs |

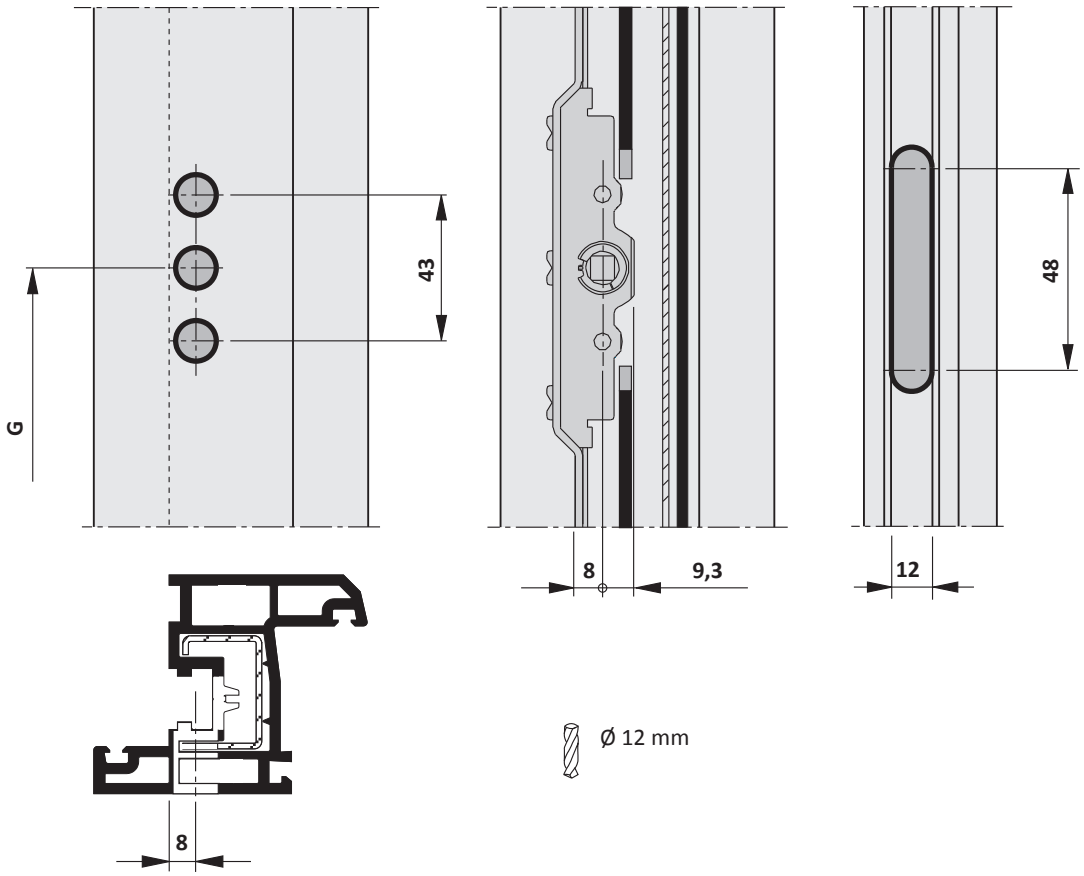
43
G
8
9,3
48
12
8
Ø 12 mm

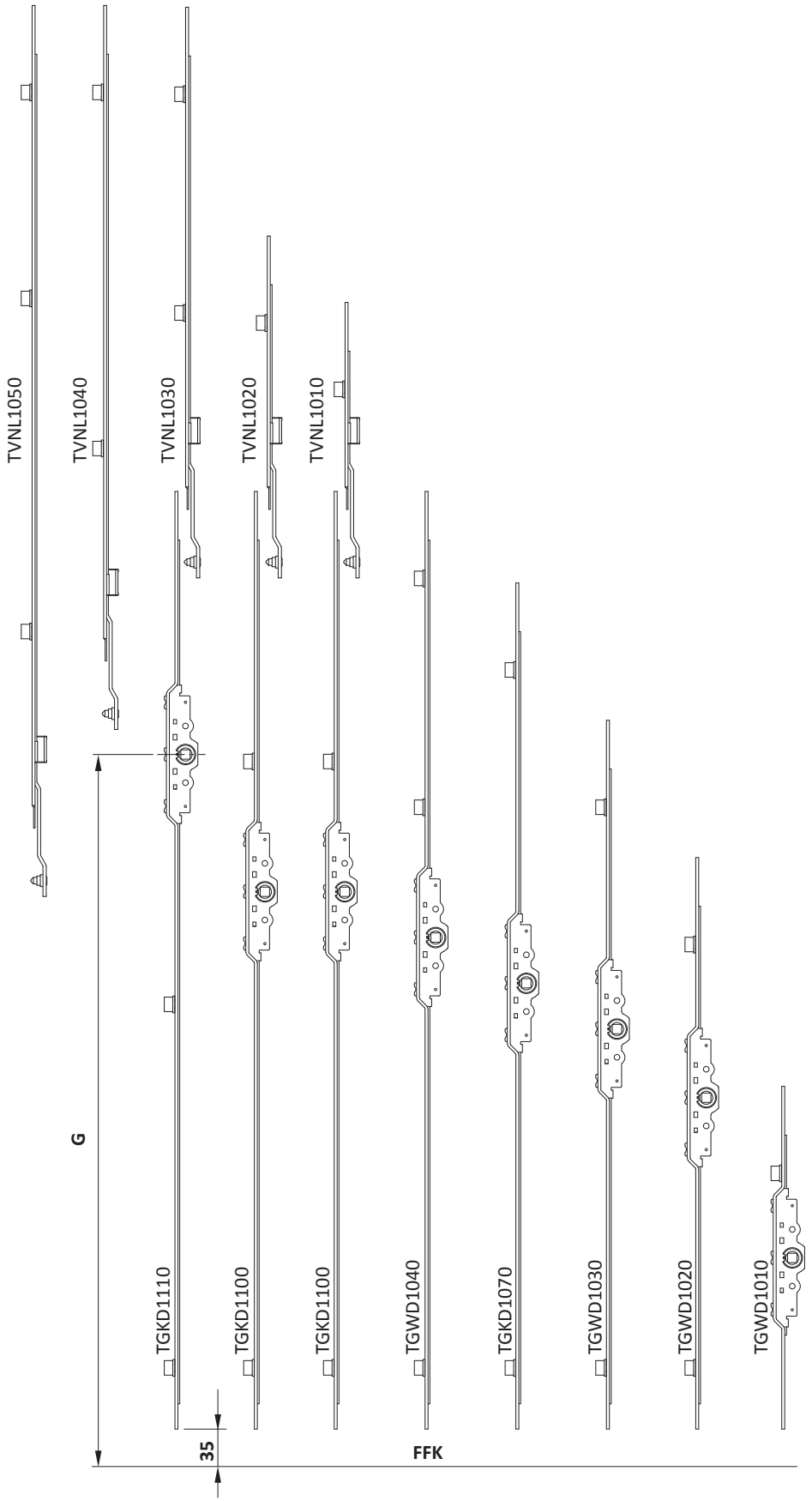
TVNL1050
TVNL1040
TVNL1030
TVNL1020
TVNL1010
G
TGKD1110
TGKD1100
TGKD1100
TGWD1040
TGKD1070
TGWD1030
TGWD1020
TGWD1010
35
FFK

| Material number | Description | Material number | Description | FFH (mm) | G (mm) |
|---|---|---|---|---|---|
| **TGWD1010** | gear DF 8 sz 30/G165 1V | | | 410 - 600 | 165 |
| **TGWD1050** | gear DF 8 sz 50/G180 1V | | | 360 - 600 | 180 |
| **TGWD1020** | gear DF 8 sz 60/G300 2V | | | 601 - 800 | 300 |
| **TGWD1030** | gear DF 8 sz 80/G400 2V | | | 801 - 1000 | 400 |
| **TGKD1060** | gear DF 8 sz 100/G400 2V | | | 1001 - 1200 | 400 |
| **TGKD1070** | gear DF 8 sz 100/G500 2V | | | 1001 - 1200 | 500 |
| **TGKD1080** | gear DF 8 sz 120/G400 3V | | | 1201 - 1400 | 400 |
| **TGKD1090** | gear DF 8 sz 120/G500 3V | | | 1201 - 1400 | 500 |
| **TGWD1040** | gear DF 8 sz 120/G600 3V | | | 1201 - 1400 | 600 |
| **TGKD1100** | gear DF 8 sz 140/G700 2V | **TVNL1010** | extension DF sz 20 1V | 1401 - 1600 | 700 |
| **TGKD1100** | gear DF 8 sz 140/G700 2V | **TVNL1020** | extension DF sz 40 1V | 1601 - 1800 | 700 |
| **TGKD1110** | gear DF 8 sz 180/G1000 2V | **TVNL1030** | extension DF sz 60 2V | 1801 - 2000 | 1000 |
| **TGKD1110** | gear DF 8 sz 180/G1000 2V | **TVNL1040** | extension DF sz 80 2V | 2001 - 2200 | 1000 |
| **TGKD1110** | gear DF 8 sz 180/G1000 2V | **TVNL1050** | extension DF sz 100 3V | 2201 - 2400 | 1000 |

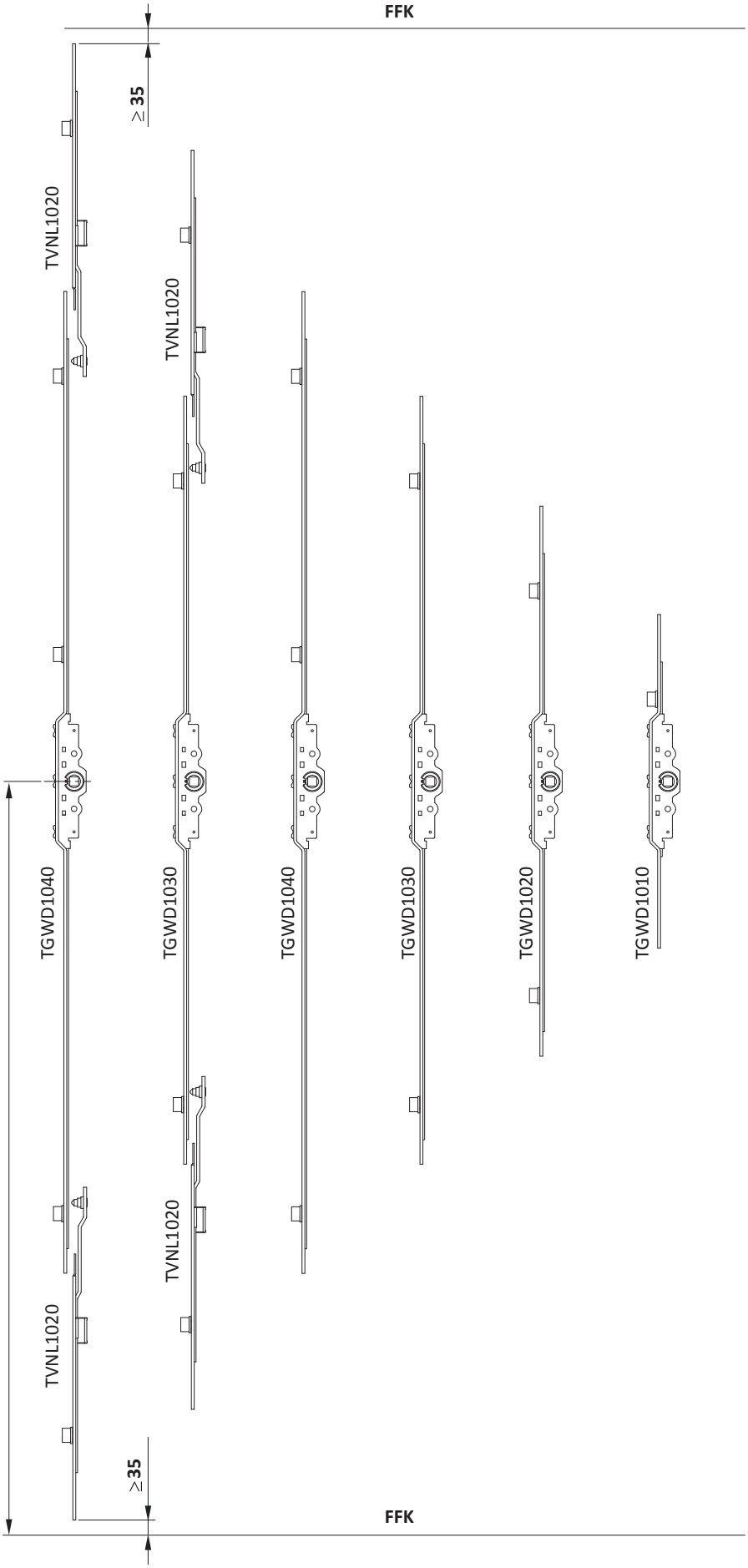
FFK
≥ 35
TVNL1020
TVNL1020
TGWD1040
TGWD1030
TGWD1040
TGWD1030
TGWD1020
TGWD1010
G
TVNL1020
TVNL1020
≥ 35
FFK

| Material number | Description | Material number | Description | FFH (mm) | G (mm) |
|---|---|---|---|---|---|
| **TGWD1010** | gear DF 8 sz 30/G165 1V | | | 330 - 600 | 165 - 300 |
| **TGWD1020** | gear DF 8 sz 60/G300 2V | | | 601 - 800 | 300 - 400 |
| **TGWD1030** | gear DF 8 sz 80/G400 2V | | | 801 - 1200 | 400 - 600 |
| **TGWD1040** | gear DF 8 sz 120/G600 3V | | | 1201 - 1600 | 600 - 800 |
| **TGWD1030** | gear DF 8 sz 80/G400 2V | **TVNL1020** | extension DF sz 40 1V | 1601 - 2000 | 800 - 1000 |
| **TGWD1040** | gear DF 8 sz 120/G600 3V | **TVNL1020** | extension DF sz 40 1V | 2001 - 2400 | 1000 - 1200 |

## Technical information

| Part number | Description | FFH GK | FFH GM | Dimensions (mm) | | | | | | | |
|---|---|---|---|---|---|---|---|---|---|---|---|
| | | | | G1 | G2 | A | B | C | D | | |
| TGWD1010-... | gear DF 8 sz 30/G165 1V | 280 - 360 | 280 - 360 | 165 | 165 - 180 | 260 | - | 66 | - | 1 | 3 |
| TGWD1050-... | gear DF 8 sz 30/G180 2V | 361 - 600 | 361 - 600 | 180 | 180 - 300 | 340 | 124 | 106 | - | 2 | 4 |
| TGWD1020-... | gear DF 8 sz 60/G300 2V | 601 - 800 | 601 - 800 | 300 | 300 - 400 | 530 | 199 | 201 | - | 2 | 5 |
| TGWD1030-... | gear DF 8 sz 80/G400 2V | 801 - 1000 | 801 - 2000 | 400 | 400 - 1000 | 730 | 299 | 301 | - | 2 | 6 |
| TGWD1040-... | gear DF 8 sz 120/G600 3V | 1201 - 1400 | 1201 - 2400 | 600 | 600 - 1200 | 1130 | 499 | 501 | 101 | 3 | 8 |

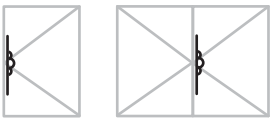

- For basic security
- Suitable for product range TITAN iP and TITAN AF
- Optional handle position
- Installation location 1: handle position constant
  Installation location 2: handle position central

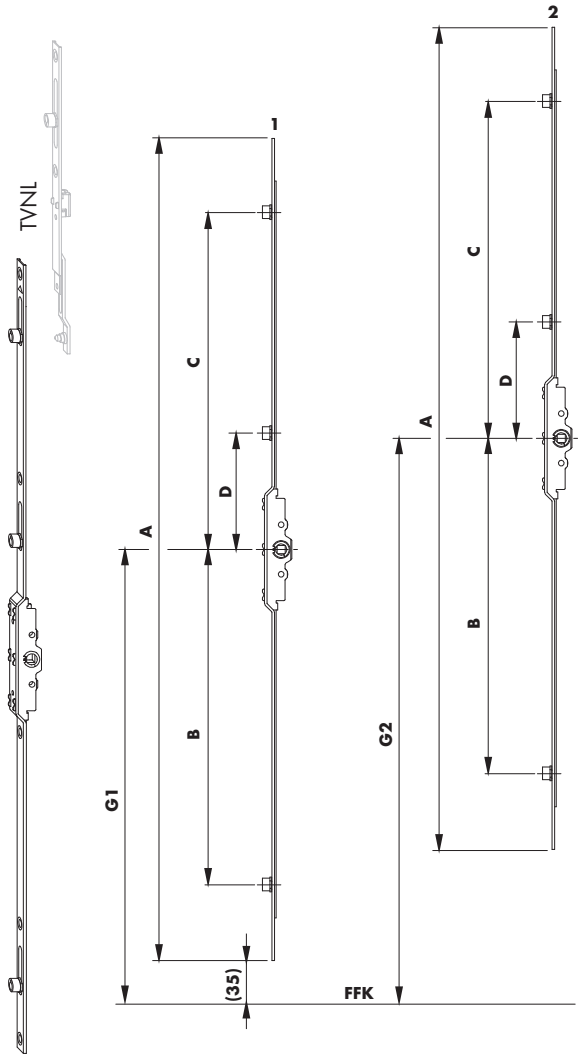

## Sales information

| Description | Part number | Surface | Colour | Box quantity |
|---|---|---|---|---|
| gear DF 8 sz 30/G165 1V | TGWD1010-10001_ | Titan Silver | without | 1 pc |
| | TGWD1010-10004_ | Titan Silver | without | 25 pcs |
| gear DF 8 sz 30/G180 2V | TGWD1050-10001_ | Titan Silver | without | 1 pc |
| | TGWD1050-10004_ | Titan Silver | without | 25 pcs |
| gear DF 8 sz 60/G300 2V | TGWD1020-10001_ | Titan Silver | without | 1 pc |
| | TGWD1020-10004_ | Titan Silver | without | 25 pcs |
| gear DF 8 sz 80/G400 2V | TGWD1030-10001_ | Titan Silver | without | 1 pc |
| | TGWD1030-10004_ | Titan Silver | without | 25 pcs |
| gear DF 8 sz 120/G600 3V | TGWD1040-10001_ | Titan Silver | without | 1 pc |
| | TGWD1040-10004_ | Titan Silver | without | 25 pcs |

## Technical information

| Part number | Description | FFH | Dimensions (mm) | | | | | | |
|---|---|---|---|---|---|---|---|---|---|
| | | | G1 | A | B | C | D | | |
| TGKD1060-... | gear DF 8 sz 100/G400 2V | 1001 - 1200 | 400 | 930 | 299 | 501 | - | 2 | 7 |
| TGKD1070-... | gear DF 8 sz 100/G500 2V | 1001 - 1200 | 500 | 930 | 399 | 401 | - | 2 | 8 |
| TGKD1080-... | gear DF 8 sz 120/G400 3V | 1201 - 1400 | 400 | 1130 | 299 | 701 | 301 | 3 | 9 |
| TGKD1090-... | gear DF 8 sz 120/G500 3V | 1201 - 1400 | 500 | 1130 | 399 | 601 | 201 | 3 | 9 |
| TGKD1100-... | gear DF 8 sz 140/G700 2V | 1401 - 1800 | 700 | 1130 | 599 | 101 | - | 2 | 8 |
| TGKD1110-... | gear DF 8 sz 180/G1000 2V | 1801 - 2400 | 1000 | 1130 | 899 | - | - | 2 | 8 |

- For basic security
- Suitable for product range TITAN iP and TITAN AF
- Handle height constant

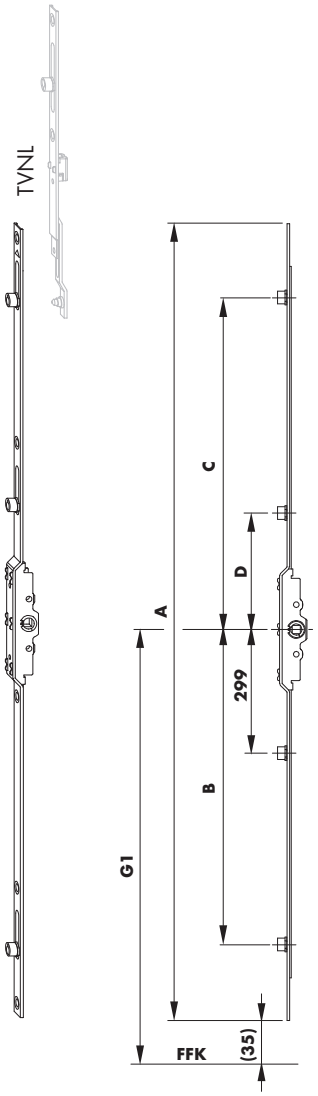

## Sales information

| Description | Part number | Surface | Colour | Box quantity |
|---|---|---|---|---|
| gear DF 8 sz 100/G400 2V | TGKD1060-10001_ | Titan Silver | without | 1 pc |
| | TGKD1060-10004_ | Titan Silver | without | 25 pcs |
| gear DF 8 sz 100/G500 2V | TGKD1070-10001_ | Titan Silver | without | 1 pc |
| | TGKD1070-10004_ | Titan Silver | without | 25 pcs |
| gear DF 8 sz 120/G400 3V | TGKD1080-10001_ | Titan Silver | without | 1 pc |
| | TGKD1080-10004_ | Titan Silver | without | 25 pcs |
| gear DF 8 sz 120/G500 3V | TGKD1090-10001_ | Titan Silver | without | 1 pc |
| | TGKD1090-10004_ | Titan Silver | without | 25 pcs |
| gear DF 8 sz 140/G700 2V | TGKD1100-10001_ | Titan Silver | without | 1 pc |
| | TGKD1100-10004_ | Titan Silver | without | 25 pcs |
| gear DF 8 sz 180/G1000 2V | TGKD1110-10001_ | Titan Silver | without | 1 pc |
| | TGKD1110-10004_ | Titan Silver | without | 25 pcs |

## Technical information

| Part number | Description | Dimensions (mm) | | | | | |
|---|---|---|---|---|---|---|---|
| | | A | B | C | D | | |
| TVNL1010-... | extension DF sz 20 1V | 198 | 134 | - | - | 1 | 2 |
| TVNL1060-... | extension DF S-ES sz 20 1S | 198 | 134 | - | - | 1 | 2 |
| TVNL1020-... | extension DF sz 40 1V | 398 | 334 | - | - | 1 | 3 |
| TVNL1030-... | extension DF sz 60 2V | 598 | 534 | 134 | - | 2 | 5 |
| TVNL1040-... | extension DF sz 80 2V | 798 | 734 | 134 | - | 2 | 5 |
| TVNL1050-... | extension DF sz 100 3V | 998 | 934 | 534 | 134 | 3 | 8 |

- For basic security
- Suitable for product range TITAN iP and TITAN AF

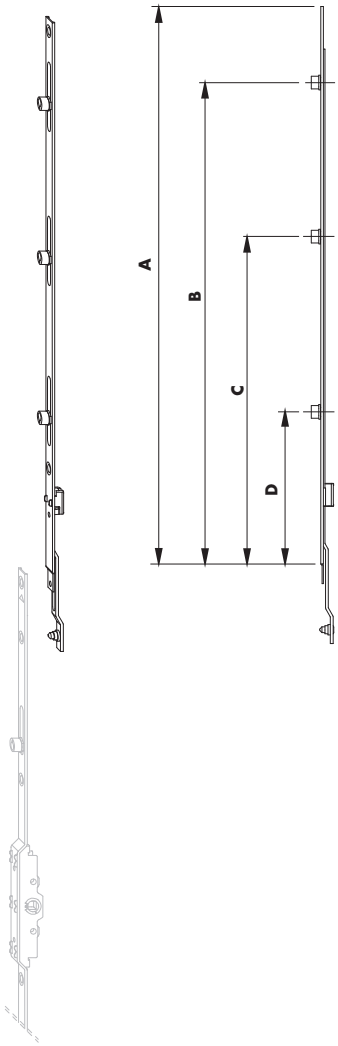

## Sales information

| Description | Part number | Surface | Colour | Box quantity |
|---|---|---|---|---|
| extension DF sz 20 1V | TVNL1010-10001_ | Titan Silver | without | 1 pc |
| | TVNL1010-10004_ | Titan Silver | without | 25 pcs |
| extension DF S-ES sz 20 1S | TVNL1060-10001_ | Titan Silver | without | 1 pc |
| | TVNL1060-10004_ | Titan Silver | without | 25 pcs |
| extension DF sz 40 1V | TVNL1020-10001_ | Titan Silver | without | 1 pc |
| | TVNL1020-10004_ | Titan Silver | without | 25 pcs |
| extension DF sz 60 2V | TVNL1030-10001_ | Titan Silver | without | 1 pc |
| | TVNL1030-10004_ | Titan Silver | without | 25 pcs |
| extension DF sz 80 2V | TVNL1040-10001_ | Titan Silver | without | 1 pc |
| | TVNL1040-10004_ | Titan Silver | without | 25 pcs |
| extension DF sz 100 3V | TVNL1050-10001_ | Titan Silver | without | 1 pc |
| | TVNL1050-10004_ | Titan Silver | without | 25 pcs |

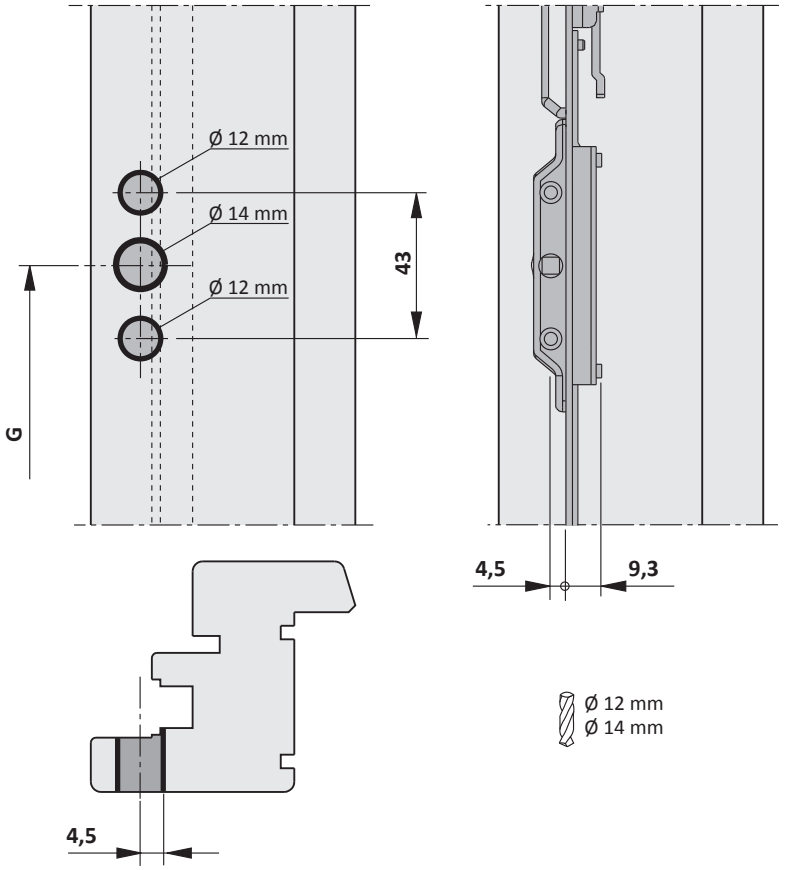
Ø 12 mm
Ø 14 mm
Ø 12 mm
43
G
4,5
9,3
Ø 12 mm
Ø 14 mm
4,5

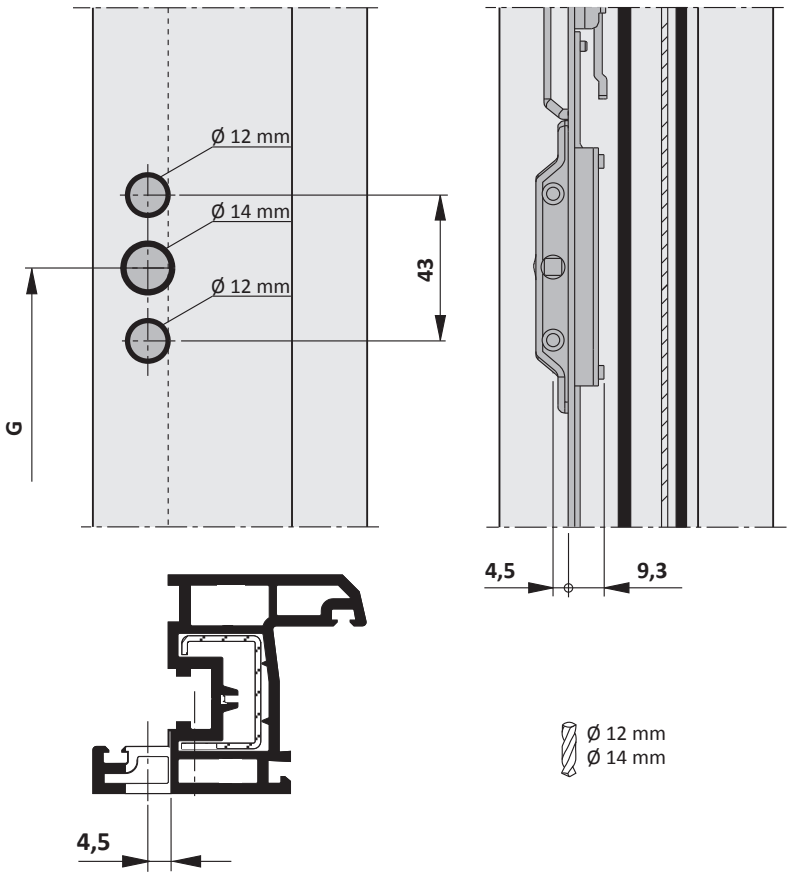
Ø 12 mm
Ø 14 mm
Ø 12 mm
43
G
4,5
9,3
Ø 12 mm
Ø 14 mm
4,5

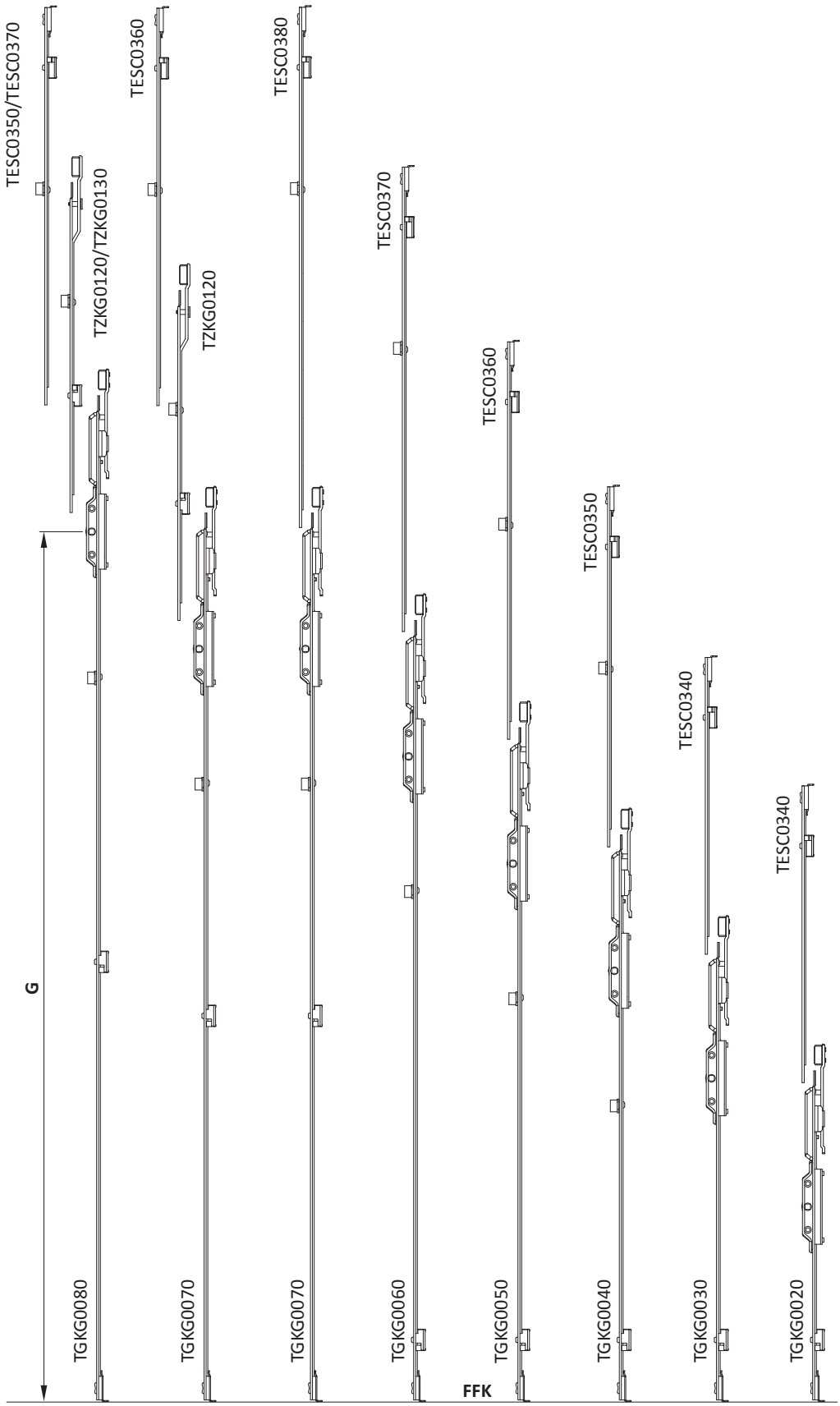
TESC0350/TESC0370
TZKG0120/TZKG0130
TESC0360
TZKG0120
TESC0380
TESC0370
TESC0360
TESC0350
TESC0340
TESC0340
G
TGKG0080
TGKG0070
TGKG0070
TGKG0060
TGKG0050
TGKG0040
TGKG0030
TGKG0020
FFK

# Application matrix for gear DG -4,5

Handle height constant
backset -4,5 mm

**TITAN**

| Material number | Description | Material number | Description | Material number | Description | FFH (mm) | G (mm) |
|---|---|---|---|---|---|---|---|
| **TGKG0020** | gear DG -4,5 sz 50/G180 | **TESC0340** | locking bolt VSO/A DG sz 2 | | | 480 - 600 | 180 |
| **TGKG0030** | gear DG -4,5 sz 60/G300 | **TESC0340** | locking bolt VSO/A DG sz 2 | | | 601 - 800 | 300 |
| **TGKG0040** | gear DG -4,5 sz 80/G400 1V | **TESC0350** | locking bolt VSO/A DG sz 3 1V | | | 801 - 1000 | 400 |
| **TGKG0050** | gear DG -4,5 sz 100/G500 1V | **TESC0360** | locking bolt VSO/A DG sz 4 1V | | | 1001 - 1200 | 500 |
| **TGKG0060** | gear DG -4,5 sz 120/G600 1V | **TESC0370** | locking bolt VSO/A DG sz 5 1V | | | 1201 - 1400 | 600 |
| **TGKG0070** | gear DG -4,5 sz 140/G700 1V | **TESC0380** | locking bolt VSO/A DG sz 6 1V | | | 1401 - 1600 | 700 |
| **TGKG0070** | gear DG -4,5 sz 140/G700 1V | **TESC0360** | locking bolt VSO/A DG sz 4 1V | **TZKG0120** | linkage DG sz 2 1V | 1601 - 1800 | 700 |
| **TGKG0080** | gear DG -4,5 sz 180/G1000 1V | **TESC0350** | locking bolt VSO/A DG sz 3 1V | **TZKG0120** | linkage DG sz 2 1V | 1801 - 2000 | 1000 |
| **TGKG0080** | gear DG -4,5 sz 180/G1000 1V | **TESC0370** | locking bolt VSO/A DG sz 5 1V | **TZKG0120** | linkage DG sz 2 1V | 2001 - 2200 | 1000 |
| **TGKG0080** | gear DG -4,5 sz 180/G1000 1V | **TESC0370** | locking bolt VSO/A DG sz 5 1V | **TZKG0130** | linkage DG sz 3 1V | 2201 - 2400 | 1000 |

## Technical information

| Part number | Description | FFH | Dimensions (mm) | | | | |
|---|---|---|---|---|---|---|---|
| | | | G1 | A | B | | |
| TGKG0020-... | gear DG -4,5 sz 50/G180 | 480 - 680 | 180 | 292 | - | 0 | 3 |
| TGKG0030-... | gear DG -4,5 sz 60/G300 | 601 - 800 | 300 | 412 | - | 0 | 3 |
| TGKG0040-... | gear DG -4,5 sz 80/G400 1V | 801 - 1000 | 400 | 512 | 126 | 1 | 4 |
| TGKG0050-... | gear DG -4,5 sz 100/G500 1V | 1001 - 1200 | 500 | 612 | 126 | 1 | 5 |
| TGKG0060-... | gear DG -4,5 sz 120/G600 1V | 1201 - 1400 | 600 | 712 | 126 | 1 | 5 |
| TGKG0070-... | gear DG -4,5 sz 140/G700 1V | 1401 - 1800 | 700 | 812 | 126 | 1 | 6 |
| TGKG0080-... | gear DG -4,5 sz 180/G1000 1V | 1801 - 2400 | 1000 | 1112 | 326 | 1 | 7 |

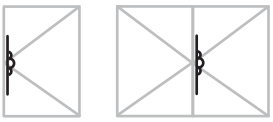

- Backset -4,5 mm
- For basic security
- Reverse-action
- Handle height constant

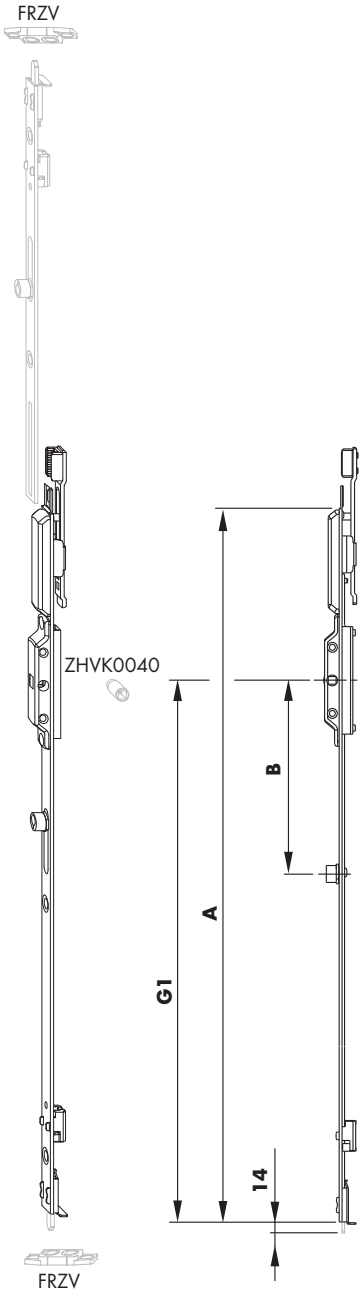

## Sales information

| Description | Part number | Surface | Colour | Box quantity |
|---|---|---|---|---|
| gear DG -4,5 sz 50/G180 | TGKG0020-10001_ | Titan Silver | without | 1 pc |
| | TGKG0020-10004_ | Titan Silver | without | 25 pcs |
| gear DG -4,5 sz 60/G300 | TGKG0030-10001_ | Titan Silver | without | 1 pc |
| | TGKG0030-10004_ | Titan Silver | without | 25 pcs |
| gear DG -4,5 sz 80/G400 1V | TGKG0040-10001_ | Titan Silver | without | 1 pc |
| | TGKG0040-10004_ | Titan Silver | without | 25 pcs |
| gear DG -4,5 sz 100/G500 1V | TGKG0050-10001_ | Titan Silver | without | 1 pc |
| | TGKG0050-10004_ | Titan Silver | without | 25 pcs |
| gear DG -4,5 sz 120/G600 1V | TGKG0060-10001_ | Titan Silver | without | 1 pc |
| | TGKG0060-10004_ | Titan Silver | without | 25 pcs |
| gear DG -4,5 sz 140/G700 1V | TGKG0070-10004_ | Titan Silver | without | 25 pcs |
| gear DG -4,5 sz 180/G1000 1V | TGKG0080-10001_ | Titan Silver | without | 1 pc |
| | TGKG0080-10007_ | Titan Silver | without | 250 pcs |

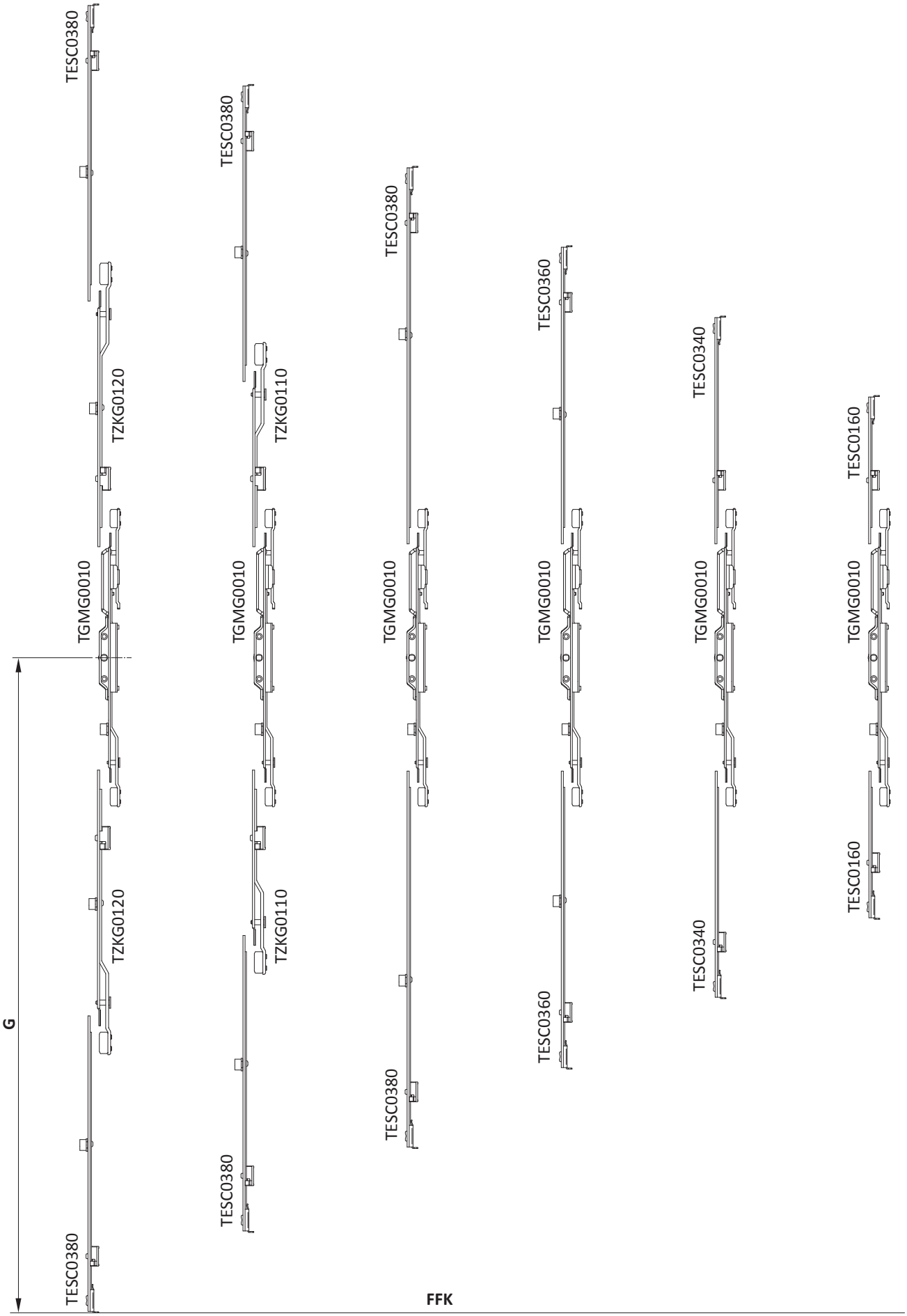
TESC0380
TZKG0120
TGMG0010
TZKG0120
TESC0380
G
TESC0380
TZKG0110
TGMG0010
TZKG0110
TESC0380
TESC0380
TGMG0010
TESC0380
TESC0360
TGMG0010
TESC0360
TESC0340
TGMG0010
TESC0340
TESC0160
TGMG0010
TESC0160
FFK

# Application matrix for gear DG -4,5

Handle height centre/variable backset -4,5 mm

**TITAN**

| Material number | Description | Material number | Description | Material number | Description | FFH (mm) | G (mm) |
|---|---|---|---|---|---|---|---|
| **TGMG0010** | gear DG -4,5 sz 20 1V | **TESC0160** | locking bolt VSO/A DG sz 1 | | | 445 - 815 | 223 - 407 |
| **TGMG0010** | gear DG -4,5 sz 20 1V | **TESC0340** | locking bolt VSO/A DG sz 2 | | | 594 - 993 | 297 - 497 |
| **TGMG0010** | gear DG -4,5 sz 20 1V | **TESC0360** | locking bolt VSO/A DG sz 4 1V | | | 994 - 1393 | 497 - 697 |
| **TGMG0010** | gear DG -4,5 sz 20 1V | **TESC0380** | locking bolt VSO/A DG sz 6 1V | | | 1394 - 1793 | 697 - 897 |
| **TGMG0010** | gear DG -4,5 sz 20 1V | **TESC0380** | locking bolt VSO/A DG sz 6 1V | **TZKG0110** | linkage DG sz 1 | 1794 - 2193 | 897 - 1097 |
| **TGMG0010** | gear DG -4,5 sz 20 1V | **TESC0380** | locking bolt VSO/A DG sz 6 1V | **TZKG0120** | linkage DG sz 2 1V | 2194 - 2400 | 1097 - 1200 |

## Technical information

| Part number | Description | FFH | Dimensions (mm) | | | | |
|---|---|---|---|---|---|---|---|
| | | | G2 | A | B | | |
| TGMG0010-... | gear DG -4,5 sz 20 1V | 445 - 2400 | 223 - 1200 | 224 | 66 | 1 | 2 |

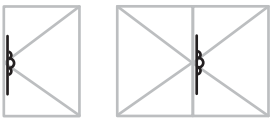

- Backset -4,5 mm
- For basic security
- Reverse-action
- Handle height centre/variable

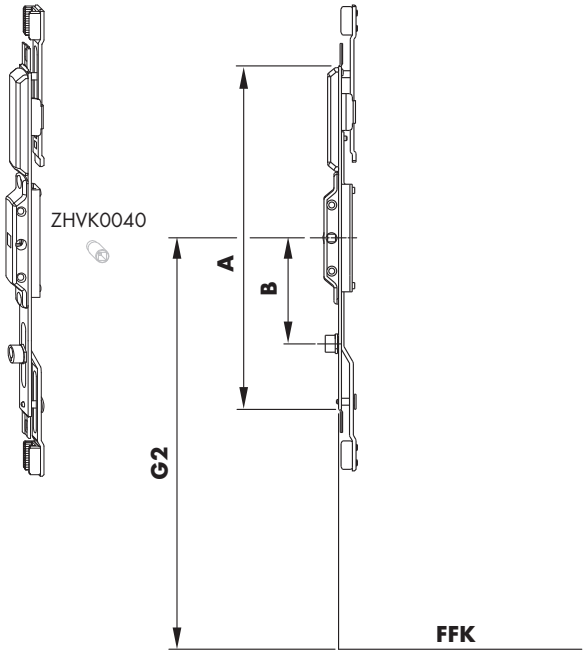


## Sales information

| Description | Part number | Surface | Colour | Box quantity |
|---|---|---|---|---|
| gear DG -4,5 sz 20 1V | TGMG0010-10001_ | Titan Silver | without | 1 pc |
| | TGMG0010-10004_ | Titan Silver | without | 25 pcs |

## Technical information

| Part number | Description | Dimensions (mm) | | | |
|---|---|---|---|---|---|
| | | A | B | | |
| TESC0160-... | locking bolt VSO/A DG sz 1 | 296 | - | 0 | 1 |
| TESC0340-... | locking bolt VSO/A DG sz 2 | 385 | - | 0 | 2 |
| TESC0350-... | locking bolt VSO/A DG sz 3 1V | 485 | 151 | 1 | 2 |
| TESC0360-... | locking bolt VSO/A DG sz 4 1V | 585 | 251 | 1 | 3 |
| TESC0370-... | locking bolt VSO/A DG sz 5 1V | 685 | 351 | 1 | 3 |
| TESC0380-... | locking bolt VSO/A DG sz 6 1V | 785 | 451 | 1 | 4 |

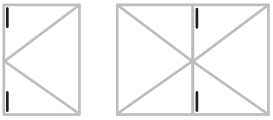

- For basic security
- Note:
  An additional screw is required in addition to the stated required quantity, as a further hole is created during cropping.

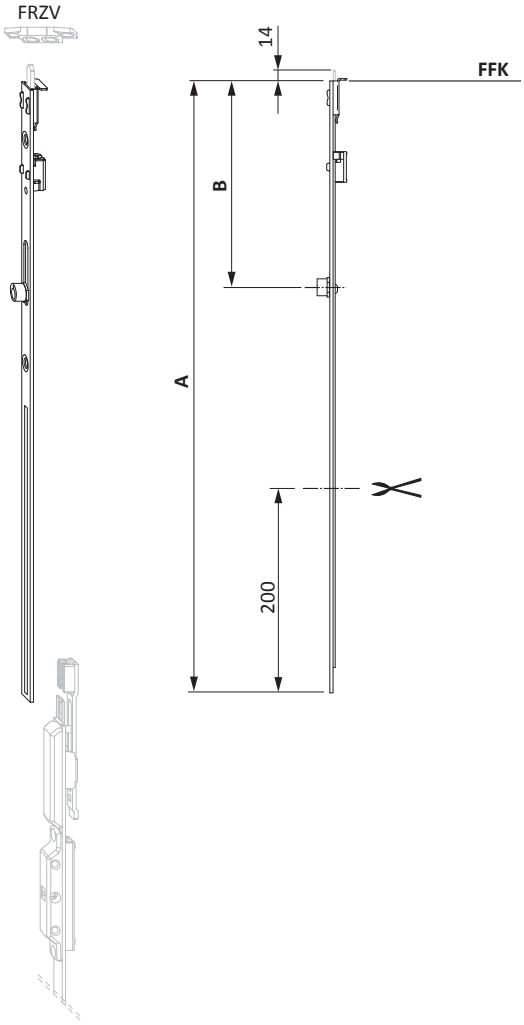

## Sales information

| Description | Part number | Surface | Colour | Box quantity |
|---|---|---|---|---|
| locking bolt VSO/A DG sz 1 | TESC0160-10001_ | Titan Silver | without | 1 pc |
| | TESC0160-10004_ | Titan Silver | without | 25 pcs |
| locking bolt VSO/A DG sz 2 | TESC0340-10001_ | Titan Silver | without | 1 pc |
| | TESC0340-10004_ | Titan Silver | without | 25 pcs |
| locking bolt VSO/A DG sz 3 1V | TESC0350-10001_ | Titan Silver | without | 1 pc |
| | TESC0350-10004_ | Titan Silver | without | 25 pcs |
| locking bolt VSO/A DG sz 4 1V | TESC0360-10001_ | Titan Silver | without | 1 pc |
| | TESC0360-10004_ | Titan Silver | without | 25 pcs |
| locking bolt VSO/A DG sz 5 1V | TESC0370-10001_ | Titan Silver | without | 1 pc |
| | TESC0370-10004_ | Titan Silver | without | 25 pcs |
| locking bolt VSO/A DG sz 6 1V | TESC0380-10001_ | Titan Silver | without | 1 pc |
| | TESC0380-10004_ | Titan Silver | without | 25 pcs |

## Technical information

| Part number | Description | Dimensions (mm) | | | |
|---|---|---|---|---|---|
| | | A | B | | |
| TZKG0110-... | linkage DG sz 1 | 197 | - | 0 | 1 |
| TZKG0120-... | linkage DG sz 2 1V | 397 | 197 | 1 | 3 |
| TZKG0130-... | linkage DG sz 3 1V | 597 | 197 | 1 | 4 |

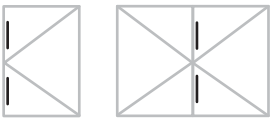

- For basic security

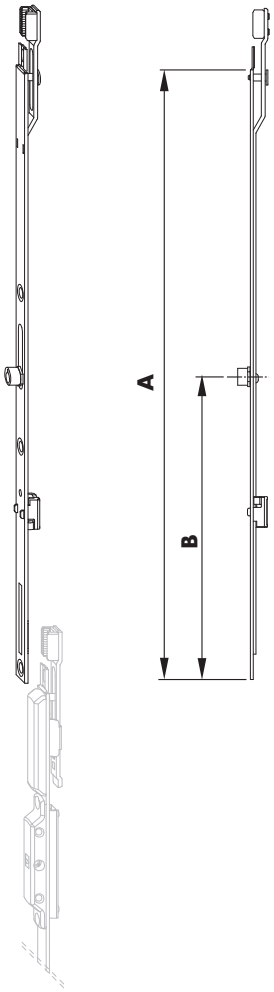


## Sales information

| Description | Part number | Surface | Colour | Box quantity |
|---|---|---|---|---|
| linkage DG sz 1 | TZKG0110-10001_ | Titan Silver | without | 1 pc |
| | TZKG0110-10004_ | Titan Silver | without | 25 pcs |
| linkage DG sz 2 1V | TZKG0120-10001_ | Titan Silver | without | 1 pc |
| | TZKG0120-10004_ | Titan Silver | without | 25 pcs |
| linkage DG sz 3 1V | TZKG0130-10001_ | Titan Silver | without | 1 pc |
| | TZKG0130-10004_ | Titan Silver | without | 25 pcs |

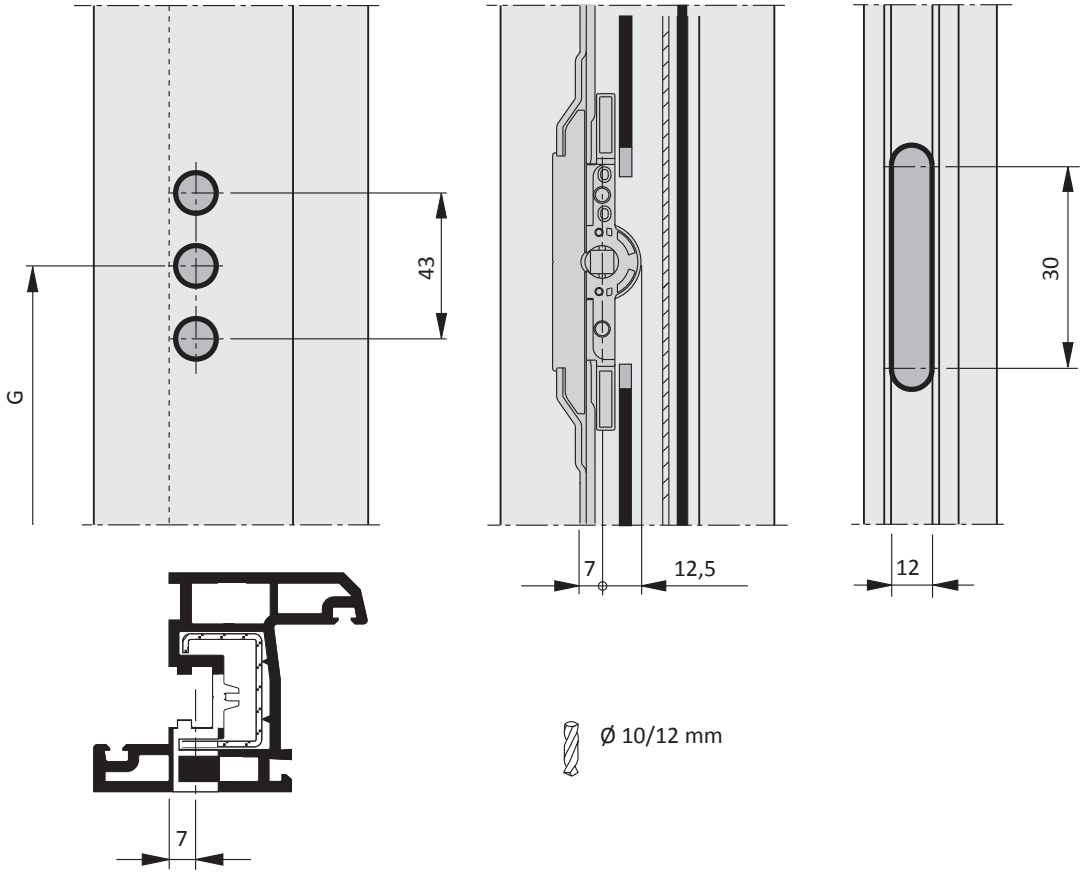
43
G
7
12,5
30
12
7
Ø 10/12 mm

## Technical information

| Part number | Description | FFH | Dimensions (mm) | | | | | | |
|---|---|---|---|---|---|---|---|---|---|
| | | | G1 | A | B | C | D | | |
| TGKG1220-... | gear DG 7 sz 60/G250 | 601 - 800 | 250 | 800 | - | - | - | 1 | 4 |
| TGKG1030-... | gear DG 7 sz 60/G300 | 601 - 800 | 300 | 800 | - | - | - | 1 | 4 |
| TGKG1230-... | gear DG 7 sz .80/G250 1V | 801 - 1000 | 250 | 1000 | 218 | - | - | 2 | 5 |
| TGKG1040-... | gear DG 7 sz 80/G300 1V | 801 - 1000 | 300 | 1000 | 168 | - | - | 2 | 5 |
| TGKG1050-... | gear DG 7 sz 80/G400 1V | 801 - 1000 | 400 | 1000 | 96 | - | - | 2 | 5 |
| TGKG1240-... | gear DG 7 sz 100/G250 1V | 1001 - 1200 | 250 | 1200 | 336 | - | - | 2 | 6 |
| TGKG1060-... | gear DG 7 sz 100/G400 1V | 1001 - 1200 | 400 | 1200 | 186 | - | - | 2 | 6 |
| TGKG1070-... | gear DG 7 sz 100/G500 1V | 1001 - 1200 | 500 | 1200 | 96 | - | - | 2 | 6 |
| TGKG1080-... | gear DG 7 sz 120/G400 1V | 1201 - 1400 | 400 | 1400 | 286 | - | - | 2 | 8 |
| TGKG1090-... | gear DG 7 sz 120/G500 1V | 1201 - 1400 | 500 | 1400 | 186 | - | - | 2 | 8 |
| TGKG1100-... | gear DG 7 sz 120/G600 1V | 1201 - 1400 | 600 | 1400 | 96 | - | - | 2 | 7 |
| TGKG1110-... | gear DG 7 sz 140/G500 1V | 1401 - 1600 | 500 | 1600 | 286 | - | - | 2 | 9 |
| TGKG1120-... | gear DG 7 sz 140/G600 1V | 1401 - 1600 | 600 | 1600 | 186 | - | - | 2 | 8 |
| TGKG1130-... | gear DG 7 sz 140/G700 1V | 1401 - 1600 | 700 | 1600 | 96 | - | - | 2 | 7 |
| TGKG1140-... | gear DG 7 sz 160/G600 1V | 1601 - 1800 | 600 | 1800 | 96 | - | - | 2 | 9 |
| TGKG1150-... | gear DG 7 sz 160/G700 2V | 1601 - 1800 | 700 | 1800 | 451 | 149 | - | 3 | 10 |
| TGKG1160-... | gear DG 7 sz 180/G600 2V | 1801 - 2000 | 600 | 2000 | 96 | - | 668 | 3 | 10 |
| TGKG1170-... | gear DG 7 sz 180/G700 2V | 1801 - 2000 | 700 | 2000 | 96 | - | 588 | 3 | 10 |
| TGKG1180-... | gear DG 7 sz 180/G1000 2V | 1801 - 2000 | 1000 | 2000 | 266 | 334 | - | 3 | 12 |
| TGKG1190-... | gear DG 7 sz 200/G600 2V | 2001 - 2200 | 600 | 2200 | 96 | - | 668 | 3 | 11 |
| TGKG1200-... | gear DG 7 sz 200/G1000 2V | 2001 - 2200 | 1000 | 2200 | 266 | 334 | - | 3 | 13 |
| TGKG1210-... | gear DG 7 sz 220/G1000 2V | 2201 - 2400 | 1000 | 2400 | 266 | 334 | - | 3 | 11 |

- Backset 7 mm
- For basic security
- Reverse-action
- Handle height constant

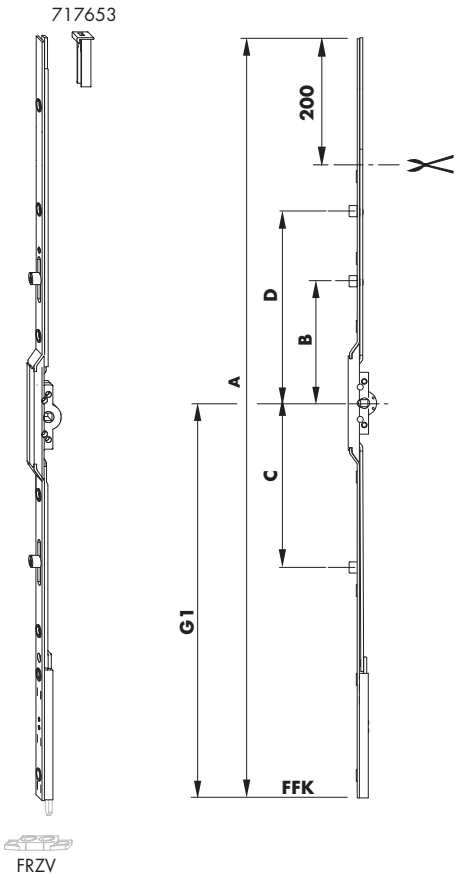

## Sales information

| Description | Part number | Surface | Colour | Box quantity |
|---|---|---|---|---|
| gear DG 7 sz 60/G250 | TGKG1220-10001_ | Titan Silver | without | 1 pc |
| | TGKG1220-10004_ | Titan Silver | without | 25 pcs |
| gear DG 7 sz 60/G300 | TGKG1030-10001_ | Titan Silver | without | 1 pc |
| | TGKG1030-10004_ | Titan Silver | without | 25 pcs |
| gear DG 7 sz .80/G250 1V | TGKG1230-10001_ | Titan Silver | without | 1 pc |
| | TGKG1230-10004_ | Titan Silver | without | 25 pcs |
| gear DG 7 sz 80/G300 1V | TGKG1040-10001_ | Titan Silver | without | 1 pc |
| | TGKG1040-10004_ | Titan Silver | without | 25 pcs |
| gear DG 7 sz 80/G400 1V | TGKG1050-10001_ | Titan Silver | without | 1 pc |
| | TGKG1050-10004_ | Titan Silver | without | 25 pcs |
| gear DG 7 sz 100/G250 1V | TGKG1240-10001_ | Titan Silver | without | 1 pc |
| | TGKG1240-10004_ | Titan Silver | without | 25 pcs |
| gear DG 7 sz 100/G400 1V | TGKG1060-10001_ | Titan Silver | without | 1 pc |
| | TGKG1060-10004_ | Titan Silver | without | 25 pcs |
| gear DG 7 sz 100/G500 1V | TGKG1070-10001_ | Titan Silver | without | 1 pc |
| | TGKG1070-10004_ | Titan Silver | without | 25 pcs |
| gear DG 7 sz 120/G400 1V | TGKG1080-10001_ | Titan Silver | without | 1 pc |
| | TGKG1080-10004_ | Titan Silver | without | 25 pcs |
| gear DG 7 sz 120/G500 1V | TGKG1090-10001_ | Titan Silver | without | 1 pc |
| | TGKG1090-10004_ | Titan Silver | without | 25 pcs |
| gear DG 7 sz 120/G600 1V | TGKG1100-10001_ | Titan Silver | without | 1 pc |
| | TGKG1100-10004_ | Titan Silver | without | 25 pcs |
| gear DG 7 sz 140/G500 1V | TGKG1110-10001_ | Titan Silver | without | 1 pc |
| | TGKG1110-10002_ | Titan Silver | without | 10 pcs |
| gear DG 7 sz 140/G600 1V | TGKG1120-10001_ | Titan Silver | without | 1 pc |
| | TGKG1120-10002_ | Titan Silver | without | 10 pcs |
| gear DG 7 sz 140/G700 1V | TGKG1130-10001_ | Titan Silver | without | 1 pc |
| | TGKG1130-10002_ | Titan Silver | without | 10 pcs |
| gear DG 7 sz 160/G600 1V | TGKG1140-10001_ | Titan Silver | without | 1 pc |
| | TGKG1140-10002_ | Titan Silver | without | 10 pcs |
| gear DG 7 sz 160/G700 2V | TGKG1150-10001_ | Titan Silver | without | 1 pc |
| | TGKG1150-10002_ | Titan Silver | without | 10 pcs |
| gear DG 7 sz 180/G600 2V | TGKG1160-10001_ | Titan Silver | without | 1 pc |
| | TGKG1160-10002_ | Titan Silver | without | 10 pcs |
| gear DG 7 sz 180/G700 2V | TGKG1170-10001_ | Titan Silver | without | 1 pc |
| | TGKG1170-10002_ | Titan Silver | without | 10 pcs |
| gear DG 7 sz 180/G1000 2V | TGKG1180-10001_ | Titan Silver | without | 1 pc |
| | TGKG1180-10002_ | Titan Silver | without | 10 pcs |
| gear DG 7 sz 200/G600 2V | TGKG1190-10001_ | Titan Silver | without | 1 pc |
| | TGKG1190-10002_ | Titan Silver | without | 10 pcs |
| gear DG 7 sz 200/G1000 2V | TGKG1200-10001_ | Titan Silver | without | 1 pc |
| | TGKG1200-10002_ | Titan Silver | without | 10 pcs |
| gear DG 7 sz 220/G1000 2V | TGKG1210-10001_ | Titan Silver | without | 1 pc |
| | TGKG1210-10002_ | Titan Silver | without | 10 pcs |

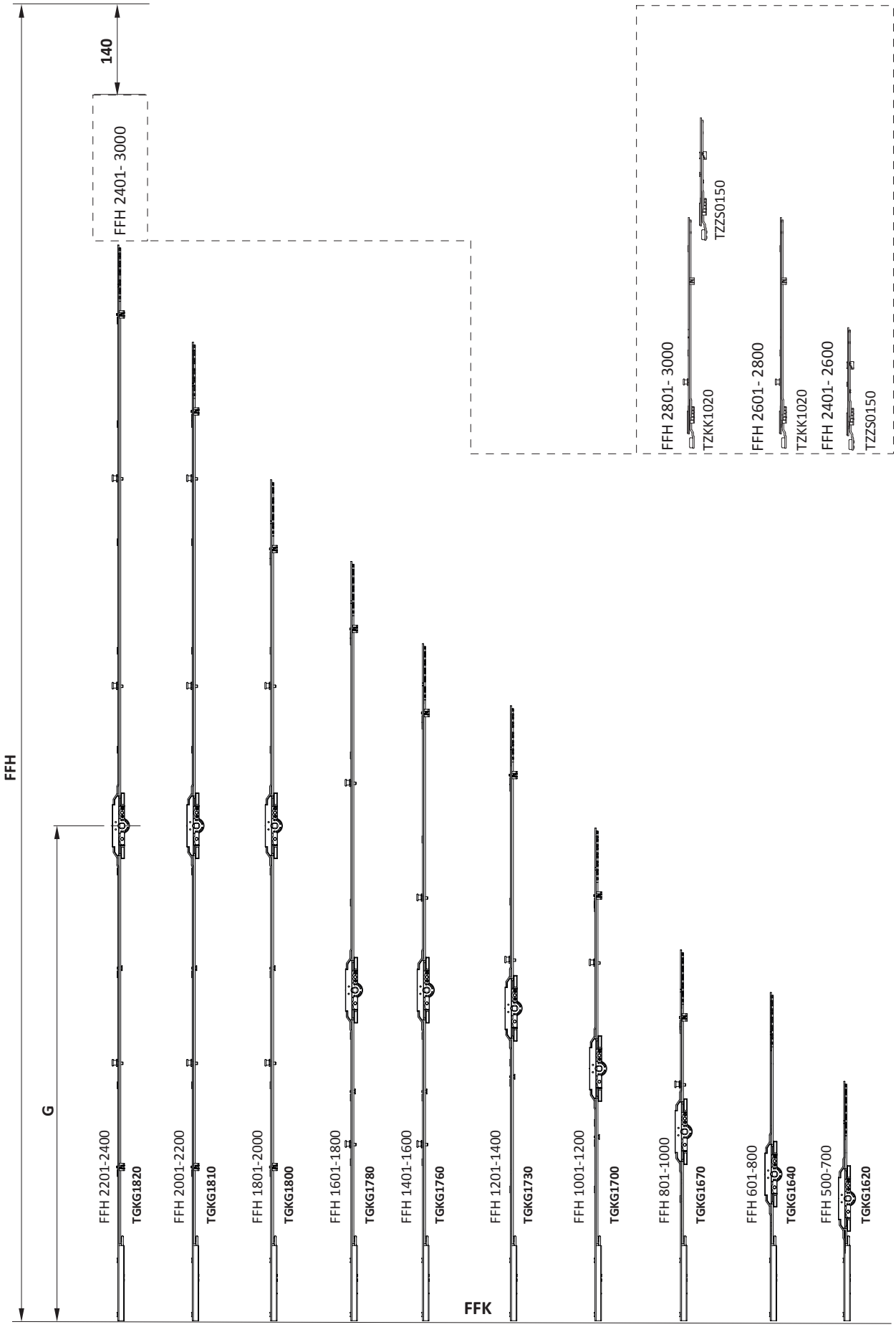
FFH
G
140
FFH 2401- 3000
FFH 2201-2400
TGKG1820
FFH 2001-2200
TGKG1810
FFH 1801-2000
TGKG1800
FFH 1601-1800
TGKG1780
FFH 1401-1600
TGKG1760
FFH 1201-1400
TGKG1730
FFH 1001-1200
TGKG1700
FFH 801-1000
TGKG1670
FFH 601-800
TGKG1640
FFH 500-700
TGKG1620
FFK
FFH 2801- 3000
TZKK1020
TZZS0150
FFH 2601- 2800
TZKK1020
FFH 2401- 2600
TZZS0150

| Material number | Description | Material number | Description | FFH (mm) | G (mm) |
|---|---|---|---|---|---|
| **TGKG1620** | gear 7 AF/DG sz 50/G190 | | | 500 - 700 | 190 |
| **TGKG1640** | gear 7 AF/DG sz 60/G300 | | | 601 - 800 | 300 |
| **TGKG1670** | gear 7 AF/DG sz 80/G400 1RS | | | 801 - 1000 | 400 |
| **TGKG1700** | gear 7 AF/DG sz 100/G500 1RS | | | 1001 - 1200 | 500 |
| **TGKG1730** | gear 7 AF/DG sz 120/G600 1RS | | | 1201 - 1400 | 600 |
| **TGKG1760** | gear 7 AF/DG sz 140/G700 2RS | | | 1401 - 1600 | 700 |
| **TGKG1780** | gear 7 AF/DG sz 160/G700 2RS 70 | | | 1601 - 1800 | 700 |
| **TGKG1800** | gear 7 AF/DG sz 180/G1000 2RS 70 | | | 1801 - 2000 | 1000 |
| **TGKG1810** | gear 7 AF/DG sz 200/G1000 3RS 70 | | | 2001 - 2200 | 1000 |
| **TGKG1820** | gear 7 AF/DG sz 220/G1000 3RS 70 | | | 2201 - 2400 | 1000 |
| **TGKG1820** | gear 7 AF/DG sz 220/G1000 3RS 70 | **TZZS0150** | linkage AF sz 1 | 2401 - 2600 | 1000 |
| **TGKG1820** | gear 7 AF/DG sz 220/G1000 3RS 70 | **TZKK1020** | linkage KK/AF sz 2 1RS | 2601 - 2800 | 1000 |
| **TGKG1820** | gear 7 AF/DG sz 220/G1000 3RS 70 | **TZKK1020** | linkage KK/AF sz 2 1RS | 2801 - 3000 | 1000 |
| | | **TZZS0150** | linkage AF sz 1 | | |

## Technical information

| Part number | Description | FFH | Dimensions (mm) | | | | | | |
|---|---|---|---|---|---|---|---|---|---|
| | | | G1 | A | B | C | D | | |
| TGKG1620-... | gear 7 AF/DG sz 50/G190 | 500 - 700 | 190 | 560 | - | - | - | 1 | 3 |
| TGKG1630-... | gear 7 AF/DG sz 60/G250 | 601 - 800 | 250 | 660 | - | - | - | 1 | 4 |
| TGKG1640-... | gear 7 AF/DG sz 60/G300 | 601 - 800 | 300 | 660 | - | - | - | 1 | 4 |
| TGKG1650-... | gear 7 AF/DG sz 80/G250 1RS | 801 - 1000 | 250 | 860 | 480 | - | - | 2 | 5 |
| TGKG1660-... | gear 7 AF/DG sz 80/G300 1RS | 801 - 1000 | 300 | 860 | 480 | - | - | 2 | 5 |
| TGKG1670-... | gear 7 AF/DG sz 80/G400 1RS | 801 - 1000 | 400 | 860 | 480 | - | - | 2 | 4 |
| TGKG1680-... | gear 7 AF/DG sz 100/G250 1RS | 1001 - 1200 | 250 | 1060 | 680 | - | - | 2 | 6 |
| TGKG1690-... | gear 7 AF/DG sz 100/G400 1RS | 1001 - 1200 | 400 | 1060 | 680 | - | - | 2 | 5 |
| TGKG1700-... | gear 7 AF/DG sz 100/G500 1RS | 1001 - 1200 | 500 | 1060 | 680 | - | - | 2 | 6 |
| TGKG1710-... | gear 7 AF/DG sz 120/G400 1RS | 1201 - 1400 | 400 | 1260 | 680 | - | - | 2 | 6 |
| TGKG1720-... | gear 7 AF/DG sz 120/G500 1RS | 1201 - 1400 | 500 | 1260 | 680 | - | - | 2 | 7 |
| TGKG1730-... | gear 7 AF/DG sz 120/G600 1RS | 1201 - 1400 | 600 | 1260 | 680 | - | - | 2 | 6 |
| TGKG1740-... | gear 7 AF/DG sz 140/G500 2RS | 1401 - 1600 | 500 | 1460 | 880 | 380 | - | 3 | 7 |
| TGKG1750-... | gear 7 AF/DG sz 140/G600 2RS | 1401 - 1600 | 600 | 1460 | 880 | 380 | - | 3 | 7 |
| TGKG1760-... | gear 7 AF/DG sz 140/G700 2RS | 1401 - 1600 | 700 | 1460 | 880 | 380 | - | 3 | 8 |
| TGKG1770-... | gear 7 AF/DG sz 160/G600 2RS 70 | 1601 - 1800 | 600 | 1660 | 1080 | 380 | - | 3 | 8 |
| TGKG1780-... | gear 7 AF/DG sz 160/G700 2RS 70 | 1601 - 1800 | 700 | 1660 | 1080 | 380 | - | 3 | 8 |
| TGKG1790-... | gear 7 AF/DG sz 180/G700 2RS 70 | 1801 - 2000 | 700 | 1860 | 1280 | 580 | - | 3 | 9 |
| TGKG1800-... | gear 7 AF/DG sz 180/G1000 2RS 70 | 1801 - 2000 | 1000 | 1860 | 1280 | 580 | - | 3 | 9 |
| TGKG1810-... | gear 7 AF/DG sz 200/G1000 3RS 70 | 2001 - 2200 | 1000 | 2060 | 1280 | 580 | 1680 | 4 | 10 |
| TGKG1820-... | gear 7 AF/DG sz 220/G1000 3RS 70 | 2201 - 2400 | 1000 | 2260 | 1280 | 580 | 1680 | 4 | 11 |

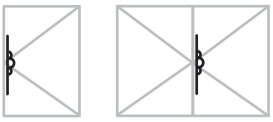

- Backset 7 mm
- For basic security
- Reverse-action
- Handle height constant
- Suitable for snapper TFST FFH 1600-2400 mm

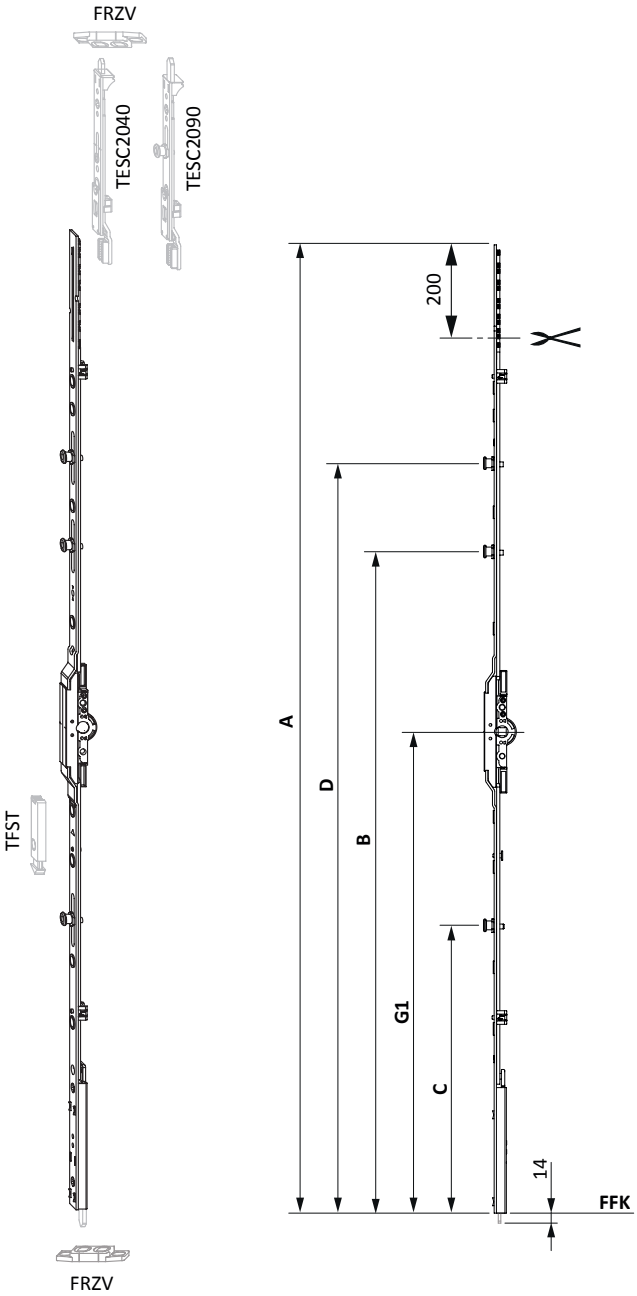
FRZV
TESC2040
TESC2090
TFST
FRZV
200
A
D
B
G1
C
14
FFK

## Sales information

| Description | Part number | Surface | Colour | Box quantity |
|---|---|---|---|---|
| gear 7 AF/DG sz 50/G190 | TGKG1620-10001_ | Titan Silver | without | 1 pc |
| | TGKG1620-10004_ | Titan Silver | without | 25 pcs |
| gear 7 AF/DG sz 60/G250 | TGKG1630-10001_ | Titan Silver | without | 1 pc |
| | TGKG1630-10004_ | Titan Silver | without | 25 pcs |
| gear 7 AF/DG sz 60/G300 | TGKG1640-10001_ | Titan Silver | without | 1 pc |
| | TGKG1640-10004_ | Titan Silver | without | 25 pcs |
| gear 7 AF/DG sz 80/G250 1RS | TGKG1650-10001_ | Titan Silver | without | 1 pc |
| | TGKG1650-10004_ | Titan Silver | without | 25 pcs |
| gear 7 AF/DG sz 80/G300 1RS | TGKG1660-10001_ | Titan Silver | without | 1 pc |
| | TGKG1660-10004_ | Titan Silver | without | 25 pcs |
| gear 7 AF/DG sz 80/G400 1RS | TGKG1670-10001_ | Titan Silver | without | 1 pc |
| | TGKG1670-10004_ | Titan Silver | without | 25 pcs |
| gear 7 AF/DG sz 100/G250 1RS | TGKG1680-10001_ | Titan Silver | without | 1 pc |
| | TGKG1680-10004_ | Titan Silver | without | 25 pcs |
| gear 7 AF/DG sz 100/G400 1RS | TGKG1690-10001_ | Titan Silver | without | 1 pc |
| | TGKG1690-10004_ | Titan Silver | without | 25 pcs |
| gear 7 AF/DG sz 100/G500 1RS | TGKG1700-10001_ | Titan Silver | without | 1 pc |
| | TGKG1700-10004_ | Titan Silver | without | 25 pcs |
| gear 7 AF/DG sz 120/G400 1RS | TGKG1710-10001_ | Titan Silver | without | 1 pc |
| | TGKG1710-10004_ | Titan Silver | without | 25 pcs |
| gear 7 AF/DG sz 120/G500 1RS | TGKG1720-10001_ | Titan Silver | without | 1 pc |
| | TGKG1720-10004_ | Titan Silver | without | 25 pcs |
| gear 7 AF/DG sz 120/G600 1RS | TGKG1730-10001_ | Titan Silver | without | 1 pc |
| | TGKG1730-10004_ | Titan Silver | without | 25 pcs |
| gear 7 AF/DG sz 140/G500 2RS | TGKG1740-10001_ | Titan Silver | without | 1 pc |
| | TGKG1740-10002_ | Titan Silver | without | 10 pcs |
| gear 7 AF/DG sz 140/G600 2RS | TGKG1750-10001_ | Titan Silver | without | 1 pc |
| | TGKG1750-10002_ | Titan Silver | without | 10 pcs |
| gear 7 AF/DG sz 140/G700 2RS | TGKG1760-10001_ | Titan Silver | without | 1 pc |
| | TGKG1760-10002_ | Titan Silver | without | 10 pcs |
| gear 7 AF/DG sz 160/G600 2RS 70 | TGKG1770-10001_ | Titan Silver | without | 1 pc |
| | TGKG1770-10002_ | Titan Silver | without | 10 pcs |
| gear 7 AF/DG sz 160/G700 2RS 70 | TGKG1780-10001_ | Titan Silver | without | 1 pc |
| | TGKG1780-10002_ | Titan Silver | without | 10 pcs |
| gear 7 AF/DG sz 180/G700 2RS 70 | TGKG1790-10001_ | Titan Silver | without | 1 pc |
| | TGKG1790-10002_ | Titan Silver | without | 10 pcs |
| gear 7 AF/DG sz 180/G1000 2RS 70 | TGKG1800-10001_ | Titan Silver | without | 1 pc |
| | TGKG1800-10002_ | Titan Silver | without | 10 pcs |
| gear 7 AF/DG sz 200/G1000 3RS 70 | TGKG1810-10001_ | Titan Silver | without | 1 pc |
| | TGKG1810-10002_ | Titan Silver | without | 10 pcs |
| gear 7 AF/DG sz 220/G1000 3RS 70 | TGKG1820-10001_ | Titan Silver | without | 1 pc |
| | TGKG1820-10002_ | Titan Silver | without | 10 pcs |

| Description | Material | Page |
|---|---|---|
| gear GF | FGWF0010 | 3.8 - 2 |
| intermediate gear KF | ZGZW0010, ZGZW0020, ZGZW0030, ZGZW0040, ZGZW0050 | 3.8 - 3 |
| intermediate gear H | ZGZW0080, ZGZW0090, TMGB0010 | 3.8 - 5 |
| crt. cardan drive gear | 306345, 306338, 306478, FMKA0010 | 3.8 - 7 |

## Technical information

| Part number | Description | Dimensions (mm) A | | |
|---|---|---|---|---|
| FGWF0010-... | gear GF | 397 | 0 | 6 |

- Backset 16 mm
- Suitable for elements with round, semi-circular or curved surfaces
- For specific hardware sets for individual designs, please speak to our applications technology staff

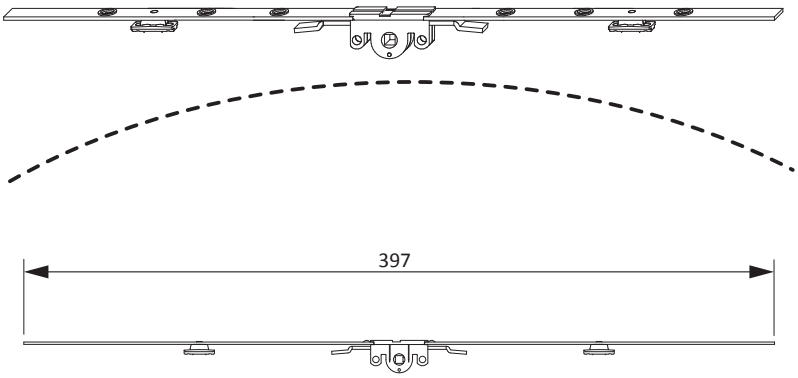




## Sales information

| Description | Part number | Surface | Colour | Box quantity |
|---|---|---|---|---|
| gear GF | FGWF0010-10001_ | Titan Silver | without | 1 pc |
| | FGWF0010-10004_ | Titan Silver | without | 25 pcs |

## Technical information

| Part number | Description | Dimensions (mm)<br>A |
|---|---|---|
| ZGZW0010-... | intermediate gear sz 1 .. | 8,50 |
| ZGZW0020-... | intermediate gear sz 2 .. | 11,50 |
| ZGZW0030-... | intermediate gear sz 3 .. | 13 |
| ZGZW0040-... | intermediate gear sz 4 .. | 14,40 |
| ZGZW0050-... | intermediate gear sz 5 .. | 15,70 |

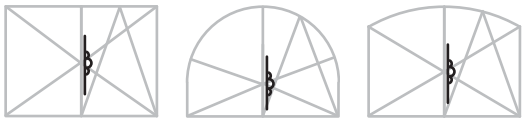

- For double sash windows/french doors without a centre mullion
- Symmetrical interior and exterior view
- Only to be combined with gears backset 7mm
- Reduction from 7mm to -6mm backset

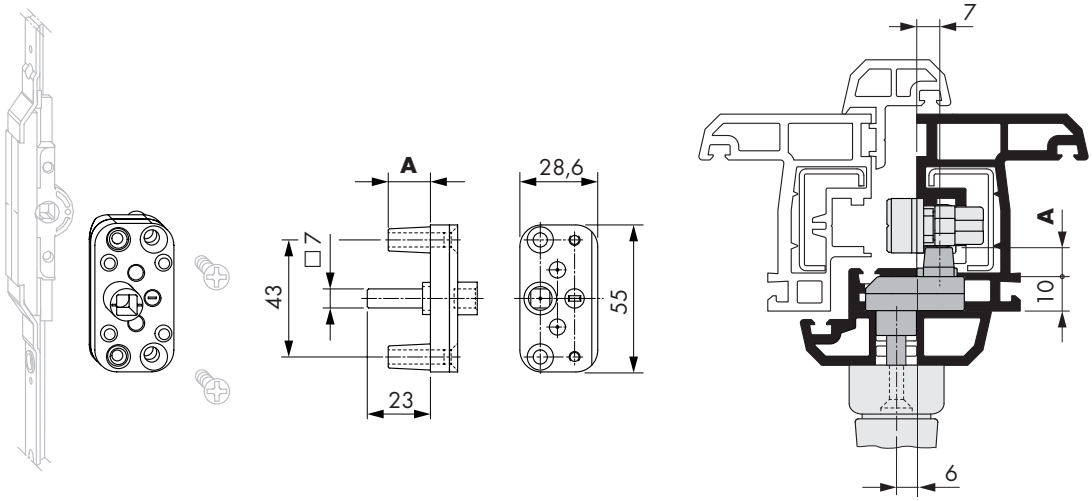


## Sales information

| Description | Part number | Surface | Colour | Box quantity |
|---|---|---|---|---|
| intermediate gear sz 1 .. | ZGZW0010-10001_ | Titan Silver | without | 1 pc |
| | ZGZW0010-10003_ | Titan Silver | without | 20 pcs |
| intermediate gear sz 2 .. | ZGZW0020-10001_ | Titan Silver | without | 1 pc |
| | ZGZW0020-10003_ | Titan Silver | without | 20 pcs |
| intermediate gear sz 3 .. | ZGZW0030-10001_ | Titan Silver | without | 1 pc |
| | ZGZW0030-10003_ | Titan Silver | without | 20 pcs |
| intermediate gear sz 4 .. | ZGZW0040-10001_ | Titan Silver | without | 1 pc |
| | ZGZW0040-10003_ | Titan Silver | without | 20 pcs |
| intermediate gear sz 5 .. | ZGZW0050-10001_ | Titan Silver | without | 1 pc |
| | ZGZW0050-10003_ | Titan Silver | without | 20 pcs |

## Drill holes and routings

- 1. Place the mullion cover centrally.
  2. Drill holes for the handle (Ø 12 mm).
  3. Carry out routing for the intermediate gear (routing collar Ø 27 mm, routing bit Ø 16 mm).
  4. Take into account the direction (DIN right or DIN left).
  5. Insert gear 7, then insert the intermediate gear into the cut-out and fix together with M5 countersunk screws.
  6. Place the mullion cover over the milling cut-out and fix into position.
  7. Connect the handle and intermediate gear with M5 countersunk screws, screw in place taking into account the spindle length.

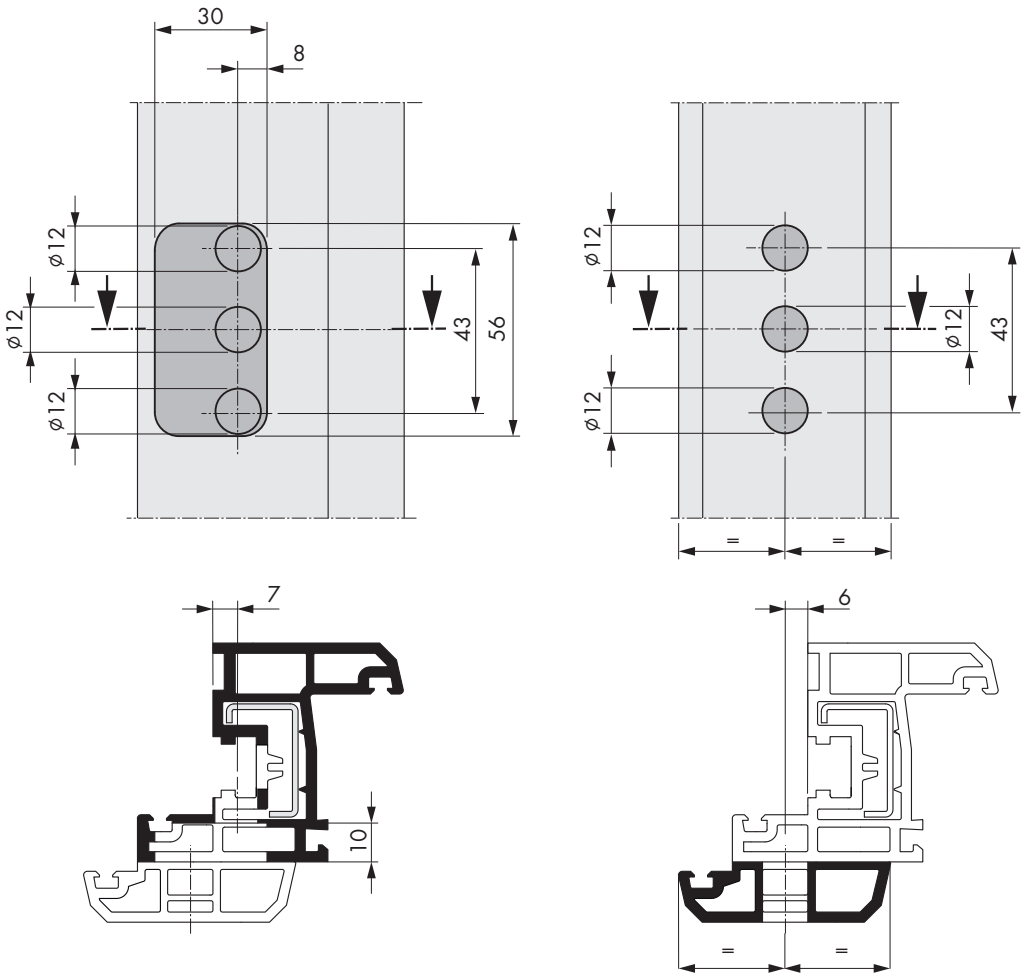

## Technical information

| Part number | Description | Dimensions (mm) | |
|---|---|---|---|
| | | A | B |
| ZGZW0080-... | intermediate gear UEB 20mm | 48 | 18 |
| ZGZW0090-... | intermediate gear UEB 18mm | 46 | 18 |
| TMGB0010-... | intermed.gear anti-drill guard | - | - |

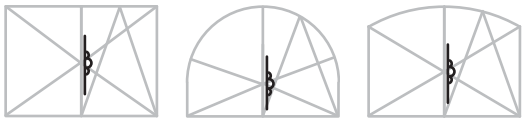

- For double sash windows/french doors without a centre mullion
- Symmetrical interior and exterior view
- Only to be combined with SIEGENIA gears backset 15mm
- Reduction from 15mm to -5mm backset
- Use the TMGB anti-drill guard for requirements in accordance with DIN EN 1627
- You can find our installation video here: https://youtu.be/LXUQAMNexog

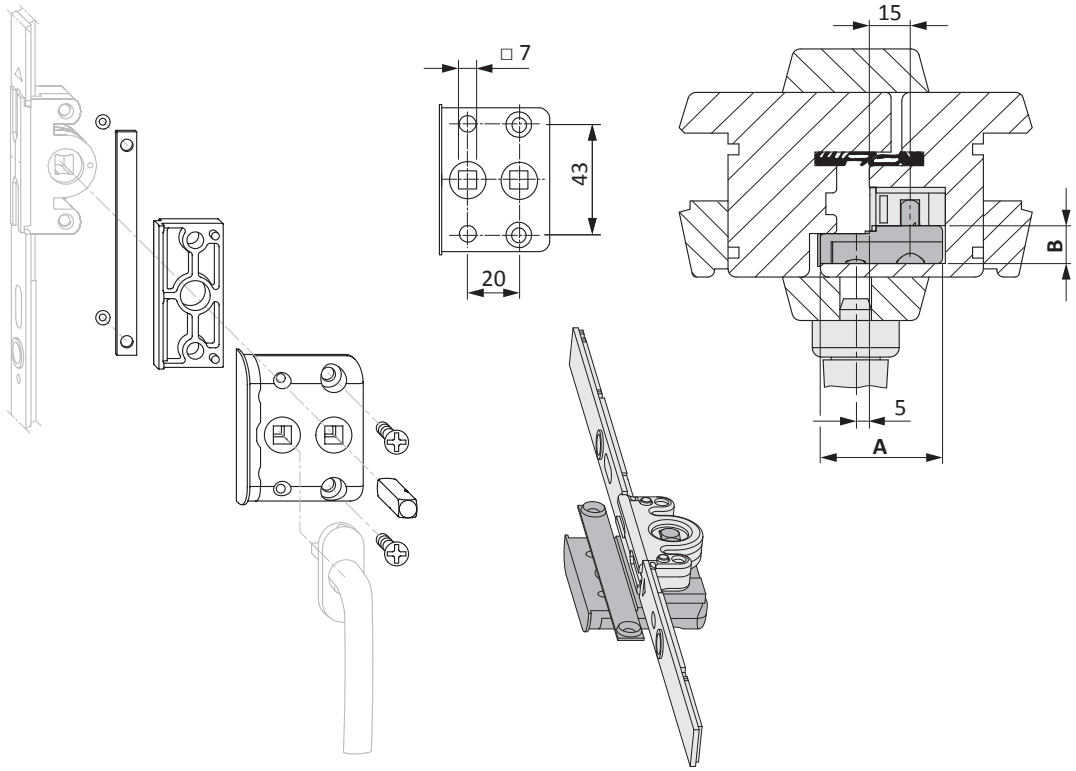


## Sales information

| Description | Part number | Surface | Colour | Box quantity |
|---|---|---|---|---|
| intermediate gear UEB 20mm | ZGZW0080-10001_ | Titan Silver | without | 1 pc |
| | ZGZW0080-10005_ | Titan Silver | without | 50 pcs |
| intermediate gear UEB 18mm | ZGZW0090-10001_ | Titan Silver | without | 1 pc |
| | ZGZW0090-10005_ | Titan Silver | without | 50 pcs |
| intermed.gear anti-drill guard | TMGB0010-L3401_ | lacquered | titan m bright | 1 pc |
| | TMGB0010-L3405_ | lacquered | titan m bright | 50 pcs |

## Drill holes and routings

- 1. Centre the inner mullion moulding according to the backset.
  2. Insert template into the hardware groove according to dimension G and clamp with middle drill jig bush.
  3. Drill holes for handle (Ø 12 mm).
  4. Carry out milling for intermediate gear (spacer disk Ø 27 mm, milling tool Ø 16 mm).
  5. Note the direction of impact (DIN right or DIN left).
  6.Fix the intermediate gear and, if necessary, the distance plate with countersunk screw M5 and square spindle to the gear 15 (9 mm NA = groove direction of intermediate gear, 13 mm NA = groove direction of gear)
  .
  7. Insert the gear into the milling groove and fix in place.
  8. Connect the handle and intermediate gear with countersunk screws M5. Note screw and spindle lengths.

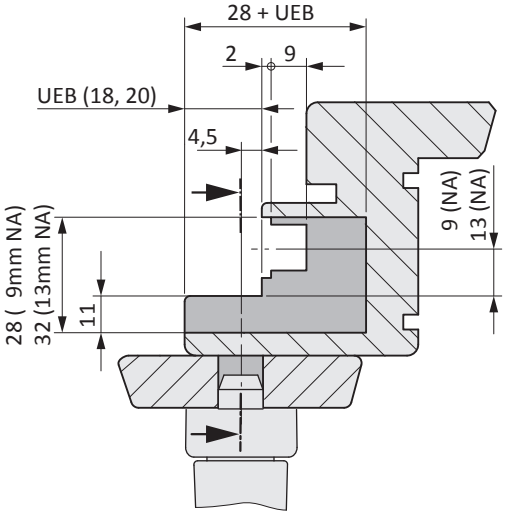


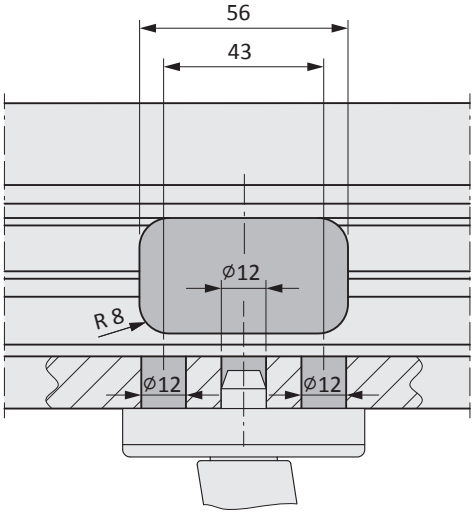


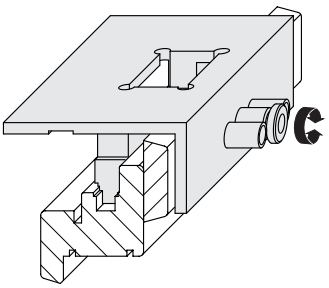

12/18-9 147207
12/18-13 TAFS0010

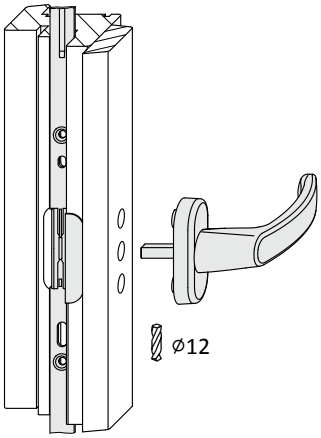


3.8

## Technical information

| Part number | Description |
|---|---|
| 306345 | cardan drive gear 34-39mm .. |
| 306338 | cardan drive gear 39-44mm .. |
| 318478 | cardan drive gear 44-49mm .. |
| FMKA0010-... | cardan drive gear 49-54mm .. |

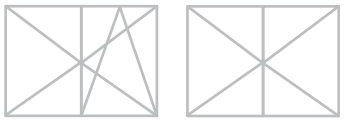

- Only to be combined with gears backset 7mm
- Symmetrical interior view of the window profiles
- Without centre pole with inner sill bar
- *** Additionally required:**
  for PVC elements - collar bushing, 713426
  for timber elements - threaded plug M5, 723678
- Detailed instructions for timber elements see installation instruction FHde1026
- Detailed instructions for PVC elements see installation instruction FKde1019

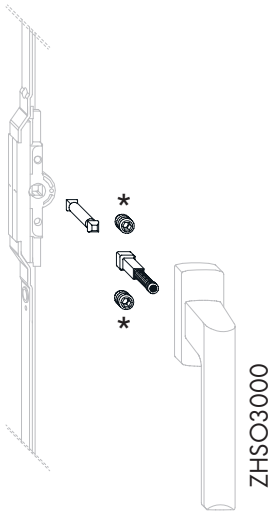


## Sales information

| Description | Part number | Surface | Colour | Box quantity |
|---|---|---|---|---|
| cardan drive gear 34-39mm .. | 306345 | Titan Silver | without | 50 pcs |
| cardan drive gear 39-44mm .. | 306338 | Titan Silver | without | 50 pcs |
| cardan drive gear 44-49mm .. | 318478 | Titan Silver | without | 50 pcs |
| cardan drive gear 49-54mm .. | FMKA0010-10005_ | Titan Silver | without | 50 pcs |

| Description | Material | Page |
|---|---|---|
| linkage BS/FH+ | TZBS0180, TZBS0190, TZBS0300, TZBS0200 | 4 - 2 |
| extension+ | TVSO0200, TVSL0320, TVSL0330, TVSL0340, TVSL0350, TVSL0360, TVSL0370 | 4 - 4 |
| linkage AF | TZZS0150 | 4 - 6 |
| linkage additional stay | TZOK1030, TZOK1010 | 4 - 7 |
| linkage KK/AF | TZKK1010, TZKK1020, TZKK1050, TZKK1070 | 4 - 8 |
| linkage AF SB/RS | TZKS1020, TZKS1030, TZKS1080, TZKS1090 | 4 - 9 |
| linkage AF 1SB-VSU | TZKS1060, TZKS1070 | 4 - 10 |
| linkage AF A0767 | TZKS1040, TZKS1050 | 4 - 11 |
| linkage KS sec.sash 8 | TZKS1010 | 4 - 12 |
| linkage AF/RB | TZZS0100, TZZS0110, TZZS0120, TZZS0130, TZZS0140 | 4 - 13 |
| linkage AF/RB-A | TZZS0210 | 4 - 15 |
| linkage RB | TVNL0060, TVNL0050 | 4 - 16 |
| linkage AF/UE | TZZS0160 | 4 - 17 |
| linkage AF/UE 1 RS | TZZS0250 | 4 - 18 |
| linkage US A0273 | TZUS1090 | 4 - 19 |
| linkage US FH A0273 | TZUS1110 | 4 - 20 |
| extension A0273 | TVSL0420 | 4 - 21 |
| linkage AF 1RS/A | TZZS0200 | 4 - 22 |
| linkage AF 1RS/A | TZZS0180 | 4 - 23 |
| linkage AF 1V | TZZS0220 | 4 - 24 |
| linkage AF ZZ | TZZZ0010 | 4 - 25 |
| linkage AF ZZ A0273 | TZZZ0030 | 4 - 26 |
| linkage FPS/ZZ | TZZZ0040 | 4 - 27 |

## Technical information

| Part number | Description | Dimensions (mm) | | | |
|---|---|---|---|---|---|
| | | A | B | | |
| TZBS0180-... | linkage BS/FH sz 1+ 1RS | 304 | 217 | 1 | 2 |
| TZBS0190-... | linkage BS/FH sz 2+ 1RS | 504 | 417 | 1 | 3 |
| TZBS0300-... | linkage BS/FH sz 3+ 1RS 70 | 704 | 617 | 1 | 4 |
| TZBS0200-... | linkage BS/FH sz 3+ 1RS | 800 | 713 | 1 | 5 |

- Coupling location to slide underneath
- The range of application conforms to the connecting components

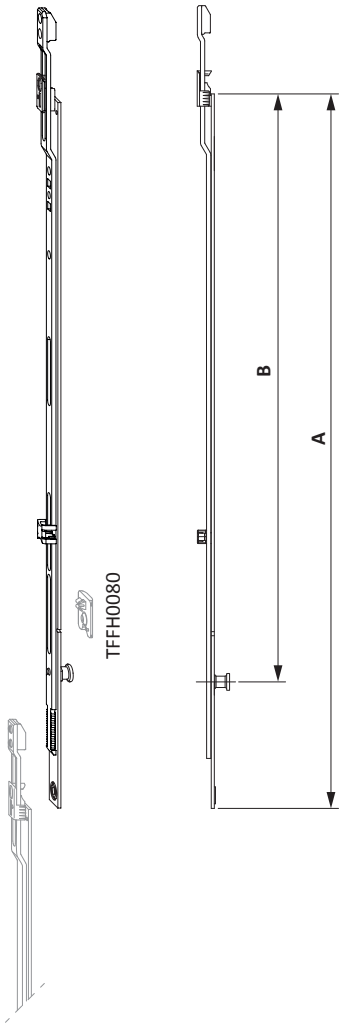

## Sales information

| Description | Part number | Surface | Colour | Box quantity |
|---|---|---|---|---|
| linkage BS/FH sz 1+ 1RS | TZBS0180-10001_ | Titan Silver | without | 1 pc |
| | TZBS0180-10004_ | Titan Silver | without | 25 pcs |
| | TZBS0180-10005_ | Titan Silver | without | 50 pcs |
| | TZBS0180-10027_ | Titan Silver | without | 800 pcs |
| | TZBS0180-10047_ | Titan Silver | without | 500 pcs |
| | TZBS0180-10077_ | Titan Silver | without | 1800 IVP |
| linkage BS/FH sz 2+ 1RS | TZBS0190-10001_ | Titan Silver | without | 1 pc |
| | TZBS0190-10004_ | Titan Silver | without | 25 pcs |
| | TZBS0190-10030_ | Titan Silver | without | 1200 pcs |
| | TZBS0190-10047_ | Titan Silver | without | 500 pcs |
| linkage BS/FH sz 3+ 1RS 70 | TZBS0300-10001_ | Titan Silver | without | 1 pc |
| | TZBS0300-10004_ | Titan Silver | without | 25 pcs |
| | TZBS0300-10030_ | Titan Silver | without | 1200 pcs |
| linkage BS/FH sz 3+ 1RS | TZBS0200-10001_ | Titan Silver | without | 1 pc |
| | TZBS0200-10004_ | Titan Silver | without | 25 pcs |
| | TZBS0200-10047_ | Titan Silver | without | 500 pcs |

## Technical information

| Part number | Description | Dimensions (mm) | | | |
|---|---|---|---|---|---|
| | | A | B | | |
| TVSO0200-... | extension sz 1+ 1RS | 93 | 48 | 1 | 1 |
| TVSL0320-... | extension sz 2+ 1RS | 143 | 98 | 1 | 2 |
| TVSL0330-... | extension sz 3+ 1RS | 243 | 198 | 1 | 2 |
| TVSL0340-... | extension sz 4+ 1RS | 343 | 298 | 1 | 3 |
| TVSL0350-... | extension sz 5+ 1RS | 443 | 398 | 1 | 3 |
| TVSL0360-... | extension sz 6+ 1RS | 543 | 498 | 1 | 4 |
| TVSL0370-... | extension sz 7+ 1RS | 643 | 598 | 1 | 4 |

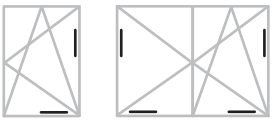

- Coupling location to slide underneath
- The range of application conforms to the connecting components

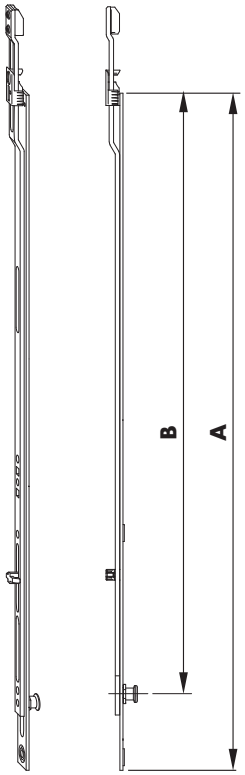

## Sales information

| Description | Part number | Surface | Colour | Box quantity |
|---|---|---|---|---|
| extension sz 1+ 1RS | TVSO0200-10001_ | Titan Silver | without | 1 pc |
| | TVSO0200-10005_ | Titan Silver | without | 50 pcs |
| extension sz 2+ 1RS | TVSL0320-10001_ | Titan Silver | without | 1 pc |
| | TVSL0320-10005_ | Titan Silver | without | 50 pcs |
| extension sz 3+ 1RS | TVSL0330-10001_ | Titan Silver | without | 1 pc |
| | TVSL0330-10005_ | Titan Silver | without | 50 pcs |
| extension sz 4+ 1RS | TVSL0340-10001_ | Titan Silver | without | 1 pc |
| | TVSL0340-10005_ | Titan Silver | without | 50 pcs |
| extension sz 5+ 1RS | TVSL0350-10001_ | Titan Silver | without | 1 pc |
| | TVSL0350-10005_ | Titan Silver | without | 50 pcs |
| extension sz 6+ 1RS | TVSL0360-10001_ | Titan Silver | without | 1 pc |
| | TVSL0360-10004_ | Titan Silver | without | 25 pcs |
| extension sz 7+ 1RS | TVSL0370-10001_ | Titan Silver | without | 1 pc |
| | TVSL0370-10004_ | Titan Silver | without | 25 pcs |

## Technical information

| Part number | Description | Dimensions (mm) A | | |
|---|---|---|---|---|
| TZZS0150-... | linkage AF sz 1 | 200 | 0 | 3 |

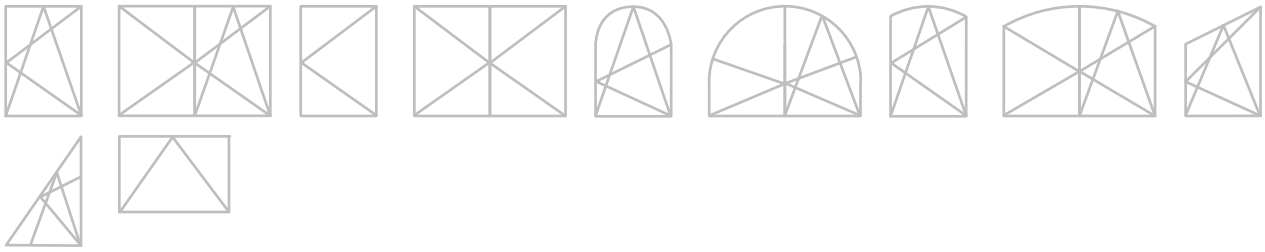

- Applicable in all designs

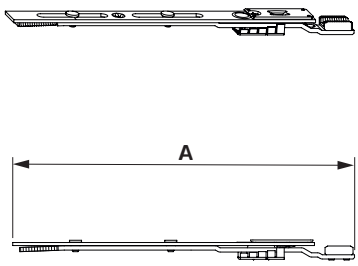


## Sales information

| Description | Part number | Surface | Colour | Box quantity |
|---|---|---|---|---|
| linkage AF sz 1 | TZZS0150-10001_ | Titan Silver | without | 1 pc |
| | TZZS0150-10004_ | Titan Silver | without | 25 pcs |

## Technical information

| Part number | Description | FFB | Dimensions (mm) | | | |
|---|---|---|---|---|---|---|
| | | | A | B | | |
| TZOK1030-... | linkage additional stay sz 1 | 900 - 1250 | 200 | - | 1 | 2 |
| TZOK1010-... | linkage additional stay 1RS | 1251 - 1650 | 400 | 305 | 2 | 3 |

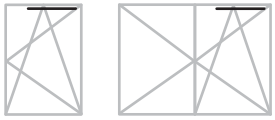

- The size range 900-1250 mm is applicable for the comfort stay.
- TZOK wWith striker plate to accommodate the additional stays.

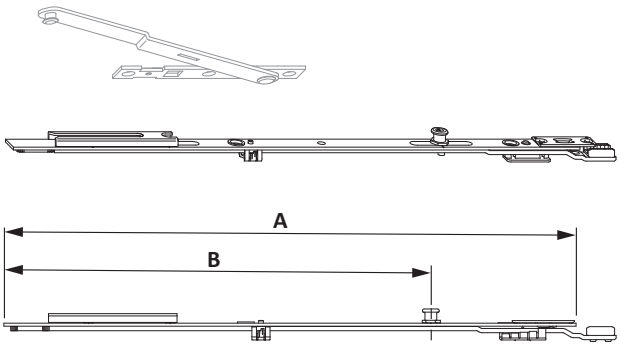


## Sales information

| Description | Part number | Surface | Colour | Box quantity |
|---|---|---|---|---|
| linkage additional stay sz 1 | TZOK1030-10001_ | Titan Silver | without | 1 pc |
| | TZOK1030-10004_ | Titan Silver | without | 25 pcs |
| linkage additional stay 1RS | TZOK1010-10001_ | Titan Silver | without | 1 pc |
| | TZOK1010-10004_ | Titan Silver | without | 25 pcs |

## Technical information

| Part number | Description | Dimensions (mm) | | | |
|---|---|---|---|---|---|
| | | A | B | | |
| TZKK1010-... | linkage KK/AF sz 1 1RS | 200 | 105 | 1 | 3 |
| TZKK1020-... | linkage KK/AF sz 2 1RS | 400 | 305 | 1 | 4 |
| TZKK1050-... | linkage KK/AF sz 3 1RS | 600 | 505 | 1 | 5 |
| TZKK1070-... | linkage KK/AF sz 4 1RS | 800 | 705 | 1 | 6 |

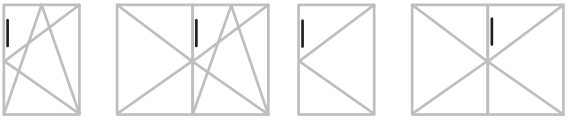

- The range of application conforms to the connecting components

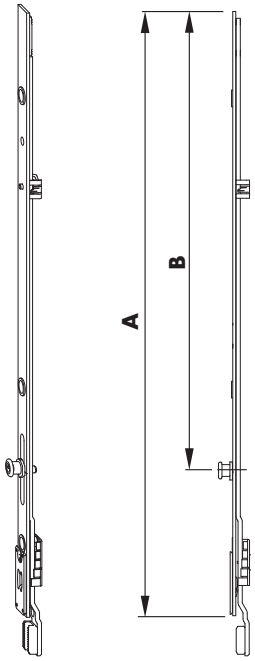


4

## Sales information

| Description | Part number | Surface | Colour | Box quantity |
|---|---|---|---|---|
| linkage KK/AF sz 1 1RS | TZKK1010-10001_ | Titan Silver | without | 1 pc |
| | TZKK1010-10004_ | Titan Silver | without | 25 pcs |
| linkage KK/AF sz 2 1RS | TZKK1020-10001_ | Titan Silver | without | 1 pc |
| | TZKK1020-10004_ | Titan Silver | without | 25 pcs |
| linkage KK/AF sz 3 1RS | TZKK1050-10001_ | Titan Silver | without | 1 pc |
| | TZKK1050-10004_ | Titan Silver | without | 25 pcs |
| linkage KK/AF sz 4 1RS | TZKK1070-10001_ | Titan Silver | without | 1 pc |
| | TZKK1070-10004_ | Titan Silver | without | 25 pcs |

## Technical information

| Part number | Description | Dimensions (mm) A | | |
|---|---|---|---|---|
| TZKS1020-... | linkage AF sz 1 1SB-RS | 200 | 0 | 3 |
| TZKS1030-... | linkage AF sz 2 1SB-RS | 400 | 0 | 4 |
| TZKS1080-... | linkage AF sz 3 1SB-RS | 600 | 0 | 5 |
| TZKS1090-... | linkage AF sz 4 1SB-RS | 800 | 0 | 6 |

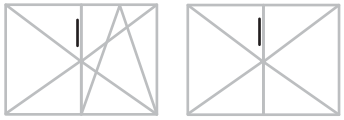

- Use in slave sashes with opposing fitting groove
- The range of application conforms to the connecting components

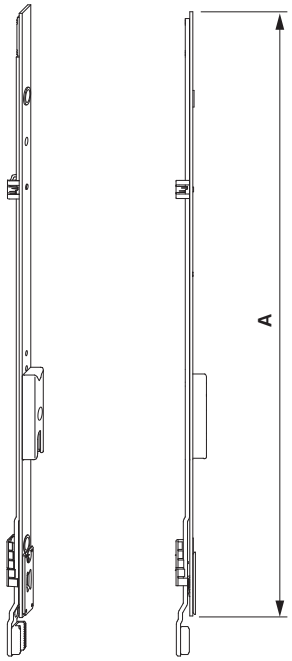


## Sales information

| Description | Part number | Surface | Colour | Box quantity |
|---|---|---|---|---|
| linkage AF sz 1 1SB-RS | TZKS1020-10001_ | Titan Silver | without | 1 pc |
| | TZKS1020-10004_ | Titan Silver | without | 25 pcs |
| linkage AF sz 2 1SB-RS | TZKS1030-10001_ | Titan Silver | without | 1 pc |
| | TZKS1030-10004_ | Titan Silver | without | 25 pcs |
| linkage AF sz 3 1SB-RS | TZKS1080-10001_ | Titan Silver | without | 1 pc |
| | TZKS1080-10004_ | Titan Silver | without | 25 pcs |
| linkage AF sz 4 1SB-RS | TZKS1090-10001_ | Titan Silver | without | 1 pc |
| | TZKS1090-10004_ | Titan Silver | without | 25 pcs |

## Technical information

| Part number | Description | Dimensions (mm) A | | |
|---|---|---|---|---|
| TZKS1060-... | linkage AF sz 1 1SB-VSU | 200 | 0 | 2 |
| TZKS1070-... | linkage AF sz 2 1SB-VSU | 400 | 0 | 3 |

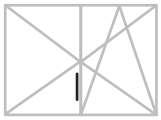

- The range of application conforms to the connecting components

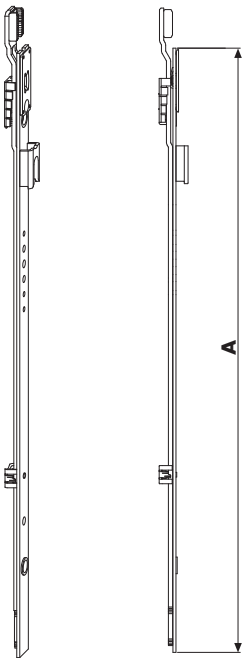


## Sales information

| Description | Part number | Surface | Colour | Box quantity |
|---|---|---|---|---|
| linkage AF sz 1 1SB-VSU | TZKS1060-10001_ | Titan Silver | without | 1 pc |
| | TZKS1060-10004_ | Titan Silver | without | 25 pcs |
| linkage AF sz 2 1SB-VSU | TZKS1070-10001_ | Titan Silver | without | 1 pc |
| | TZKS1070-10004_ | Titan Silver | without | 25 pcs |

## Technical information

| Part number | Description | Dimensions (mm)<br>A | | |
|---|---|---|---|---|
| TZKS1040-... | linkage AF sz 1 A0767 | 200 | 0 | 2 |
| TZKS1050-... | linkage AF sz 2 A0767 | 400 | 0 | 3 |

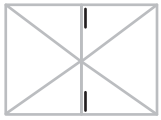

- The range of application conforms to the connecting components

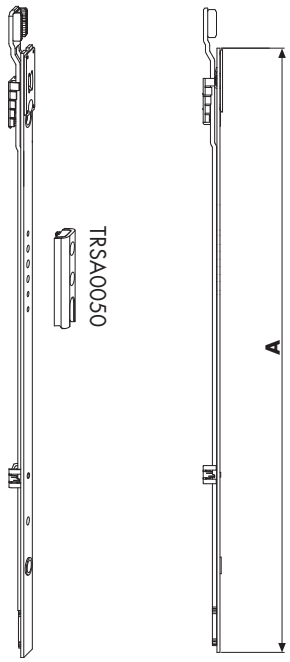


## Sales information

| Description | Part number | Surface | Colour | Box quantity |
|---|---|---|---|---|
| linkage AF sz 1 A0767 | TZKS1040-10001_ | Titan Silver | without | 1 pc |
| | TZKS1040-10004_ | Titan Silver | without | 25 pcs |
| linkage AF sz 2 A0767 | TZKS1050-10001_ | Titan Silver | without | 1 pc |
| | TZKS1050-10004_ | Titan Silver | without | 25 pcs |

## Technical information

| Part number | Description | Dimensions (mm)<br>A | | |
|---|---|---|---|---|
| TZKS1010-... | linkage KS sec.sash 8 sz 1 | 200 | 0 | 3 |

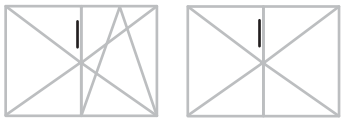

- Can be used in the secondary sash with groove ../8x4
- The range of application conforms to the connecting components

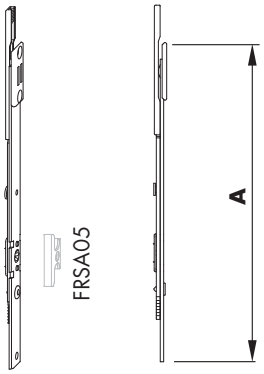


## Sales information

| Description | Part number | Surface | Colour | Box quantity |
|---|---|---|---|---|
| linkage KS sec.sash 8 sz 1 | TZKS1010-10001_ | Titan Silver | without | 1 pc |
| | TZKS1010-10004_ | Titan Silver | without | 25 pcs |

## Technical information

| Part number | Description | Dimensions (mm) | | | |
|---|---|---|---|---|---|
| | | A | B | | |
| TZZS0100-... | linkage AF/RB sz 1 OZ | 200 | - | 0 | 3 |
| TZZS0110-... | linkage AF/RB sz 1 OZ 1RS | 200 | 92 | 1 | 3 |
| TZZS0120-... | linkage AF/RB sz 2 OZ 1RS | 400 | 92 | 1 | 4 |
| TZZS0130-... | linkage AF/RB sz 3 OZ 1RS | 600 | 392 | 1 | 5 |
| TZZS0140-... | linkage AF/RB sz 4 OZ 1RS | 800 | 392 | 1 | 6 |

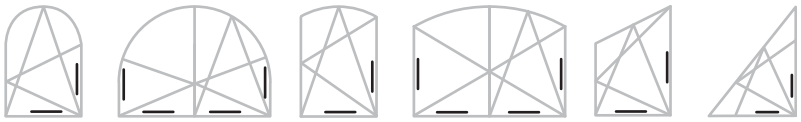

- The range of application conforms to the connecting components

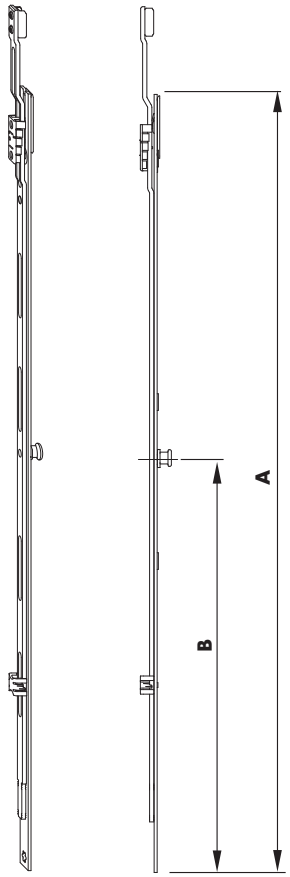

## Sales information

| Description | Part number | Surface | Colour | Box quantity |
|---|---|---|---|---|
| linkage AF/RB sz 1 OZ | TZZS0100-10001_ | Titan Silver | without | 1 pc |
| | TZZS0100-10004_ | Titan Silver | without | 25 pcs |
| linkage AF/RB sz 1 OZ 1RS | TZZS0110-10001_ | Titan Silver | without | 1 pc |
| | TZZS0110-10004_ | Titan Silver | without | 25 pcs |
| linkage AF/RB sz 2 OZ 1RS | TZZS0120-10001_ | Titan Silver | without | 1 pc |
| | TZZS0120-10004_ | Titan Silver | without | 25 pcs |
| linkage AF/RB sz 3 OZ 1RS | TZZS0130-10001_ | Titan Silver | without | 1 pc |
| | TZZS0130-10004_ | Titan Silver | without | 25 pcs |
| linkage AF/RB sz 4 OZ 1RS | TZZS0140-10001_ | Titan Silver | without | 1 pc |
| | TZZS0140-10004_ | Titan Silver | without | 25 pcs |

## Technical information

| Part number | Description | Dimensions (mm) | | | | |
|---|---|---|---|---|---|---|
| | | A | B | C | | |
| TZZS0210-... | linkage AF/RB-A | 400 | 63 | 200 | 0 | 1 |

- Packer refer to PDB line item FRUP02
- The range of application conforms to the connecting components

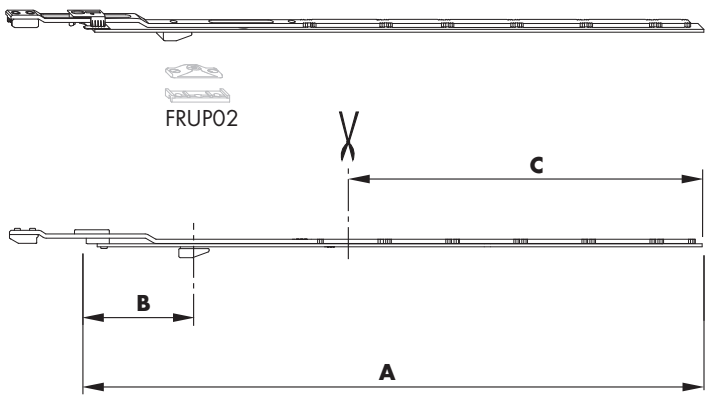


## Sales information

| Description | Part number | Surface | Colour | Box quantity |
|---|---|---|---|---|
| linkage AF/RB-A | TZZS0210-10001_ | Titan Silver | without | 1 pc |
| | TZZS0210-10004_ | Titan Silver | without | 25 pcs |

## Technical information

| Part number | Description | Dimensions (mm) | | | | |
|---|---|---|---|---|---|---|
| | | A | B | C | | |
| TVNL0060-... | short linkage RB 1RS | 225 | 70 | - | 1 | 5 |
| TVNL0050-... | short linkage RB 2RS | 625 | 70 | 400 | 2 | 11 |

- Also suitable for angled head windows up to a 45° angle
- The range of application conforms to the connecting components

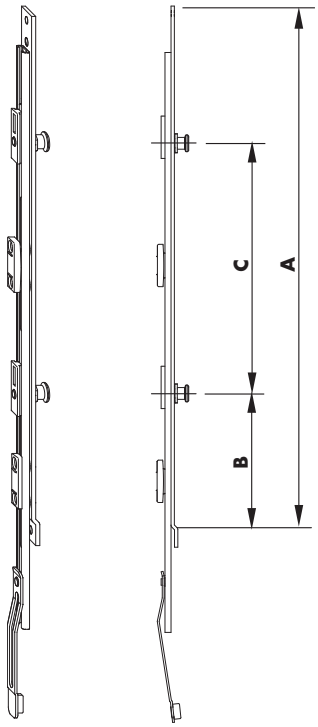


## Sales information

| Description | Part number | Surface | Colour | Box quantity |
|---|---|---|---|---|
| short linkage RB 1RS | TVNL0060-10001_ | Titan Silver | without | 1 pc |
| | TVNL0060-10004_ | Titan Silver | without | 25 pcs |
| short linkage RB 2RS | TVNL0050-10001_ | Titan Silver | without | 1 pc |
| | TVNL0050-10004_ | Titan Silver | without | 25 pcs |

## Technical information

| Part number | Description | Dimensions (mm) | | | |
|---|---|---|---|---|---|
| | | A | B | | |
| TZZS0160-... | linkage AF UE sz 1 1M | 200 | 95 | 1 | 2 |

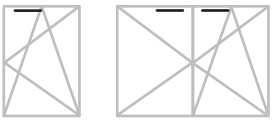

- With magnetic roller for electronic locking and opening monitoring AEROCONTROL (not suitable as a locking point)
- The range of application conforms to the connecting components

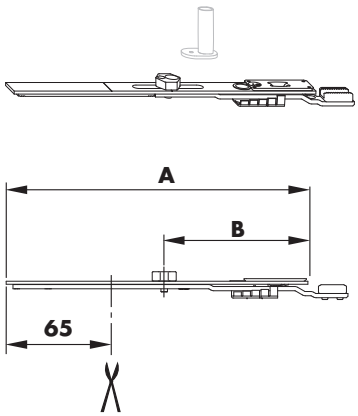


## Sales information

| Description | Part number | Surface | Colour | Box quantity |
|---|---|---|---|---|
| linkage AF UE sz 1 1M | TZZS0160-10001_ | Titan Silver | without | 1 pc |
| | TZZS0160-10004_ | Titan Silver | without | 25 pcs |

## Technical information

| Part number | Description | Dimensions (mm) | | | | |
|---|---|---|---|---|---|---|
| | | A | B | C | | |
| TZZS0250-... | linkage AF UE sz 1 1M 1RS | 200 | 158 | 95 | 2 | 3 |

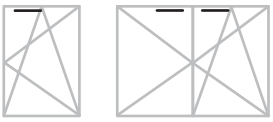

- With magnetic roller for electronic locking and opening monitoring AEROCONTROL.
- The range of application conforms to the connecting components
- Applicable up to RC3

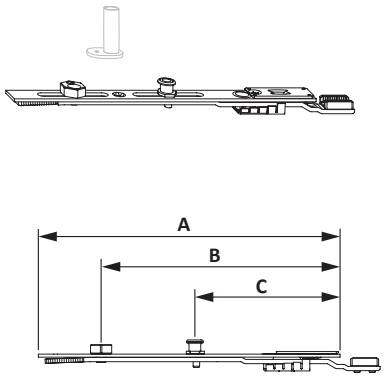


## Sales information

| Description | Part number | Surface | Colour | Box quantity |
|---|---|---|---|---|
| linkage AF UE sz 1 1M 1RS | TZZS0250-10001_ | Titan Silver | without | 1 pc |
| | TZZS0250-10004_ | Titan Silver | without | 25 pcs |

## Technical information

| Part number | Description | Dimensions (mm) | | | |
|---|---|---|---|---|---|
| | | A | B | | |
| TZUS1090-... | linkage US sz 1 1S A0273 | 429 | 340 | 1 | 2 |

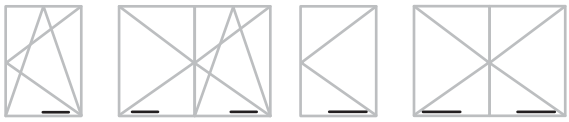

- With extended S-ES cam for thresholds with 10 mm airgap
- In conjunction with the tilt lock bearing SL-S FH, refer to the PDB
- The range of application conforms to the connecting components
- Component can be coupled

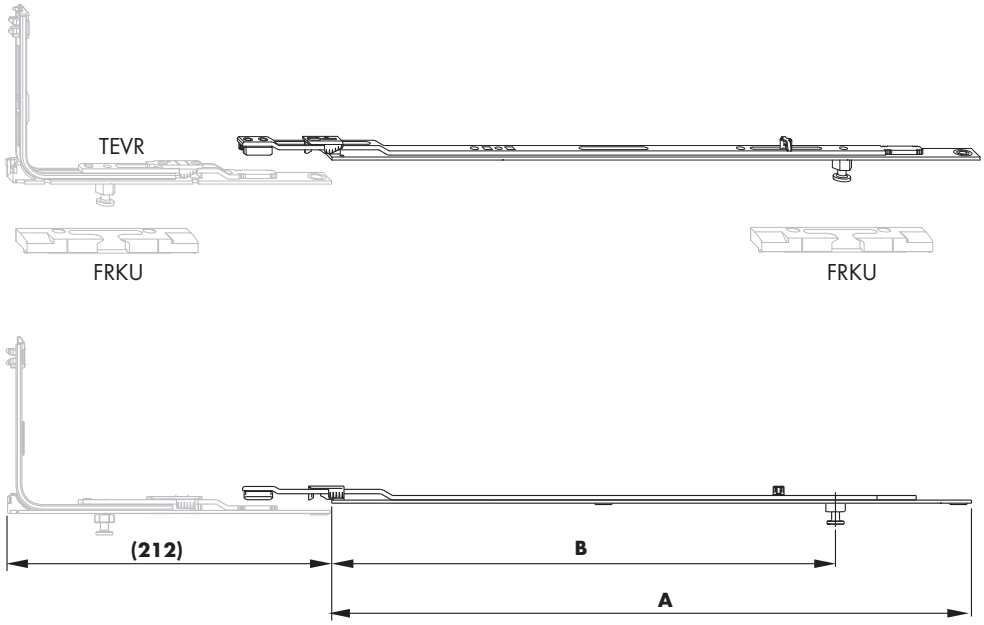


## Sales information

| Description | Part number | Surface | Colour | Box quantity |
|---|---|---|---|---|
| linkage US sz 1 1S A0273 | TZUS1090-10001_ | Titan Silver | without | 1 pc |
| | TZUS1090-10004_ | Titan Silver | without | 25 pcs |

## Technical information

| Part number | Description | Dimensions (mm) | | | |
|---|---|---|---|---|---|
| | | A | B | | |
| TZUS1110-... | linkage US sz.1 FH 1S A0273 | 429 | 340 | 1 | 2 |

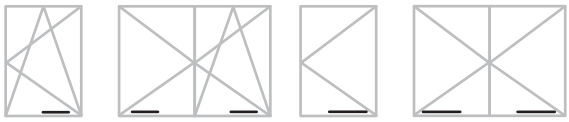

- With striker packer for TFFH sash lifter
- With extended S-ES cam for thresholds with 10 mm airgap
- In conjunction with the tilt lock bearing SL-S FH, refer to the PDB
- Bottom horizontal component cannot be coupled

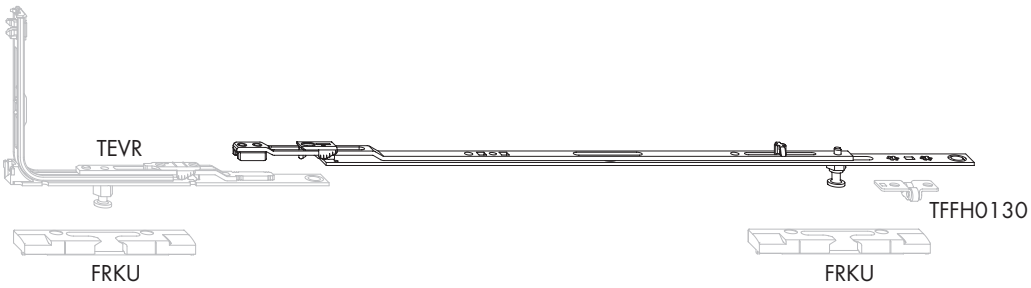


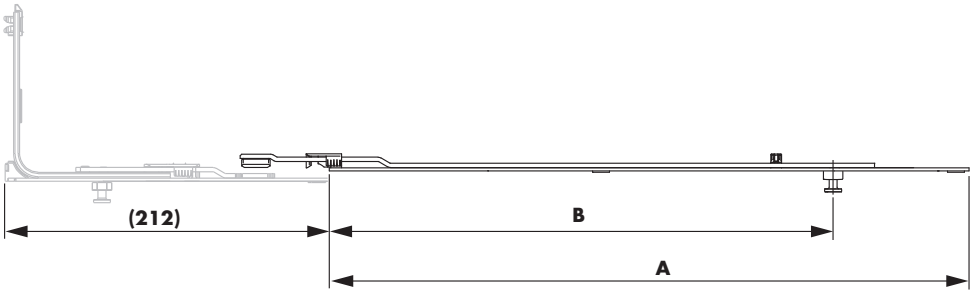


## Sales information

| Description | Part number | Surface | Colour | Box quantity |
|---|---|---|---|---|
| linkage US sz.1 FH 1S A0273 | TZUS1110-10001_ | Titan Silver | without | 1 pc |
| | TZUS1110-10004_ | Titan Silver | without | 25 pcs |

## Technical information

| Part number | Description | Dimensions (mm) | | | |
|---|---|---|---|---|---|
| | | A | B | | |
| TVSL0420-... | extension sz 2+ 1S A0273 | 143 | 98 | 1 | 2 |

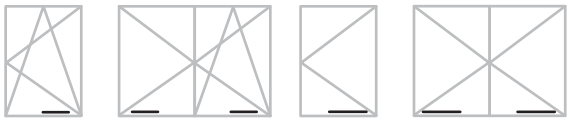

- With extended S-ES cam for thresholds with 10 mm airgap
- The range of application conforms to the connecting components

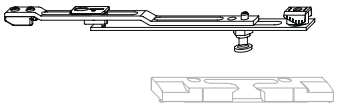

FRKU

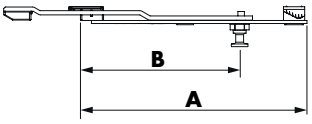


## Sales information

| Description | Part number | Surface | Colour | Box quantity |
|---|---|---|---|---|
| extension sz 2+ 1S A0273 | TVSL0420-10001_ | Titan Silver | without | 1 pc |
| | TVSL0420-10005_ | Titan Silver | without | 50 pcs |

## Technical information

| Part number | Description | Dimensions (mm) | | | |
|---|---|---|---|---|---|
| | | A | B | | |
| TZZS0200-... | linkage AF sz.1 1RS/A | 200 | 94 | 1 | 2 |

- The range of application conforms to the connecting components

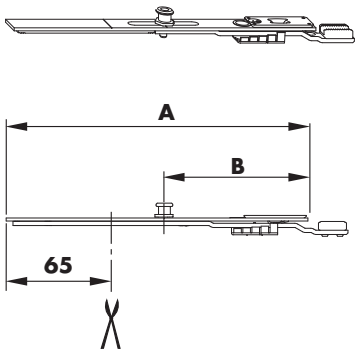




## Sales information

| Description | Part number | Surface | Colour | Box quantity |
|---|---|---|---|---|
| linkage AF sz.1 1RS/A | TZZS0200-10001_ | Titan Silver | without | 1 pc |
| | TZZS0200-10004_ | Titan Silver | without | 25 pcs |

## Technical information

| Part number | Description | Dimensions (mm) | | | | |
|---|---|---|---|---|---|---|
| | | A | B | C | | |
| TZZS0180-... | linkage AF sz 2 1RS/A | 400 | 95 | 200 | 1 | 3 |

- The range of application conforms to the connecting components

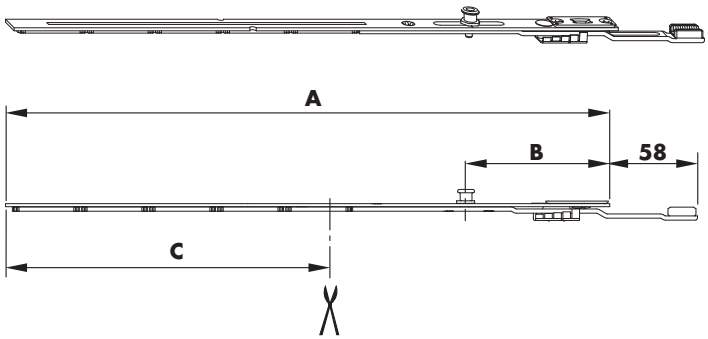


## Sales information

| Description | Part number | Surface | Colour | Box quantity |
|---|---|---|---|---|
| linkage AF sz 2 1RS/A | TZZS0180-10001_ | Titan Silver | without | 1 pc |
| | TZZS0180-10004_ | Titan Silver | without | 25 pcs |

## Technical information

| Part number | Description | Dimensions (mm) | | | | |
|---|---|---|---|---|---|---|
| | | A | B | C | | |
| TZZS0220-... | linkage AF sz 2 1V/A | 400 | 95 | 200 | 1 | 3 |

- The range of application conforms to the connecting components

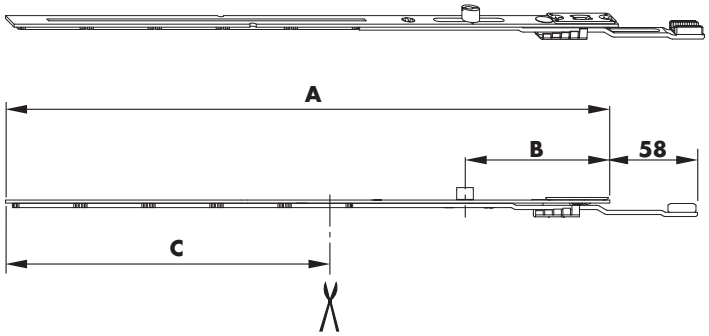




## Sales information

| Description | Part number | Surface | Colour | Box quantity |
|---|---|---|---|---|
| linkage AF sz 2 1V/A | TZZS0220-10001_ | Titan Silver | without | 1 pc |
| | TZZS0220-10004_ | Titan Silver | without | 25 pcs |

## Technical information

| Part number | Description | Dimensions (mm) | | | | |
|---|---|---|---|---|---|---|
| | | A | B | C | | |
| TZZZ0010-... | linkage AF ZZ | 650 | 325 | 200 | 1 | 1 |

- The range of application conforms to the connecting components

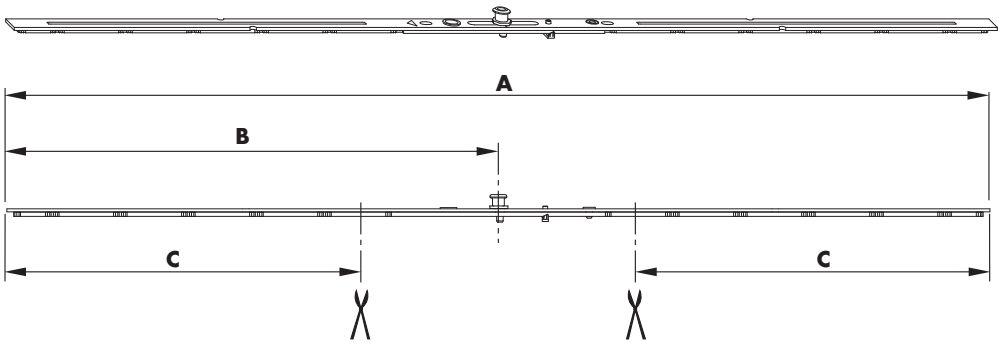


## Sales information

| Description | Part number | Surface | Colour | Box quantity |
|---|---|---|---|---|
| linkage AF ZZ | TZZZ0010-10001_ | Titan Silver | without | 1 pc |
| | TZZZ0010-10004_ | Titan Silver | without | 25 pcs |

## Technical information

| Part number | Description | Dimensions (mm) | | | | |
|---|---|---|---|---|---|---|
| | | A | B | C | | |
| TZZZ0030-... | linkage AF ZZ 1S A0273 | 650 | 325 | 200 | 1 | 1 |

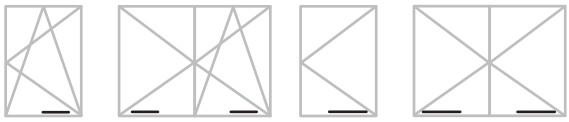

- With extended S-ES cam for thresholds with 10 mm airgap
- In conjunction with the tilt lock bearing SL-S FH, refer to the PDB
- The range of application conforms to the connecting components

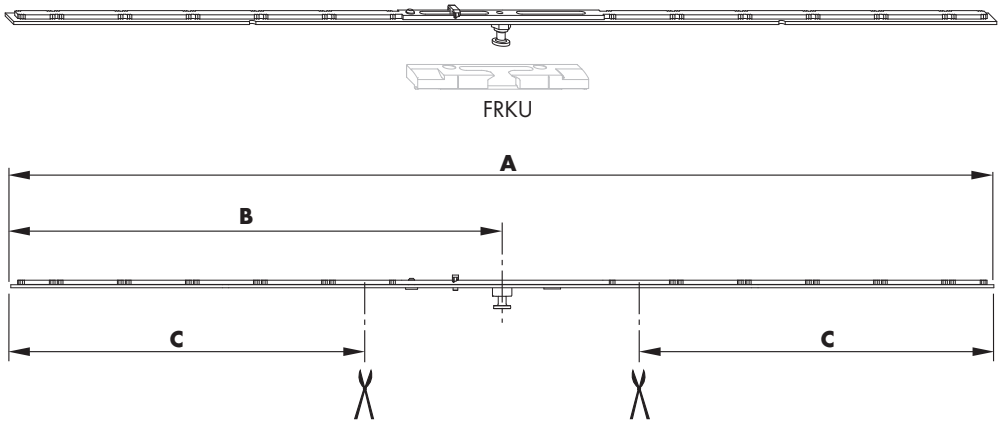


## Sales information

| Description | Part number | Surface | Colour | Box quantity |
|---|---|---|---|---|
| linkage AF ZZ 1S A0273 | TZZZ0030-10001_ | Titan Silver | without | 1 pc |
| | TZZZ0030-10004_ | Titan Silver | without | 25 pcs |

## Technical information

| Part number | Description | Dimensions (mm) | | | | |
|---|---|---|---|---|---|---|
| | | A | B | C | | |
| TZZZ0040-... | linkage FPS/ZZ 1RS | 971 | 325 | 406 | 1 | 5 |

- Can be used in combination with ASFP tilt-only safety stay
- For high tilt sashes with rebate heights from 800mm
- The range of application conforms to the connecting components

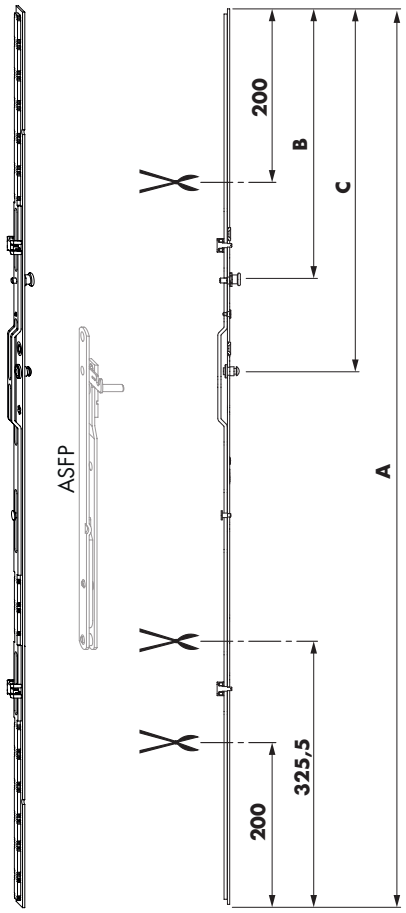


## Sales information

| Description | Part number | Surface | Colour | Box quantity |
|---|---|---|---|---|
| linkage FPS/ZZ 1RS | TZZZ0040-10001_ | Titan Silver | without | 1 pc |
| | TZZZ0040-10004_ | Titan Silver | without | 25 pcs |

| Description | Material | Page |
|---|---|---|
| stay AF | TSKK2000, TSKK2010, TSKK2020, TSKK2120, TSKK2030, TSKK2040 | 5 - 3 |
| stay AF TBT | TSKT2000, TSKT2010, TSKT2120, TSKT2030, TSKT2040 | 5 - 5 |
| stay AF SP | TSKL2011, TSKL2012, TSKL2021, TSKL2022, TSKL2031, TSKL2032, TSKL2041, TSKL2042 | 5 - 6 |
| additional stay AF | TSZS0010, TSZS0030, TSZS0020 | 5 - 8 |
| additional stay AF TBT | TSZS0010, TSZS0030, TSZS0020, TZOT1010 | 5 - 9 |
| comfort stay | TSZS0051, TSZS0052, TSZS0041, TSZS0042 | 5 - 10 |
| stay DF/MN | TSKD1010 | 5 - 12 |
| stay DF/ON | TSKD1020 | 5 - 13 |
| stay RB PVC | TSKR1000, TSKR1020, TSKR1050 | 5 - 14 |
| stay RB timber | TSKR0010, TSKR0020, TSKR0040, TSKR0050, TSKR0030 | 5 - 16 |
| crt.add. stay AF RB 1RS | TMZS1070 | 5 - 19 |
| stay iP/Z | TSZK0011, TSZK0012 | 5 - 21 |
| telescopic tilt only stay | TSKF0020, TFZB0060, TFZB0050, TFZB0070 | 5 - 22 |
| tilt only safety stay | ASFP0031, ASFP0032, ASFP0041, ASFP0042, ASFP0131, ASFP0132, ASFP0141, ASFP0142, ZFFP0010 | 5 - 23 |
| tilt only safety stay | ASFP0211, ASFP0212, ASFP0220, ASFP0230 | 5 - 25 |
| stay sash part AF | TSSK2050, TSSK2010, TSSK2020, TSSK2120, TSSK2030, TSSK2040 | 5 - 26 |
| stay sash part DF/A | TSSD1000, TSSD1010, TSSD1020, TSSD1120, TSSD1030, TSSD1040 | 5 - 28 |
| stay sash part DF/MN | TSSD0020 | 5 - 30 |
| stay sash part DF/ON | TSSD0030 | 5 - 31 |
| stay sash part DF/MN | TSSD0050 | 5 - 32 |
| stay sash part DF/MN Ø8 | TSSD0080 | 5 - 33 |
| stay arm | TSAK1000, TSAK1010, TSAK1020, TSAK1030 | 5 - 34 |

| Description | Material | Page |
|---|---|---|
| stay arm TBT | TSAT1000, TSAT1010, TSAT1020, TSAT1030 | 5 - 35 |
| stay arm DF | TSAD0010 | 5 - 36 |
| stay arm DF TITAN PVC | TSAB6020, TSAB6050, TSAB6060 | 5 - 37 |

## Technical information

| Part number | Description | FFB | Dimensions (mm) | | | | Airgap | sash weight | | |
|---|---|---|---|---|---|---|---|---|---|---|
| | | | A | B | C | D | | | | |
| TSKK2000-... | stay AF sz 0 | 230 - 450 | 405 | - | 225 | 75 | 12 | 100 kg | 0 | 2 |
| TSKK2010-... | stay AF sz 1 | 451 - 680 | 540 | - | 252 | 125 | 12 | 130 kg | 0 | 3 |
| TSKK2020-... | stay AF sz 2 | 681 - 850 | 740 | - | 202 | 140 | 12 | 150 kg | 0 | 4 |
| TSKK2120-... | stay AF sz 2 1RS | 681 - 850 | 740 | 456 | 202 | 140 | 12 | 150 kg | 1 | 4 |
| TSKK2030-... | stay AF sz 3 1RS | 851 - 1050 | 910 | 552 | 202 | 140 | 12 | 150 kg | 1 | 6 |
| TSKK2040-... | stay AF sz 4 1RS | 1051 - 1250 | 1110 | 552 | 202 | 140 | 12 | 150 kg | 1 | 7 |

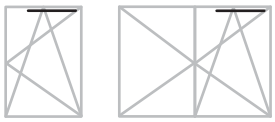

- Dimension D = opening width
- Please note:
  FFB 1251-1450 stay AF sz 3 with additional stay AF
  FFB 1451-1650 stay AF sz 4 with additional stay AF
- Also suitable for angled head windows up to RC1, max. angle 35°
- Integrated anti-slam device in the tilt position
- Mishandling-device in tilt-position

- **Please observe:**
  Guidelines/notes on the product and on liability (VHBH directive as well as the other applicable documents listed - directive can be downloaded at www.beschlagindustrie.de/ggsb/richtlinien.asp )
  Specifications from the profile manufacturers/system owners (PVC, light metal) or DIN 68 121 “Wooden profiles for windows and portal doors”

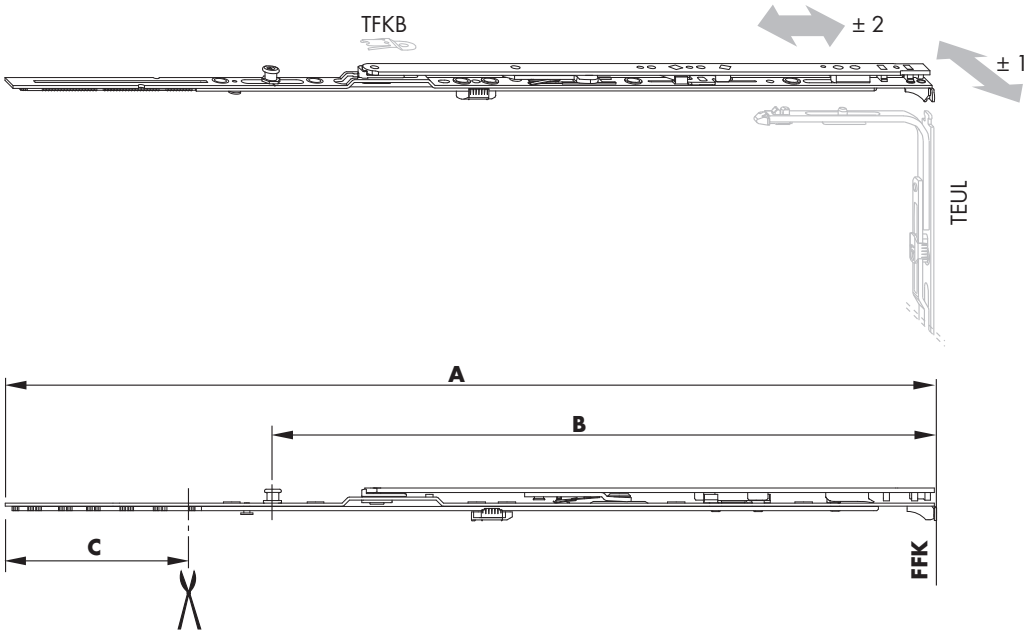

## Sales information

| Description | Part number | Surface | Colour | Box quantity |
|---|---|---|---|---|
| stay AF sz 0 | TSKK2000-10001_ | Titan Silver | without | 1 pc |
| | TSKK2000-10004_ | Titan Silver | without | 25 pcs |
| | TSKK2000-10029_ | Titan Silver | without | 1000 pcs |
| stay AF sz 1 | TSKK2010-10001_ | Titan Silver | without | 1 pc |
| | TSKK2010-10004_ | Titan Silver | without | 25 pcs |
| | TSKK2010-10027_ | Titan Silver | without | 800 pcs |
| stay AF sz 2 | TSKK2020-10001_ | Titan Silver | without | 1 pc |
| | TSKK2020-10004_ | Titan Silver | without | 25 pcs |
| | TSKK2020-10023_ | Titan Silver | without | 600 pcs |
| stay AF sz 2 1RS | TSKK2120-10001_ | Titan Silver | without | 1 pc |
| | TSKK2120-10004_ | Titan Silver | without | 25 pcs |
| stay AF sz 3 1RS | TSKK2030-10001_ | Titan Silver | without | 1 pc |
| | TSKK2030-10004_ | Titan Silver | without | 25 pcs |
| | TSKK2030-10022_ | Titan Silver | without | 400 pcs |
| stay AF sz 4 1RS | TSKK2040-10001_ | Titan Silver | without | 1 pc |
| | TSKK2040-10004_ | Titan Silver | without | 25 pcs |
| | TSKK2040-10022_ | Titan Silver | without | 400 pcs |

## Technical information

| Part number | Description | FFB | Dimensions (mm) | | sash weight |
|---|---|---|---|---|---|
| | | | A | B | |
| TSAT1000-... | stay arm TBT sz 0 | 230 - 450 | 167 | 80 | 100 kg |
| TSAT1010-... | stay arm TBT sz 1 | 451 - 680 | 252 | 140 | 130 kg |
| TSAT1020-... | stay arm TBT sz 2 | 681 - 850 | 378 | 140 | 130 kg |
| TSAT1030-... | stay arm TBT sz 3 | 851 - 1650 | 465 | 140 | 130 kg |

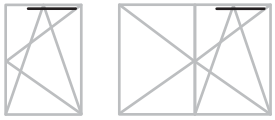

- Dimension B = opening width
- Sequence of operation: TILT before TURN
- Note:
  Use stay arm Gr.3 with stay sash part Gr.3 and Gr.4
- Integrated anti-slam device in the tilt position

- **Please observe:**
  Guidelines/notes on the product and on liability (VHBH directive as well as the other applicable documents listed - directive can be downloaded at www.beschlagindustrie.de/ggsb/richtlinien.asp )
  Specifications from the profile manufacturers/system owners (PVC, light metal) or DIN 68 121 “Wooden profiles for windows and portal doors”

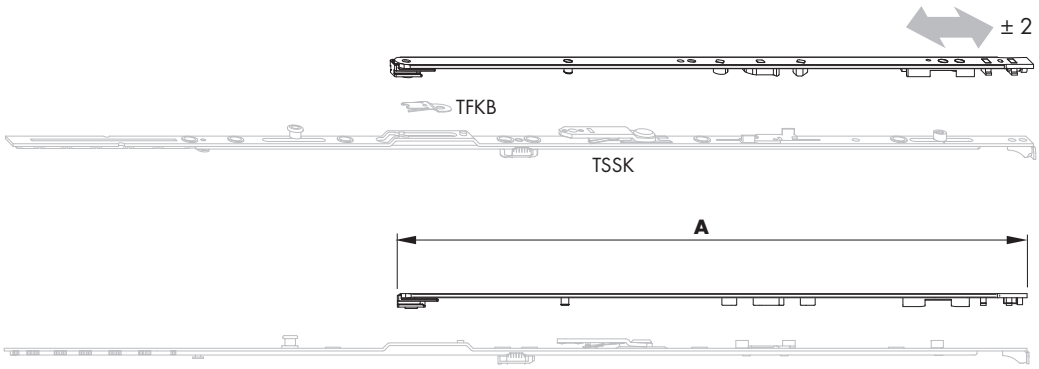


## Sales information

| Description | Part number | Surface | Colour | Box quantity |
|---|---|---|---|---|
| stay arm TBT sz 0 | TSAT1000-10001_ | Titan Silver | without | 1 pc |
| | TSAT1000-10004_ | Titan Silver | without | 25 pcs |
| stay arm TBT sz 1 | TSAT1010-10001_ | Titan Silver | without | 1 pc |
| | TSAT1010-10004_ | Titan Silver | without | 25 pcs |
| stay arm TBT sz 2 | TSAT1020-10001_ | Titan Silver | without | 1 pc |
| | TSAT1020-10004_ | Titan Silver | without | 25 pcs |
| stay arm TBT sz 3 | TSAT1030-10001_ | Titan Silver | without | 1 pc |
| | TSAT1030-10004_ | Titan Silver | without | 25 pcs |

## Technical information

| Part number | Description | FFB | Dimensions (mm) | | | Airgap | sash weight | | |
|---|---|---|---|---|---|---|---|---|---|
| | | | A | B | C | | | | |
| TSKL2011-... | stay AF SP sz 1 rh. | 451 - 680 | 540 | - | 250 | 12 | 130 kg | 0 | 3 |
| TSKL2012-... | stay AF SP sz 1 lh. | 451 - 680 | 540 | - | 250 | 12 | 130 kg | 0 | 3 |
| TSKL2021-... | stay AF SP sz 2 1RS rh. | 681 - 850 | 740 | 456 | 202 | 12 | 150 kg | 1 | 4 |
| TSKL2022-... | stay AF SP sz 2 1RS lh. | 681 - 850 | 740 | 456 | 202 | 12 | 150 kg | 1 | 4 |
| TSKL2031-... | stay AF SP sz 3 1RS rh. | 851 - 1050 | 910 | 552 | 202 | 12 | 150 kg | 1 | 6 |
| TSKL2032-... | stay AF SP sz 3 1RS lh. | 851 - 1050 | 910 | 552 | 202 | 12 | 150 kg | 1 | 6 |
| TSKL2041-... | stay AF SP sz 4 1RS rh. | 1051 - 1250 | 1110 | 552 | 202 | 12 | 150 kg | 1 | 7 |
| TSKL2042-... | stay AF SP sz 4 1RS lh. | 1051 - 1250 | 1110 | 552 | 202 | 12 | 150 kg | 1 | 7 |

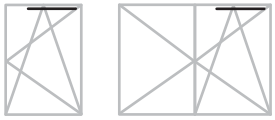

- Night vent
- Please note:
  FFB 1251-1450 stay AF sz 3 with additional stay AF
  FFB 1451-1650 stay AF sz 4 with additional stay AF
- Integrated anti-slam device in the tilt position
- Mishandling-device in tilt-position

- **Please observe:**
  Guidelines/notes on the product and on liability (VHBH directive as well as the other applicable documents listed - directive can be downloaded at www.beschlagindustrie.de/ggsb/richtlinien.asp )
  Specifications from the profile manufacturers/system owners (PVC, light metal) or DIN 68 121 “Wooden profiles for windows and portal doors”

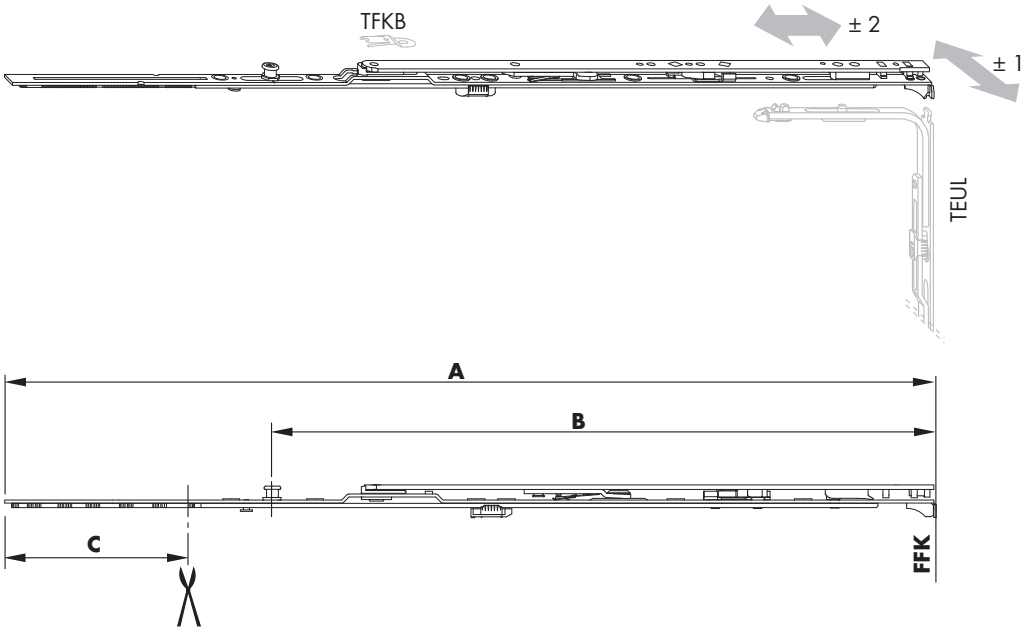

## Sales information

| Description | Part number | Surface | Colour | Box quantity |
|---|---|---|---|---|
| stay AF SP sz 1 rh. | TSKL2011-10001_ | Titan Silver | without | 1 pc |
| | TSKL2011-10004_ | Titan Silver | without | 25 pcs |
| stay AF SP sz 1 lh. | TSKL2012-10001_ | Titan Silver | without | 1 pc |
| | TSKL2012-10004_ | Titan Silver | without | 25 pcs |
| stay AF SP sz 2 1RS rh. | TSKL2021-10001_ | Titan Silver | without | 1 pc |
| | TSKL2021-10004_ | Titan Silver | without | 25 pcs |
| stay AF SP sz 2 1RS lh. | TSKL2022-10001_ | Titan Silver | without | 1 pc |
| | TSKL2022-10004_ | Titan Silver | without | 25 pcs |
| stay AF SP sz 3 1RS rh. | TSKL2031-10001_ | Titan Silver | without | 1 pc |
| | TSKL2031-10004_ | Titan Silver | without | 25 pcs |
| stay AF SP sz 3 1RS lh. | TSKL2032-10001_ | Titan Silver | without | 1 pc |
| | TSKL2032-10004_ | Titan Silver | without | 25 pcs |
| stay AF SP sz 4 1RS rh. | TSKL2041-10001_ | Titan Silver | without | 1 pc |
| | TSKL2041-10004_ | Titan Silver | without | 25 pcs |
| stay AF SP sz 4 1RS lh. | TSKL2042-10001_ | Titan Silver | without | 1 pc |
| | TSKL2042-10004_ | Titan Silver | without | 25 pcs |

## Technical information

| Part number | Description | Airgap | Groove axis | |
|---|---|---|---|---|
| TSZS0010-... | additional stay 18/9 | 12 | 9 | 3 |
| TSZS0030-... | additional stay 20/9 | 12 | 9 | 6 |
| TSZS0020-... | additional stay 26/13 | 12 | 13 | 3 |

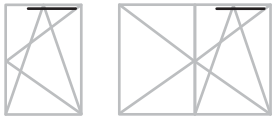

- under consideration of the appropriate application diagrams, a sash weight up to max. 150 kg is possible for timber elements
- Supply of additional stays including clamping spring TXKF
- Packer, refer to PDB line item FRUP01

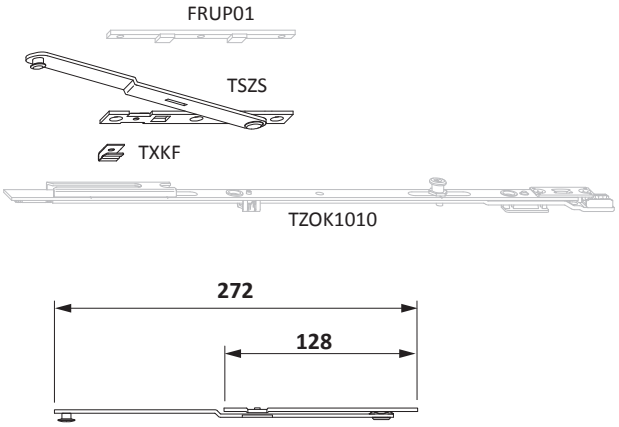




## Sales information

| Description | Part number | Surface | Colour | Box quantity |
|---|---|---|---|---|
| additional stay 18/9 | TSZS0010-10001_ | Titan Silver | without | 1 pc |
| | TSZS0010-10005_ | Titan Silver | without | 50 pcs |
| additional stay 20/9 | TSZS0030-10001_ | Titan Silver | without | 1 pc |
| | TSZS0030-10005_ | Titan Silver | without | 50 pcs |
| additional stay 26/13 | TSZS0020-10001_ | Titan Silver | without | 1 pc |
| | TSZS0020-10005_ | Titan Silver | without | 50 pcs |

## Technical information

| Part number | Description | FFB | Airgap | Groove axis | | |
|---|---|---|---|---|---|---|
| TSZS0010-... | additional stay 18/9 | - | 12 | 9 | - | 3 |
| TSZS0030-... | additional stay 20/9 | - | 12 | 9 | - | 6 |
| TSZS0020-... | additional stay 26/13 | - | 12 | 13 | - | 3 |
| TZOT1010-... | linkage add. stay AF TBT RS | 1251 - 1650 | - | - | 2 | 3 |

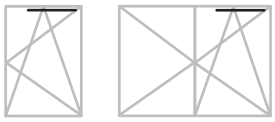

- under consideration of the appropriate application diagrams, a sash weight up to max. 150 kg is possible for timber elements
- Supply of additional stays including clamping spring TXKF
- Packer, refer to PDB line item FRUP01

- **Please observe:**
  Guidelines/notes on the product and on liability (VHBH directive as well as the other applicable documents listed - directive can be downloaded at www.beschlagindustrie.de/ggsb/richtlinien.asp )
  Specifications from the profile manufacturers/system owners (PVC, light metal) or DIN 68 121 “Wooden profiles for windows and portal doors”

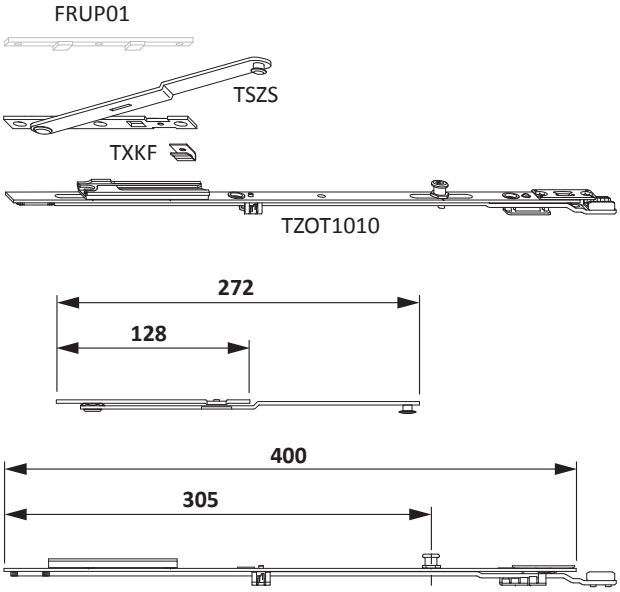


## Sales information

| Description | Part number | Surface | Colour | Box quantity |
|---|---|---|---|---|
| additional stay 18/9 | TSZS0010-10001_ | Titan Silver | without | 1 pc |
| | TSZS0010-10005_ | Titan Silver | without | 50 pcs |
| additional stay 20/9 | TSZS0030-10001_ | Titan Silver | without | 1 pc |
| | TSZS0030-10005_ | Titan Silver | without | 50 pcs |
| additional stay 26/13 | TSZS0020-10001_ | Titan Silver | without | 1 pc |
| | TSZS0020-10005_ | Titan Silver | without | 50 pcs |
| linkage add. stay AF TBT RS | TZOT1010-10001_ | Titan Silver | without | 1 pc |
| | TZOT1010-10004_ | Titan Silver | without | 25 pcs |

## Technical information

| Part number | Description | FFB | Dimensions (mm) | | Airgap | Groove axis | | |
|---|---|---|---|---|---|---|---|---|
| | | | A | B | | | | |
| TSZS0051-... | comfort stay sz 0 rh. | 900 - 1650 | - | - | 12 | 13 | - | 3 |
| TSZS0052-... | comfort stay sz 0 lh. | 900 - 1650 | - | - | 12 | 13 | - | 3 |
| TSZS0041-... | comfort stay sz 1 rh. | 900 - 1650 | - | - | 12 | 13 | - | 3 |
| TSZS0042-... | comfort stay sz 1 lh. | 900 - 1650 | - | - | 12 | 13 | - | 3 |
| TZOK1030-... | linkage additional stay sz 1 | 900 - 1250 | 200 | - | - | - | 1 | 2 |
| TZOK1010-... | linkage additional stay 1RS | 1251 - 1650 | 400 | 305 | - | - | 2 | 3 |

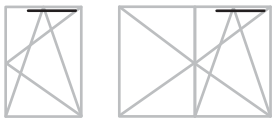

- Opening width = 140 mm
- If using the comfort stay a mishandling device must be put in.
- The airgap given above refers to $12^{+1}$ mm.
- Packer, refer to PDB line item FRUP01
- The assembly aid is included in the scope of delivery.
- Not suitable for TBT.
- Reduced effort when closing the sash from the tilt position.
- Reduced rocking when closing the sash from the tilt position.
- You can find a demonstration of the function and installation of the comfort stay here: https://youtu.be/L03qpm3w1Ac
- Check comfort stay after installation for function / clean engagement and adjust if necessary.

**⚠ CAUTION**

**The sash can close itself automatically, there is therefore a risk of trapping.**

With sash elements that are too light the comfort stay can pull the sash into the locked position.

- The usage recommendations must be adhered to!

- Usage recommendation for elements with room-side glass focal point:
  Comfort stay 0 for window formats of sash weight 50-70 kg and door formats of sash weight 70-100 kg
  Comfort stay 1 for window formats from sash weight 70 kg and door formats from sash weight 100 kg
  The usage recommendation is to be checked on a case-by-case basis!

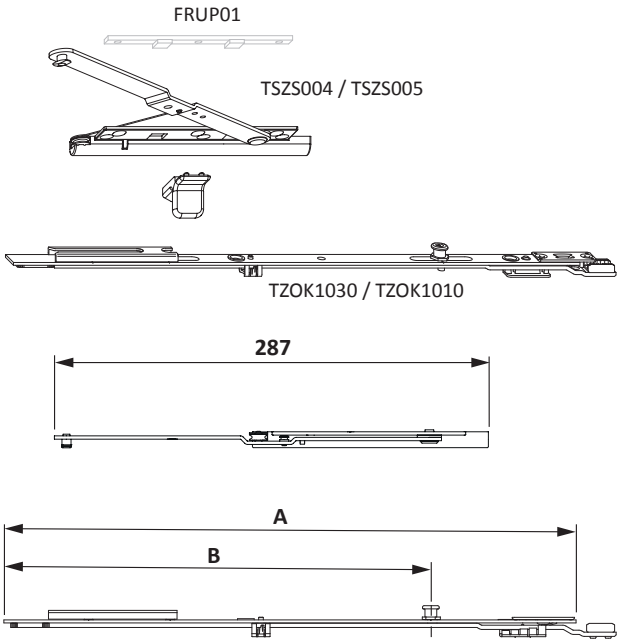

## Sales information

| Description | Part number | Surface | Colour | Box quantity |
|---|---|---|---|---|
| comfort stay sz 0 rh. | TSZS0051-10001_ | Titan Silver | without | 1 pc |
| | TSZS0051-10002_ | Titan Silver | without | 10 pcs |
| comfort stay sz 0 lh. | TSZS0052-10001_ | Titan Silver | without | 1 pc |
| | TSZS0052-10002_ | Titan Silver | without | 10 pcs |
| comfort stay sz 1 rh. | TSZS0041-10001_ | Titan Silver | without | 1 pc |
| | TSZS0041-10002_ | Titan Silver | without | 10 pcs |
| comfort stay sz 1 lh. | TSZS0042-10001_ | Titan Silver | without | 1 pc |
| | TSZS0042-10002_ | Titan Silver | without | 10 pcs |
| linkage additional stay sz 1 | TZOK1030-10001_ | Titan Silver | without | 1 pc |
| | TZOK1030-10004_ | Titan Silver | without | 25 pcs |
| linkage additional stay 1RS | TZOK1010-10001_ | Titan Silver | without | 1 pc |
| | TZOK1010-10004_ | Titan Silver | without | 25 pcs |

## Drill holes and routings

- Screw positions PVC

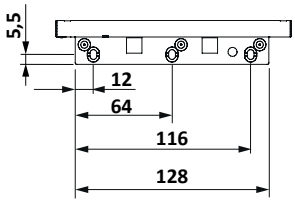


- Screw positions timber 12 mm

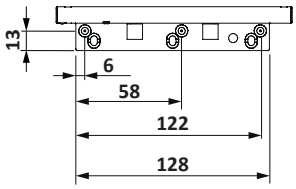

## Technical information

| Part number | Description | Dimensions (mm) A | Groove axis | sash weight | | |
|---|---|---|---|---|---|---|
| TSKD1010-... | stay DF/MN | 157 | 13/9 | 130 kg | 0 | 3 |

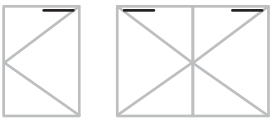

- **Please observe:**
  Guidelines/notes on the product and on liability (VHBH directive as well as the other applicable documents listed - directive can be downloaded at www.beschlagindustrie.de/ggsb/richtlinien.asp )
  Specifications from the profile manufacturers/system owners (PVC, light metal) or DIN 68 121 “Wooden profiles for windows and portal doors”
- under consideration of the appropriate application diagrams, a sash weight up to max. 150 kg is possible for timber elements

- **Please observe:**
  Guidelines/notes on the product and on liability (VHBH directive as well as the other applicable documents listed - directive can be downloaded at www.beschlagindustrie.de/ggsb/richtlinien.asp )
  Specifications from the profile manufacturers/system owners (PVC, light metal) or DIN 68 121 “Wooden profiles for windows and portal doors”

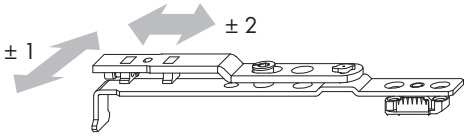


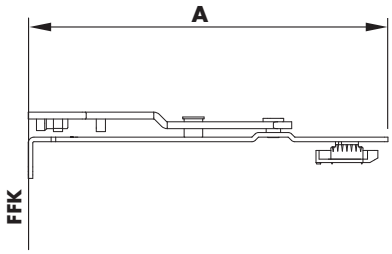


5

## Sales information

| Description | Part number | Surface | Colour | Box quantity |
|---|---|---|---|---|
| stay DF/MN | TSKD1010-10001_ | Titan Silver | without | 1 pc |
| | TSKD1010-10006_ | Titan Silver | without | 100 pcs |

## Technical information

| Part number | Description | Dimensions (mm) A | Groove axis | sash weight | | |
|---|---|---|---|---|---|---|
| TSKD1020-... | stay DF/ON | 157 | 13/9 | 130 kg | 0 | 3 |

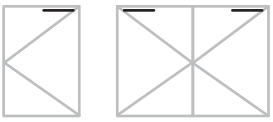

- For sashes without hardware groove
- The range of application conforms to the connecting components

- **Please observe:**
  Guidelines/notes on the product and on liability (VHBH directive as well as the other applicable documents listed - directive can be downloaded at www.beschlagindustrie.de/ggsb/richtlinien.asp )
  Specifications from the profile manufacturers/system owners (PVC, light metal) or DIN 68 121 “Wooden profiles for windows and portal doors”

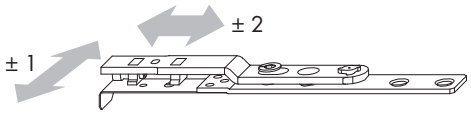


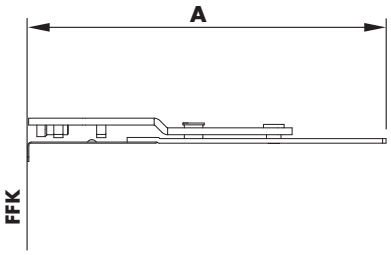


## Sales information

| Description | Part number | Surface | Colour | Box quantity |
|---|---|---|---|---|
| stay DF/ON | TSKD1020-10001_ | Titan Silver | without | 1 pc |
| | TSKD1020-10006_ | Titan Silver | without | 100 pcs |

## Technical information

| Part number | Description | FFH/AB | Dimensions (mm) | | Airgap | rebate width | Groove axis | sash weight | |
|---|---|---|---|---|---|---|---|---|---|
| | | | A | C | | | | | |
| TSKR1000-... | stay RB PVC 12/18-9 | 485 - 2150 | 596 | 56 | 12 | 18 | 9 | 80 kg | 6 |
| TSKR1020-... | stay RB PVC 12/20-9 | 485 - 2150 | 596 | 56 | 12 | 20 | 9 | 80 kg | 6 |
| TSKR1050-... | stay RB PVC 12/20-13 | 485 - 2150 | 596 | 56 | 12 | 20 | 13 | 80 kg | 6 |

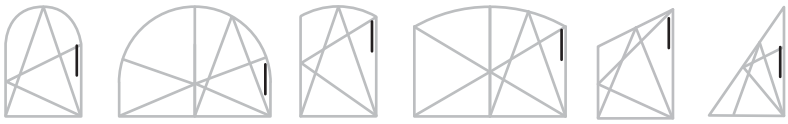

- Dimension C = Marking for the start of the arch
- Cover caps – see bag FAVORIT-RB (pivot point components)
- Also suitable for angled head windows up to a 45° angle

- **Please observe:**
  Guidelines/notes on the product and on liability (VHBH directive as well as the other applicable documents listed - directive can be downloaded at www.beschlagindustrie.de/ggsb/richtlinien.asp )
  Specifications from the profile manufacturers/system owners (PVC, light metal) or DIN 68 121 “Wooden profiles for windows and portal doors”

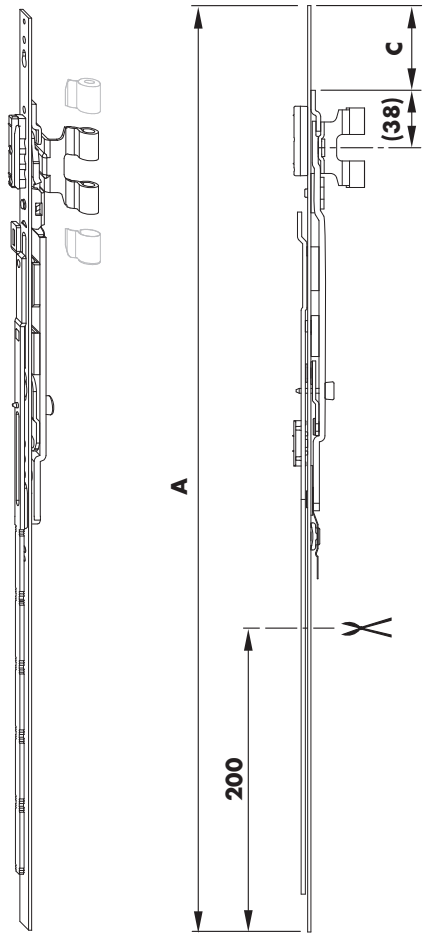

## Sales information

| Description | Part number | Surface | Colour | Box quantity |
|---|---|---|---|---|
| stay RB PVC 12/18-9 | TSKR1000-10001_ | Titan Silver | without | 1 pc |
| | TSKR1000-10004_ | Titan Silver | without | 25 pcs |
| stay RB PVC 12/20-9 | TSKR1020-10001_ | Titan Silver | without | 1 pc |
| | TSKR1020-10004_ | Titan Silver | without | 25 pcs |
| stay RB PVC 12/20-13 | TSKR1050-10001_ | Titan Silver | without | 1 pc |
| | TSKR1050-10004_ | Titan Silver | without | 25 pcs |
| | TSKR1050-1H404_ | Titan Silver | F9 titan m dark | 25 pcs |

## Installation advice

- Converting the stay RB from DIN right to DIN left
  1. Remove the fixing.
  2. Push the drive rod upwards.
  3. Swivel the stay arm into the tilt-position.
  4. Loosen the screw (approx. 2 full turns) on the supporting piece.
  5. Rotate the supporting piece 180°.
  6. Retighten the screw on the supporting piece.
  7. Swivel the stay arm over to the other side.
  8. Rotate the stay hinge 180°.
  9. Close the stay arm and remount the fixing bolt.

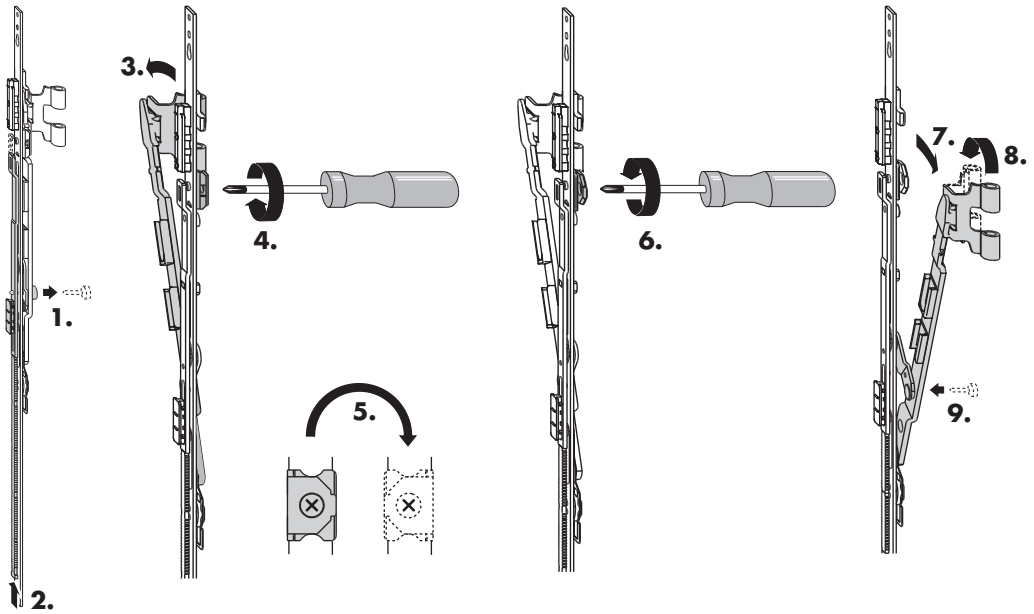


- Cropping situation TITAN AF

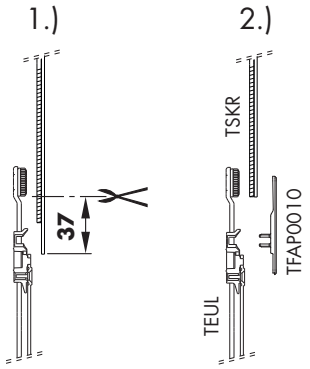

## Technical information

| Part number | Description | Airgap | rebate width | Groove axis | sash weight | |
|---|---|---|---|---|---|---|
| TSKR0020-... | stay RB timber 12/18-9 | 12 | 18 | 9 | 80 kg | 6 |
| TSKR0020-... | stay RB timber 12/18-9 | 12 | 18 | 9 | 80 kg | 6 |
| TSKR0040-... | stay RB timber 12/18-13 | 12 | 18 | 13 | 80 kg | 6 |
| TSKR0040-... | stay RB timber 12/18-13 | 12 | 18 | 13 | 80 kg | 6 |
| TSKR0030-... | stay RB timber 12/20-13 | 12 | 20 | 13 | 80 kg | 6 |
| TSKR0030-... | stay RB timber 12/20-13 | 12 | 20 | 13 | 80 kg | 6 |

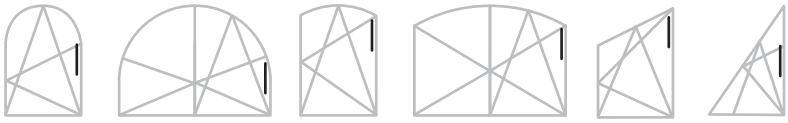

- Dimension C = Marking for the start of the arch
- Cover caps – see bag FAVORIT-RB (pivot point components)
- Also suitable for angled head windows up to a 45° angle

- **Please observe:**
  Guidelines/notes on the product and on liability (VHBH directive as well as the other applicable documents listed - directive can be downloaded at www.beschlagindustrie.de/ggsb/richtlinien.asp )
  Specifications from the profile manufacturers/system owners (PVC, light metal) or DIN 68 121 “Wooden profiles for windows and portal doors”

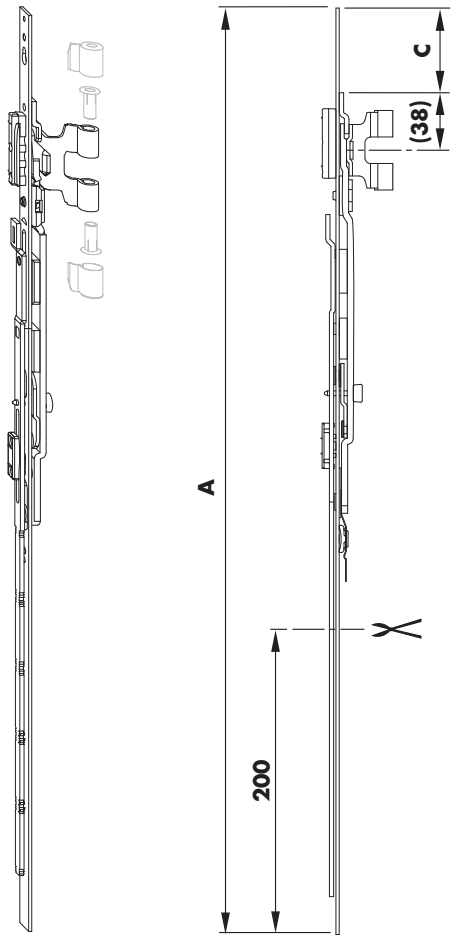

## Sales information

| Description | Part number | Surface | Colour | Box quantity |
|---|---|---|---|---|
| stay RB timber 12/18-9 | TSKR0020-10004_ | Titan Silver | without | 25 pcs |
| stay RB timber 12/18-9 | TSKR0020-10001_ | Titan Silver | without | 25 pcs |
| stay RB timber 12/18-13 | TSKR0040-10004_ | Titan Silver | without | 25 pcs |
| stay RB timber 12/18-13 | TSKR0040-10001_ | Titan Silver | without | 25 pcs |
| stay RB timber 12/20-13 | TSKR0030-10004_ | Titan Silver | without | 25 pcs |
| stay RB timber 12/20-13 | TSKR0030-10001_ | Titan Silver | without | 25 pcs |

## Drill holes and routings

- Timber 4 mm
  A = Marking for the start of the arch
  Spacer disc Ø 27 mm
  Miller Ø 16 mm
  Timber route depth 18 mm

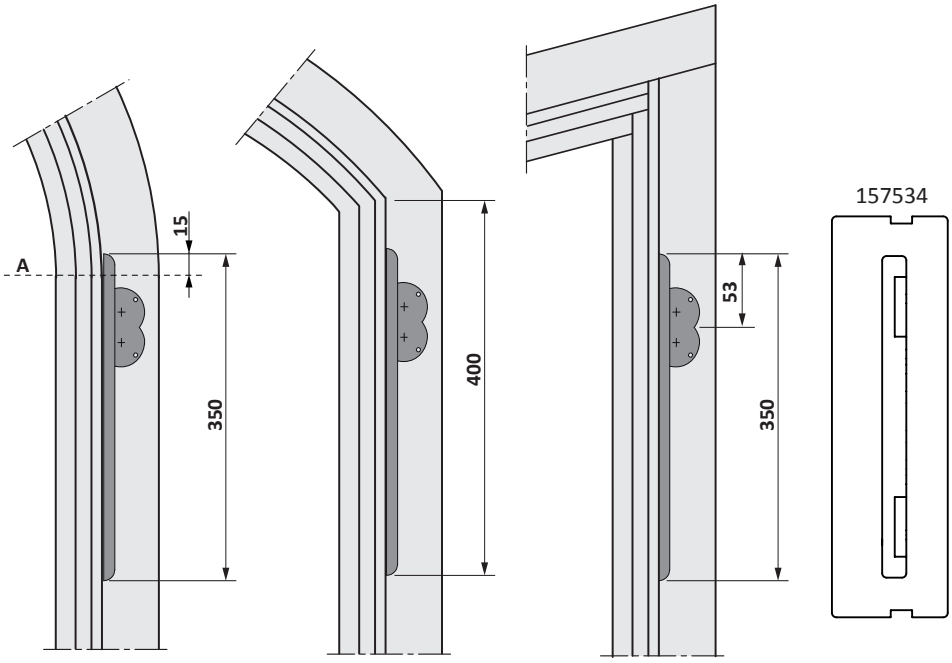

## Installation advice

- Converting the stay RB from DIN right to DIN left
  1. Remove the fixing.
  2. Push the drive rod upwards.
  3. Swivel the stay arm into the tilt-position.
  4. Loosen the screw (approx. 2 full turns) on the supporting piece.
  5. Rotate the supporting piece 180°.
  6. Retighten the screw on the supporting piece.
  7. Swivel the stay arm over to the other side.
  8. Rotate the stay hinge 180°.
  9. Close the stay arm and remount the fixing bolt.

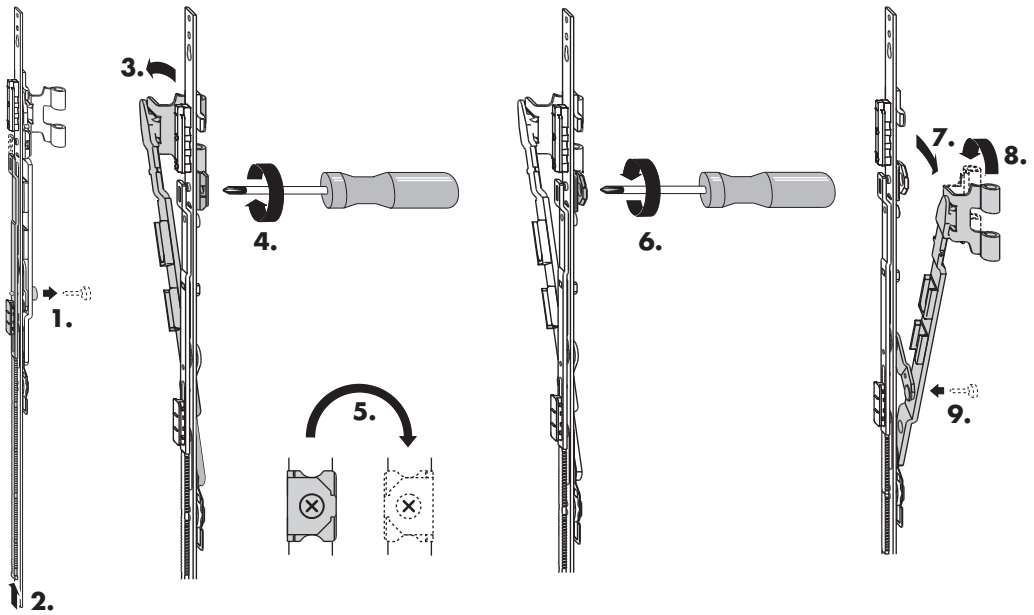


- Cropping situation TITAN AF

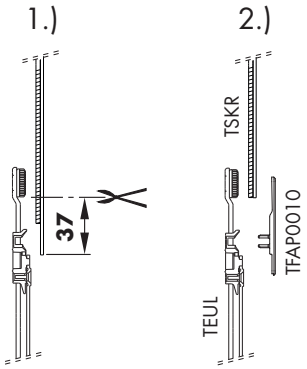

## Technical information

| Part number | Description | Airgap |
|---|---|---|
| TMZS1070-... | crt. add. stay AF/RB 1RS | 12 |

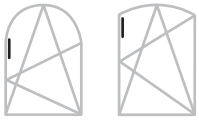

- The range of application conforms to the connecting components
- Packer refer to PDB line item FRUP02

- **Please observe:**
  Guidelines/notes on the product and on liability (VHBH directive as well as the other applicable documents listed - directive can be downloaded at www.beschlagindustrie.de/ggsb/richtlinien.asp )
  Specifications from the profile manufacturers/system owners (PVC, light metal) or DIN 68 121 “Wooden profiles for windows and portal doors”

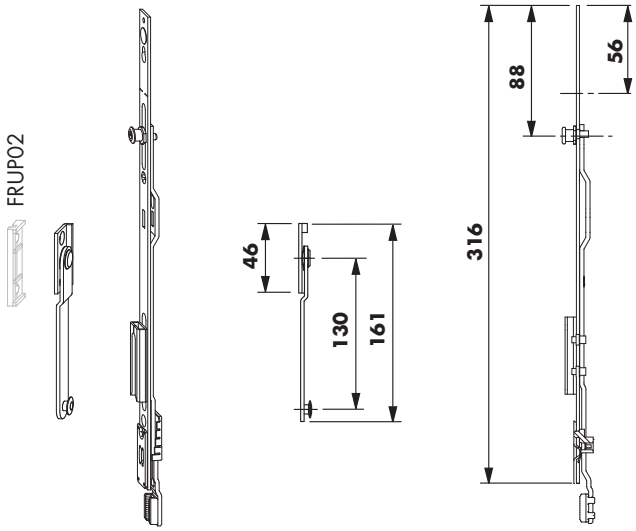


## Sales information

| Description | Part number | Surface | Colour | Box quantity |
|---|---|---|---|---|
| crt. add. stay AF/RB 1RS | TMZS1070-10004_ | Titan Silver | without | 25 pcs |

## Drill holes and routings

- Timber 4 mm
  A = Marking for the start of the arch
  Spacer disc Ø 27 mm
  Miller Ø 16 mm
  Timber route depth 18 mm

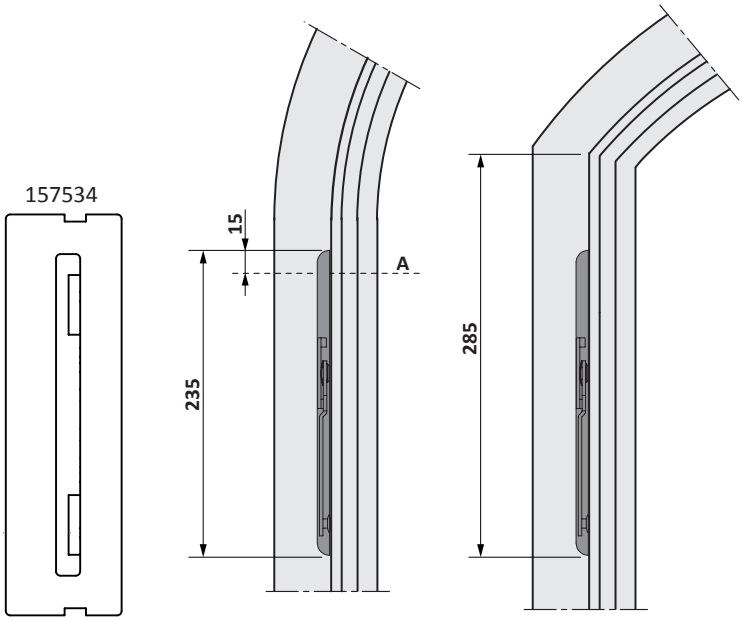

## Technical information

| Part number | Description | Dimensions (mm) A | Airgap | sash weight | | |
|---|---|---|---|---|---|---|
| TSZK0011-... | stay iP/Z rh. | 654 | 12 | 80 kg | 0 | 3 |
| TSZK0012-... | stay iP/Z lh. | 654 | 12 | 80 kg | 0 | 3 |

- The handle driven stay enables a lever to be positioned at the bottom horizontally on the sash (ergonomically ideal). The sash is tilted and closed without applying manual pressure.
- Projecting depth of 90-100 mm
- When using in TITAN AF, the stay must be shortened by 30 mm
- To prevent drive flexing at the connecting joint use fixing plate A0204 - Material No. 721902
- Only use in hardware solutions that connect all around
- **Please observe:**
  Guidelines/notes on the product and on liability (VHBH directive as well as the other applicable documents listed - directive can be downloaded at www.beschlagindustrie.de/ggsb/richtlinien.asp )
  Specifications from the profile manufacturers/system owners (PVC, light metal) or DIN 68 121 “Wooden profiles for windows and portal doors”

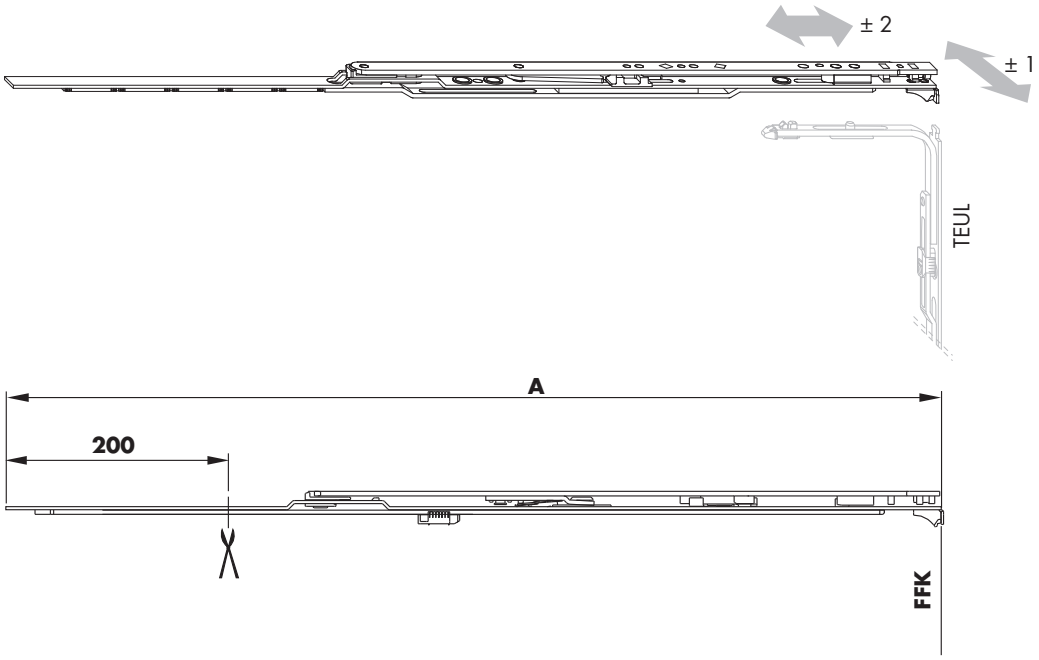


## Sales information

| Description | Part number | Surface | Colour | Box quantity |
|---|---|---|---|---|
| stay iP/Z rh. | TSZK0011-10001_ | Titan Silver | without | 1 pc |
| | TSZK0011-10002_ | Titan Silver | without | 10 pcs |
| stay iP/Z lh. | TSZK0012-10001_ | Titan Silver | without | 1 pc |
| | TSZK0012-10002_ | Titan Silver | without | 10 pcs |

## Technical information

| Part number | Description | sash weight | | |
|---|---|---|---|---|
| TSKF0020-... | telescopic tilt only stay (2) | 50 kg | 0 | 2 |
| TFZB0060-... | lock.bolt for flat faceplates .. | - | - | - |
| TFZB0050-... | lock.bolt f.rais.ring facepl. .. | - | - | - |
| TFZB0070-... | lock.bolt+screw f.flat facepl. .. | - | - | - |

- Minimum component length 110 mm due to telescope arm
- The tilt movement is slowed down
- Packer refer to PDB line item FRUP02
- the Locking bolt must be fixed with a longer screw (min. 4.8x38) for sash weights of up to max. 80 kg
- For sash weights up to max. 80 kg see "80 kg tilt sash" assembly instructions

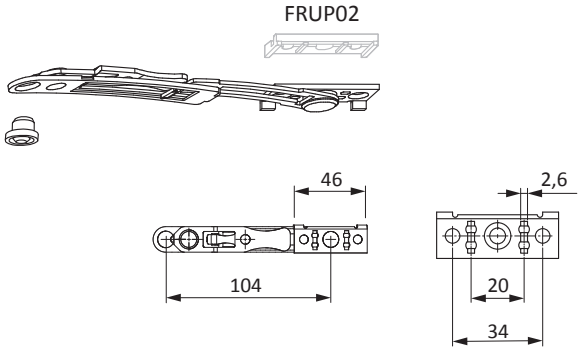




## Sales information

| Description | Part number | Surface | Colour | Box quantity |
|---|---|---|---|---|
| telescopic tilt only stay (2) | TSKF0020-10001_ | Titan Silver | without | 1 pc |
| | TSKF0020-10006_ | Titan Silver | without | 100 pcs |
| lock.bolt for flat faceplates .. | TFZB0060-10001_ | Titan Silver | without | 1 pc |
| | TFZB0060-10006_ | Titan Silver | without | 100 pcs |
| lock.bolt f.rais.ring facepl. .. | TFZB0050-10001_ | Titan Silver | without | 1 pc |
| | TFZB0050-10006_ | Titan Silver | without | 100 pcs |
| lock.bolt+screw f.flat facepl. .. | TFZB0070-10006_ | Titan Silver | without | 100 pcs |

## Technical information

| Part number | Description | FFH | Dimensions (mm) | | sash weight | |
|---|---|---|---|---|---|---|
| | | | A | B | | |
| ASFP0031-... | tilt only safety stay 25 sz.1 rh. | 350 - 500 | 163 | 25 | 50 kg | 2 |
| ASFP0032-... | tilt only safety stay 25 sz.1 lh. | 350 - 500 | 163 | 25 | 50 kg | 2 |
| ASFP0041-... | tilt only safety stay 25 sz.2 rh. | 501 - 800 | 258 | 25 | 50 kg | 2 |
| ASFP0042-... | tilt only safety stay 25 sz.2 lh. | 501 - 800 | 258 | 25 | 50 kg | 2 |
| ASFP0131-... | tilt only safety stay 13 sz.1 rh. | 350 - 500 | 163 | 13 | 50 kg | 2 |
| ASFP0132-... | tilt only safety stay 13 sz.1 lh. | 350 - 500 | 163 | 13 | 50 kg | 2 |
| ASFP0141-... | tilt only safety stay 13 sz.2 rh. | 501 - 800 | 258 | 13 | 50 kg | 4 |
| ASFP0142-... | tilt only safety stay 13 sz.2 lh. | 501 - 800 | 258 | 13 | 50 kg | 4 |
| ZFFP0010-... | fixing claw | - | - | - | 50 kg | 2 |

- Packer refer to PDB line item FRUP02
- Always use two tilt only safety stays per tilt sash
- For sash weights up to max. 80 kg see "80 kg tilt sash" assembly instructions

- **Please observe:**
  Guidelines/notes on the product and on liability (VHBH directive as well as the other applicable documents listed - directive can be downloaded at www.beschlagindustrie.de/ggsb/richtlinien.asp )
  Specifications from the profile manufacturers/system owners (PVC, light metal) or DIN 68 121 “Wooden profiles for windows and portal doors”

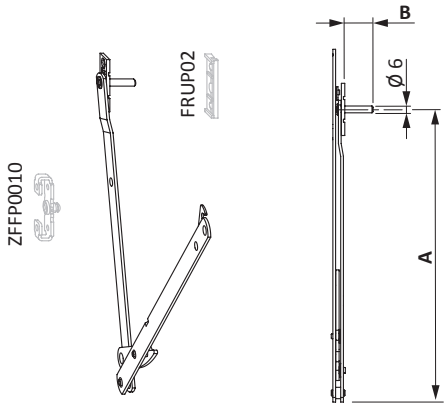

## Sales information

| Description | Part number | Surface | Colour | Box quantity |
|---|---|---|---|---|
| tilt only safety stay 25 sz.1 rh. | ASFP0031-10001_ | Titan Silver | without | 1 pc |
| | ASFP0031-10002_ | Titan Silver | without | 10 pcs |
| tilt only safety stay 25 sz.1 lh. | ASFP0032-10001_ | Titan Silver | without | 1 pc |
| | ASFP0032-10002_ | Titan Silver | without | 10 pcs |
| tilt only safety stay 25 sz.2 rh. | ASFP0041-10001_ | Titan Silver | without | 1 pc |
| | ASFP0041-10002_ | Titan Silver | without | 10 pcs |
| tilt only safety stay 25 sz.2 lh. | ASFP0042-10001_ | Titan Silver | without | 1 pc |
| | ASFP0042-10002_ | Titan Silver | without | 10 pcs |
| tilt only safety stay 13 sz.1 rh. | ASFP0131-10001_ | Titan Silver | without | 1 pc |
| | ASFP0131-10002_ | Titan Silver | without | 10 pcs |
| tilt only safety stay 13 sz.1 lh. | ASFP0132-10001_ | Titan Silver | without | 1 pc |
| | ASFP0132-10002_ | Titan Silver | without | 10 pcs |
| tilt only safety stay 13 sz.2 rh. | ASFP0141-10001_ | Titan Silver | without | 1 pc |
| | ASFP0141-10002_ | Titan Silver | without | 10 pcs |
| tilt only safety stay 13 sz.2 lh. | ASFP0142-10001_ | Titan Silver | without | 1 pc |
| | ASFP0142-10002_ | Titan Silver | without | 10 pcs |
| fixing claw | ZFFP0010-10001_ | Titan Silver | without | 1 pc |
| | ZFFP0010-10002_ | Titan Silver | without | 10 pcs |

## Technical information

| Part number | Description | FFH | Dimensions (mm)<br>A | sash weight |
|---|---|---|---|---|
| ASFP0211-... | tilt only safety stay sz 1 rh. | 250 - 350 | 123 | 50 kg |
| ASFP0212-... | tilt only safety stay sz 1 lh. | 250 - 350 | 123 | 50 kg |
| ASFP0220-... | tilt only safety stay sz 2 | 351 - 450 | 216 | 50 kg |
| ASFP0230-... | tilt only safety stay sz 3 | 451 - 800 | 311 | 50 kg |

- Always insert two security stays per tilt sash
- For sash weights up to max. 80 kg see "80 kg tilt sash" assembly instructions

- **Please observe:**
  Guidelines/notes on the product and on liability (VHBH directive as well as the other applicable documents listed - directive can be downloaded at www.beschlagindustrie.de/ggsb/richtlinien.asp )
  Specifications from the profile manufacturers/system owners (PVC, light metal) or DIN 68 121 “Wooden profiles for windows and portal doors”

TEUL4160

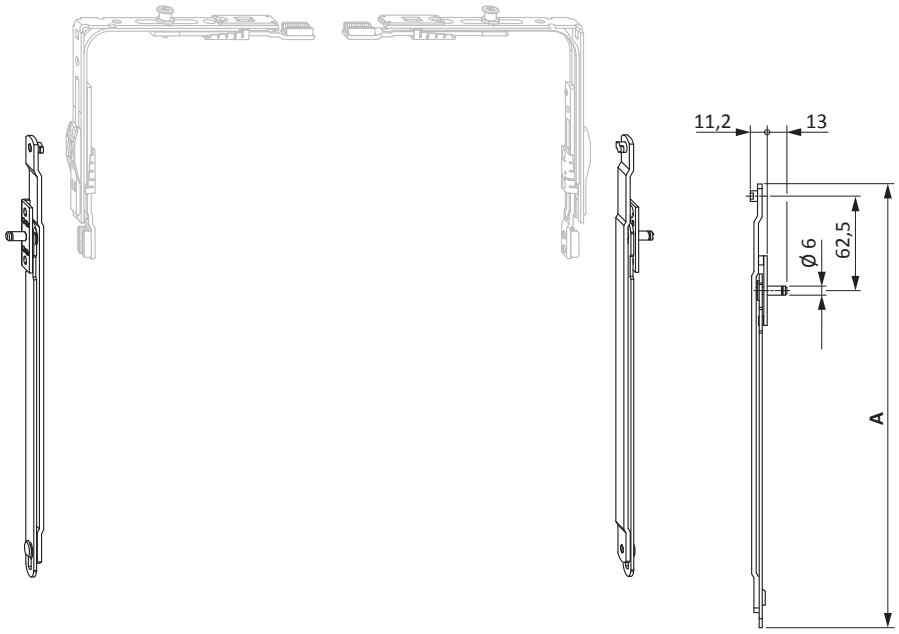


## Sales information

| Description | Part number | Surface | Colour | Box quantity |
|---|---|---|---|---|
| tilt only safety stay sz 1 rh. | ASFP0211-10001_ | Titan Silver | without | 1 pc |
| | ASFP0211-10004_ | Titan Silver | without | 25 pcs |
| tilt only safety stay sz 1 lh. | ASFP0212-10001_ | Titan Silver | without | 1 pc |
| | ASFP0212-10004_ | Titan Silver | without | 25 pcs |
| tilt only safety stay sz 2 | ASFP0220-10001_ | Titan Silver | without | 1 pc |
| | ASFP0220-10005_ | Titan Silver | without | 50 pcs |
| tilt only safety stay sz 3 | ASFP0230-10001_ | Titan Silver | without | 1 pc |
| | ASFP0230-10005_ | Titan Silver | without | 50 pcs |

## Technical information

| Part number | Description | FFB | Dimensions (mm) | | | Airgap | sash weight | | |
|---|---|---|---|---|---|---|---|---|---|
| | | | A | B | C | | | | |
| TSSK2050-... | stay sash part AF sz 0 | 230 - 450 | 405 | - | 225 | 12 | 100 kg | 0 | 2 |
| TSSK2010-... | stay sash part AF sz 1 | 451 - 680 | 540 | - | 252 | 12 | 130 kg | 0 | 3 |
| TSSK2020-... | stay sash part AF sz 2 | 681 - 850 | 740 | - | 202 | 12 | 130 kg | 0 | 4 |
| TSSK2120-... | stay sash part AF sz 2 1RS | 681 - 850 | 740 | 456 | 202 | 12 | 130 kg | 1 | 4 |
| TSSK2030-... | stay sash part AF sz 3 1RS | 851 - 1050 | 910 | 552 | 202 | 12 | 130 kg | 1 | 6 |
| TSSK2040-... | stay sash part AF sz 4 1RS | 1051 - 1250 | 1110 | 552 | 202 | 12 | 130 kg | 1 | 7 |

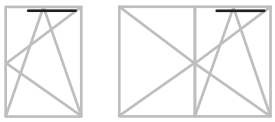

- Please note:
  FFB 1251-1450 stay sash part AF Gr. 3 with additional stay AF
  FFB 1451-1650 stay sash part AF Gr. 4 with additional stay AF
- Also suitable for angled head windows up to RC1, max. angle 35°
- Mishandling-device in tilt-position
- under consideration of the appropriate application diagrams, a sash weight up to max. 150 kg is possible for timber elements
- **Please observe:**
  Guidelines/notes on the product and on liability (VHBH directive as well as the other applicable documents listed - directive can be downloaded at www.beschlagindustrie.de/ggsb/richtlinien.asp )
  Specifications from the profile manufacturers/system owners (PVC, light metal) or DIN 68 121 “Wooden profiles for windows and portal doors”

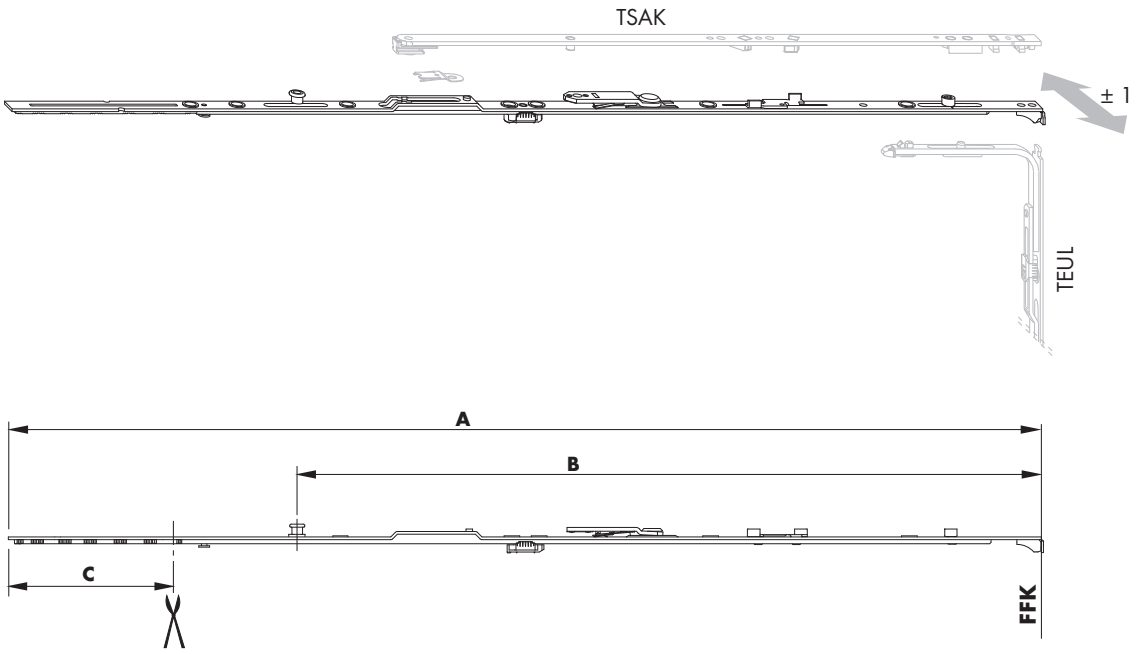

## Sales information

| Description | Part number | Surface | Colour | Box quantity |
|---|---|---|---|---|
| stay sash part AF sz 0 | TSSK2050-10001_ | Titan Silver | without | 1 pc |
| | TSSK2050-10004_ | Titan Silver | without | 25 pcs |
| stay sash part AF sz 1 | TSSK2010-10001_ | Titan Silver | without | 1 pc |
| | TSSK2010-10004_ | Titan Silver | without | 25 pcs |
| stay sash part AF sz 2 | TSSK2020-10001_ | Titan Silver | without | 1 pc |
| | TSSK2020-10004_ | Titan Silver | without | 25 pcs |
| stay sash part AF sz 2 1RS | TSSK2120-10001_ | Titan Silver | without | 1 pc |
| | TSSK2120-10004_ | Titan Silver | without | 25 pcs |
| stay sash part AF sz 3 1RS | TSSK2030-10001_ | Titan Silver | without | 1 pc |
| | TSSK2030-10004_ | Titan Silver | without | 25 pcs |
| stay sash part AF sz 4 1RS | TSSK2040-10001_ | Titan Silver | without | 1 pc |
| | TSSK2040-10004_ | Titan Silver | without | 25 pcs |

## Technical information

| Part number | Description | FFB | Dimensions (mm) | | | Airgap | sash weight | | |
|---|---|---|---|---|---|---|---|---|---|
| | | | A | B | C | | | | |
| TSSD1000-... | stay sash part DF/A sz 0 | 230 - 450 | 405 | - | 225 | 12 | 130 kg | 0 | 2 |
| TSSD1010-... | stay sash part DF/A sz 1 | 451 - 680 | 540 | - | 200 | 12 | 130 kg | 0 | 3 |
| TSSD1020-... | stay sash part DF/A sz 2 | 681 - 850 | 740 | - | 200 | 12 | 130 kg | 0 | 4 |
| TSSD1120-... | stay sash part DF/A sz 2 1RS | 681 - 850 | 740 | 456 | 200 | 12 | 130 kg | 1 | 4 |
| TSSD1030-... | stay sash part DF/A sz 3 1RS | 851 - 1050 | 910 | 552 | 200 | 12 | 130 kg | 1 | 6 |
| TSSD1040-... | stay sash part DF/A sz 4 1RS | 1051 - 1250 | 1110 | 552 | 200 | 12 | 130 kg | 1 | 7 |

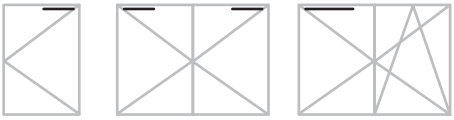

- The range of application conforms to the connecting components
- **Please observe:**
  Guidelines/notes on the product and on liability (VHBH directive as well as the other applicable documents listed - directive can be downloaded at www.beschlagindustrie.de/ggsb/richtlinien.asp )
  Specifications from the profile manufacturers/system owners (PVC, light metal) or DIN 68 121 “Wooden profiles for windows and portal doors”

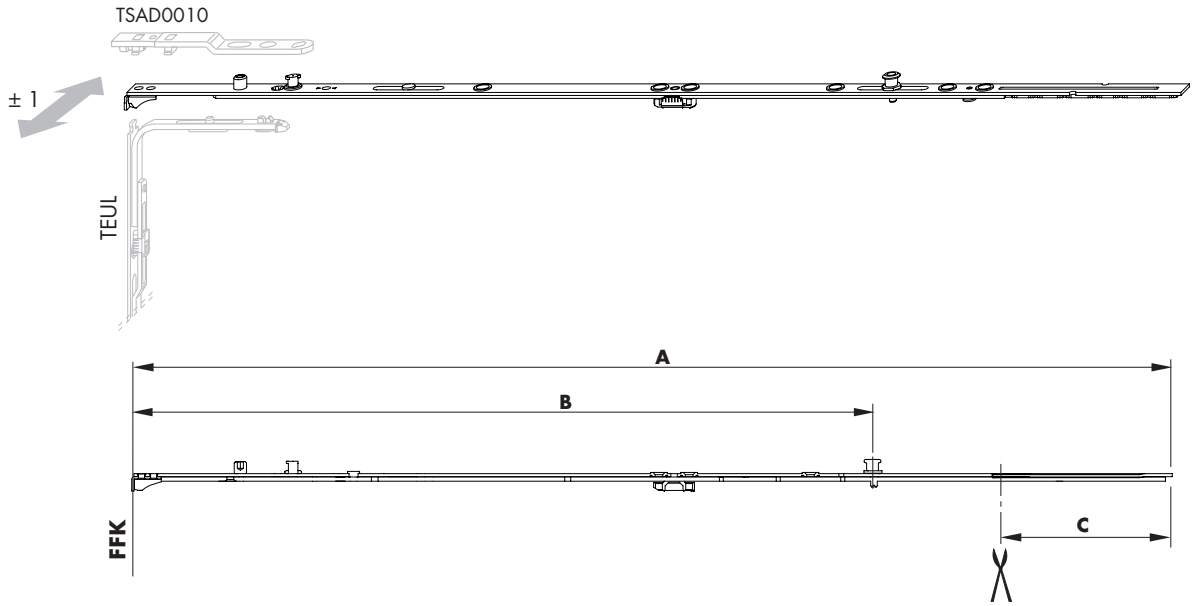

## Sales information

| Description | Part number | Surface | Colour | Box quantity |
|---|---|---|---|---|
| stay sash part DF/A sz 0 | TSSD1000-10001_ | Titan Silver | without | 1 pc |
| | TSSD1000-10004_ | Titan Silver | without | 25 pcs |
| stay sash part DF/A sz 1 | TSSD1010-10001_ | Titan Silver | without | 1 pc |
| | TSSD1010-10004_ | Titan Silver | without | 25 pcs |
| stay sash part DF/A sz 2 | TSSD1020-10001_ | Titan Silver | without | 1 pc |
| | TSSD1020-10004_ | Titan Silver | without | 25 pcs |
| stay sash part DF/A sz 2 1RS | TSSD1120-10001_ | Titan Silver | without | 1 pc |
| | TSSD1120-10004_ | Titan Silver | without | 25 pcs |
| stay sash part DF/A sz 3 1RS | TSSD1030-10001_ | Titan Silver | without | 1 pc |
| | TSSD1030-10004_ | Titan Silver | without | 25 pcs |
| stay sash part DF/A sz 4 1RS | TSSD1040-10001_ | Titan Silver | without | 1 pc |
| | TSSD1040-10004_ | Titan Silver | without | 25 pcs |

## Technical information

| Part number | Description | Dimensions (mm) A | Airgap | sash weight | | |
|---|---|---|---|---|---|---|
| TSSD0020-... | stay sash part DF/MN | 157 | 12 | 130 kg | 0 | 3 |

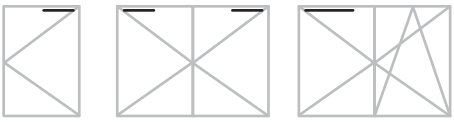

- **Please observe:**
  Guidelines/notes on the product and on liability (VHBH directive as well as the other applicable documents listed - directive can be downloaded at www.beschlagindustrie.de/ggsb/richtlinien.asp )
  Specifications from the profile manufacturers/system owners (PVC, light metal) or DIN 68 121 “Wooden profiles for windows and portal doors”

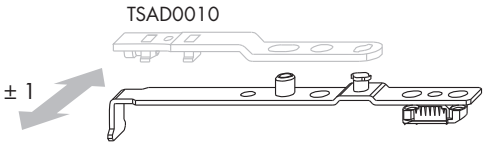


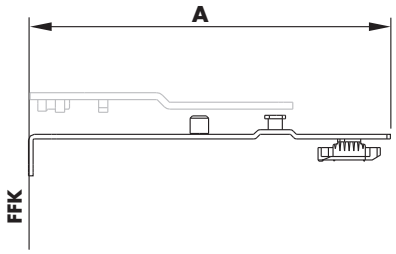


## Sales information

| Description | Part number | Surface | Colour | Box quantity |
|---|---|---|---|---|
| stay sash part DF/MN | TSSD0020-10001_ | Titan Silver | without | 1 pc |
| | TSSD0020-10006_ | Titan Silver | without | 100 pcs |

## Technical information

| Part number | Description | Dimensions (mm) A | Airgap | sash weight | | |
|---|---|---|---|---|---|---|
| TSSD0030-... | stay sash part DF/ON | 157 | 12 | 130 kg | 0 | 3 |

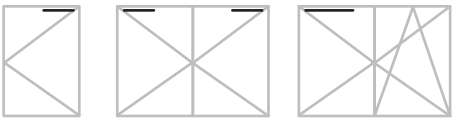

- For sashes without hardware groove
- **Please observe:**
  Guidelines/notes on the product and on liability (VHBH directive as well as the other applicable documents listed - directive can be downloaded at www.beschlagindustrie.de/ggsb/richtlinien.asp )
  Specifications from the profile manufacturers/system owners (PVC, light metal) or DIN 68 121 “Wooden profiles for windows and portal doors”

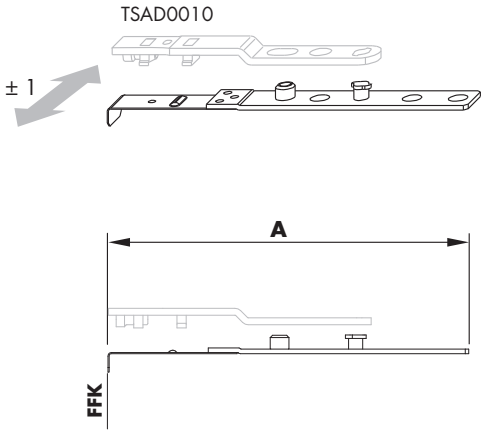


## Sales information

| Description | Part number | Surface | Colour | Box quantity |
|---|---|---|---|---|
| stay sash part DF/ON | TSSD0030-10001_ | Titan Silver | without | 1 pc |
| | TSSD0030-10006_ | Titan Silver | without | 100 pcs |

## Technical information

| Part number | Description | Dimensions (mm) A | Airgap | sash weight | | |
|---|---|---|---|---|---|---|
| TSSD0050-... | stay sash part DF/MN | 137 | 12 | 130 kg | 0 | 3 |

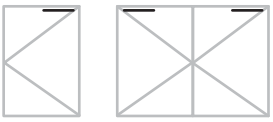

- The range of application conforms to the connecting components
- **Please observe:**
  Guidelines/notes on the product and on liability (VHBH directive as well as the other applicable documents listed - directive can be downloaded at www.beschlagindustrie.de/ggsb/richtlinien.asp )
  Specifications from the profile manufacturers/system owners (PVC, light metal) or DIN 68 121 “Wooden profiles for windows and portal doors”

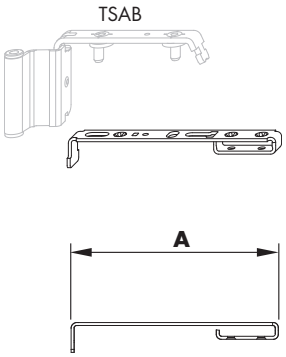


## Sales information

| Description | Part number | Surface | Colour | Box quantity |
|---|---|---|---|---|
| stay sash part DF/MN | TSSD0050-10001_ | Titan Silver | without | 1 pc |
| | TSSD0050-10005_ | Titan Silver | without | 50 pcs |

## Technical information

| Part number | Description | Dimensions (mm) | | Airgap | sash weight | | |
|---|---|---|---|---|---|---|---|
| | | A | B | | | | |
| TSSD0080-... | stay sash part DF/MN D8 | 137 | 49 | 12 | 130 kg | 0 | 3 |

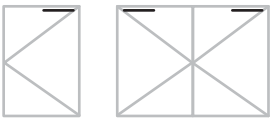

- The range of application conforms to the connecting components
- **Please observe:**
  Guidelines/notes on the product and on liability (VHBH directive as well as the other applicable documents listed - directive can be downloaded at www.beschlagindustrie.de/ggsb/richtlinien.asp )
  Specifications from the profile manufacturers/system owners (PVC, light metal) or DIN 68 121 “Wooden profiles for windows and portal doors”

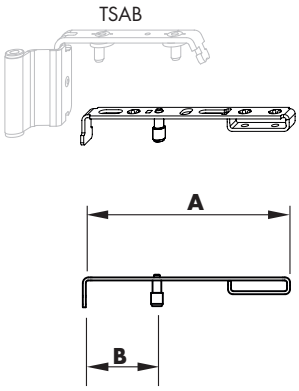


## Sales information

| Description | Part number | Surface | Colour | Box quantity |
|---|---|---|---|---|
| stay sash part DF/MN D8 | TSSD0080-10001_ | Titan Silver | without | 1 pc |
| | TSSD0080-10005_ | Titan Silver | without | 50 pcs |

## Technical information

| Part number | Description | FFB | Dimensions (mm) | | sash weight |
|---|---|---|---|---|---|
| | | | A | B | |
| TSAK1000-... | stay arm sz 0 | 230 - 450 | 167 | 80 | 100 kg |
| TSAK1010-... | stay arm sz 1 | 451 - 680 | 252 | 140 | 130 kg |
| TSAK1020-... | stay arm sz 2 | 651 - 850 | 378 | 140 | 130 kg |
| TSAK1030-... | stay arm sz 3 | 851 - 1650 | 465 | 140 | 130 kg |

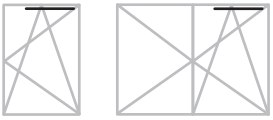

- Dimension B = opening width
- Note:
  Use stay arm Gr.3 with stay sash part Gr.3 and Gr.4
- Integrated anti-slam device in the tilt position
- **Please observe:**
  Guidelines/notes on the product and on liability (VHBH directive as well as the other applicable documents listed - directive can be downloaded at www.beschlagindustrie.de/ggsb/richtlinien.asp )
  Specifications from the profile manufacturers/system owners (PVC, light metal) or DIN 68 121 “Wooden profiles for windows and portal doors”

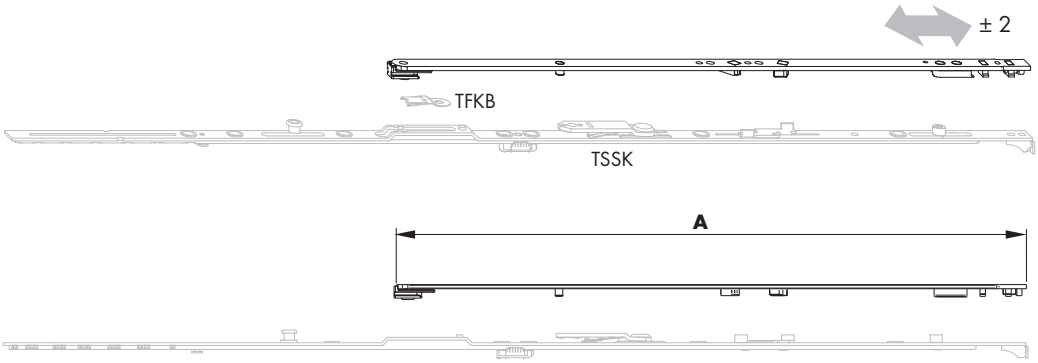


## Sales information

| Description | Part number | Surface | Colour | Box quantity |
|---|---|---|---|---|
| stay arm sz 0 | TSAK1000-10001_ | Titan Silver | without | 1 pc |
| | TSAK1000-10004_ | Titan Silver | without | 25 pcs |
| stay arm sz 1 | TSAK1010-10001_ | Titan Silver | without | 1 pc |
| | TSAK1010-10004_ | Titan Silver | without | 25 pcs |
| | TSAK1010-10042_ | Titan Silver | without | 2400 pcs |
| stay arm sz 2 | TSAK1020-10001_ | Titan Silver | without | 1 pc |
| | TSAK1020-10004_ | Titan Silver | without | 25 pcs |
| | TSAK1020-10030_ | Titan Silver | without | 1200 pcs |
| stay arm sz 3 | TSAK1030-10001_ | Titan Silver | without | 1 pc |
| | TSAK1030-10004_ | Titan Silver | without | 25 pcs |
| | TSAK1030-10030_ | Titan Silver | without | 1200 pcs |

## Technical information

| Part number | Description | FFB | Dimensions (mm) | | | | Airgap | sash weight | | |
|---|---|---|---|---|---|---|---|---|---|---|
| | | | A | B | C | D | | | | |
| TSKT2000-... | stay AF TBT sz 0 | 250 - 450 | 405 | - | 225 | 75 | 12 | 100 kg | 0 | 2 |
| TSKT2010-... | stay AF TBT sz 1 | 451 - 680 | 540 | - | 252 | 125 | 12 | 130 kg | 0 | 3 |
| TSKT2120-... | stay AF TBT sz 2 1RS | 681 - 850 | 740 | 456 | 202 | 140 | 12 | 150 kg | 1 | 4 |
| TSKT2030-... | stay AF TBT sz 3 1RS | 851 - 1050 | 910 | 552 | 202 | 140 | 12 | 150 kg | 1 | 6 |
| TSKT2040-... | stay AF TBT sz 4 1RS | 1051 - 1250 | 1110 | 552 | 202 | 140 | 12 | 150 kg | 1 | 7 |

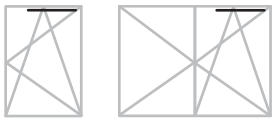

- Dimension D = opening width
- Switching function TBT = TILT BEFORE TURN
- Please note:
  FFB 1251-1450 stay AF sz 3 with additional stay AF
  FFB 1451-1650 stay AF sz 4 with additional stay AF
- Integrated anti-slam device in the tilt position
- Mishandling-device in tilt-position

- **Please observe:**
  Guidelines/notes on the product and on liability (VHBH directive as well as the other applicable documents listed - directive can be downloaded at www.beschlagindustrie.de/ggsb/richtlinien.asp )
  Specifications from the profile manufacturers/system owners (PVC, light metal) or DIN 68 121 “Wooden profiles for windows and portal doors”

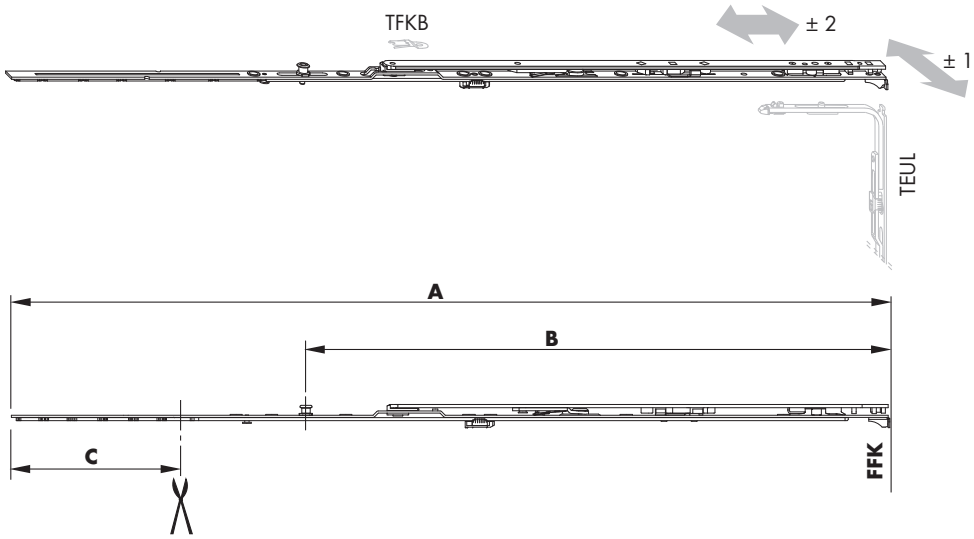


## Sales information

| Description | Part number | Surface | Colour | Box quantity |
|---|---|---|---|---|
| stay AF TBT sz 0 | TSKT2000-10001_ | Titan Silver | without | 1 pc |
| | TSKT2000-10004_ | Titan Silver | without | 25 pcs |
| stay AF TBT sz 1 | TSKT2010-10001_ | Titan Silver | without | 1 pc |
| | TSKT2010-10004_ | Titan Silver | without | 25 pcs |
| stay AF TBT sz 2 1RS | TSKT2120-10001_ | Titan Silver | without | 1 pc |
| | TSKT2120-10004_ | Titan Silver | without | 25 pcs |
| stay AF TBT sz 3 1RS | TSKT2030-10001_ | Titan Silver | without | 1 pc |
| | TSKT2030-10004_ | Titan Silver | without | 25 pcs |
| stay AF TBT sz 4 1RS | TSKT2040-10001_ | Titan Silver | without | 1 pc |
| | TSKT2040-10004_ | Titan Silver | without | 25 pcs |

## Technical information

| Part number | Description | Dimensions (mm)<br>A | sash weight |
|---|---|---|---|
| TSAD0010-... | stay arm DF | 115 | 130 kg |

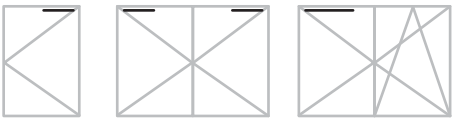

- **Please observe:**
  Guidelines/notes on the product and on liability (VHBH directive as well as the other applicable documents listed - directive can be downloaded at www.beschlagindustrie.de/ggsb/richtlinien.asp )
  Specifications from the profile manufacturers/system owners (PVC, light metal) or DIN 68 121 “Wooden profiles for windows and portal doors”

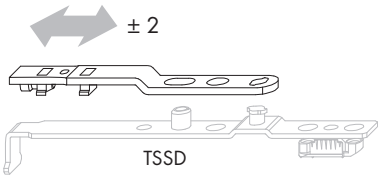


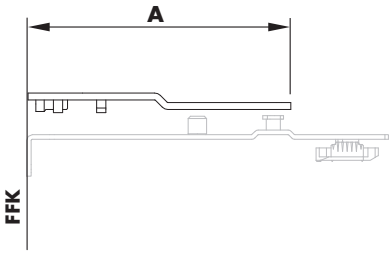


5

## Sales information

| Description | Part number | Surface | Colour | Box quantity |
|---|---|---|---|---|
| stay arm DF | TSAD0010-10001_ | Titan Silver | without | 1 pc |
| | TSAD0010-10006_ | Titan Silver | without | 100 pcs |

## Technical information

| Part number | Description | Airgap | rebate width | Groove axis | sash weight |
|---|---|---|---|---|---|
| TSAB6020-... | stay arm DF TITAN PVC 12/20-9 | 12 | 20 | 9 | 130 kg |
| TSAB6050-... | stay arm DF TITAN PVC 12/20-13 | 12 | 20 | 13 | 130 kg |
| TSAB6060-... | stay arm DF DH PVC 12/21-13 | 12 | 21 | 13 | 130 kg |

- The range of application conforms to the connecting components
- **Please observe:**
  Guidelines/notes on the product and on liability (VHBH directive as well as the other applicable documents listed - directive can be downloaded at www.beschlagindustrie.de/ggsb/richtlinien.asp )
  Specifications from the profile manufacturers/system owners (PVC, light metal) or DIN 68 121 “Wooden profiles for windows and portal doors”

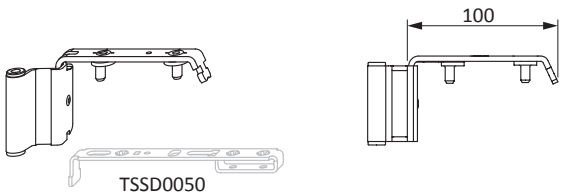


## Sales information

| Description | Part number | Surface | Colour | Box quantity |
|---|---|---|---|---|
| stay arm DF TITAN PVC 12/20-9 | TSAB6020-1H401_ | Titan Silver | F9 titan m dark | 1 pc |
| stay arm DF TITAN PVC 12/20-13 | TSAB6050-10001_ | Titan Silver | without | 1 pc |
| | TSAB6050-10005_ | Titan Silver | without | 50 pcs |
| | TSAB6050-10401_ | Titan Silver | RAL9016 | 1 pc |
| | TSAB6050-10405_ | Titan Silver | RAL9016 | 50 pcs |
| | TSAB6050-1H401_ | Titan Silver | F9 titan m dark | 1 pc |
| | TSAB6050-1H405_ | Titan Silver | F9 titan m dark | 50 pcs |
| stay arm DF DH PVC 12/21-13 | TSAB6060-10401_ | Titan Silver | RAL9016 | 1 pc |
| | TSAB6060-10405_ | Titan Silver | RAL9016 | 50 pcs |
| | TSAB6060-1H401_ | Titan Silver | F9 titan m dark | 1 pc |
| | TSAB6060-1H405_ | Titan Silver | F9 titan m dark | 50 pcs |

| Description | Material | Page |
|---|---|---|
| cover profile | 811757, 290569 | 6.1 - 3 |
| anti-drill guard | TGBS0010 | 6.1 - 4 |
| anti-drill guard 7/8 | TGBS0020 | 6.1 - 5 |
| fastening plate | ZFAP0020 | 6.1 - 6 |
| cover piece | TFAP0010 | 6.1 - 7 |
| anti-lift device | TFAH0010, TFAH0020, TFAH0040, TFAH0050 | 6.1 - 8 |
| friction stay | 704110, 700693, 704127, 704158, 704134, FSBR0010 | 6.1 - 9 |
| friction stay A0273 | ZSBR0110, ZSBR0120, FRSL0050 | 6.1 - 11 |
| night vent for side hung wind. | TMZZ0010 | 6.1 - 12 |
| turn lock w. cylinder | 713433, 801277, 892510 | 6.1 - 13 |
| concealed turn lock | ZSDS0010, ZMDS0010, ZMDS0030, ZMDS0020 | 6.1 - 11 |
| pressure piece long | TFFD0031, TFFD0032 | 6.1 - 13 |
| pressure piece FBS | TFFD0040 | 6.1 - 18 |
| energy saving stay | ZSES0010, TSES0010 | 6.1 - 19 |
| air gap limiter F | TFFB0020 | 6.1 - 20 |
| restrictor H-RC3 | ZXFB0010 | 6.1 - 21 |
| mishandling device | TFBS0010, TFFD0011, TFFD0012, TFFD0021, TFFD0022 | 6.1 - 22 |
| mishandling device RS | TFBS0091, TFBS0092, TFBS0081, TFBS0082, TFBS0061, TFBS0062 | 6.1 - 23 |
| cockspur fastner | 214411 | 6.1 - 24 |
| cockspur fastner A0092 | 214374 | 6.1 - 25 |
| brake stay | TSBR0040, TSBR0050 | 6.1 - 26 |
| sash lift | TFFH0030 | 6.1 - 28 |
| sash lift | TFFH0020 | 6.1 - 29 |
| sash lift A2000 | TFFH0010 | 6.1 - 30 |
| sash lift FBS | TFFH0091, TFFH0092 | 6.1 - 31 |
| cockspur fastner | ZSFF0010 | 6.1 - 32 |
| sash part MV conc. | 700662, FFMV0020, TFMV0020 | 6.1 - 33 |

| Description | Material | Page |
|---|---|---|
| sash part MV-W MN adjust. | FFMV0010, FFMV0050 | 6.1 - 34 |
| filling piece | TFFS0030 | 6.1 - 35 |
| filling piece for snapper | TRST0110 | 6.1 - 36 |
| handle VL secondary sash | THVL0011, THVL0012, THVL0021, THVL0022 | 6.1 - 37 |
| travel restrictor | TFHB0010, TFHB0020 | 6.1 - 38 |
| tilt restrictor | TFKB0010 | 6.1 - 39 |
| logoclip | ZASS0010 | 6.1 - 40 |
| striker snapper | TRST0010 | 6.1 - 41 |
| striker snapper AF | TRST0100 | 6.1 - 42 |
| screw indicators | TBZS0010, TBZS0020 | 6.1 - 43 |
| holder | SH001 | 6.1 - 44 |
| snapper | TFST0021, TFST0022 | 6.1 - 45 |
| snapper A2000 | TFST0031, TFST0032 | 6.1 - 46 |
| snapper switchable | TFST0011, TFST0012 | 6.1 - 47 |
| reinforcement SL | TMSV0010 | 6.1 - 48 |
| accessories DEF | 885680 | 6.1 - 49 |
| accessories SF/SB | 700044 | 6.1 - 50 |
| frame parts positioning aid | TART0550 | 6.1 - 51 |
| assembly key | ZAEW0030 | 6.1 - 52 |
| assembly key | ZAEW0070 | 6.1 - 53 |
| adjusting key SW4/SW11 | 157756 | 6.1 - 54 |
| adjusting key SW4/T15 | ZAEW0060 | 6.1 - 55 |

## Technical information

| Part number | Description |
|---|---|
| 811757 | cover profile 200 cm .. |
| 290569 | cover profile 100 cm .. |

811757 200 cm

290569 100 m

## Sales information

| Description | Part number | Surface | Colour | Box quantity |
|---|---|---|---|---|
| cover profile 200 cm .. | 811757 | neutral | RAL9003 | 1 pc |
| | 209387 | neutral | RAL9003 | 100 pcs |
| | 811740 | neutral | RAL8024 | 1 pc |
| | 209370 | neutral | RAL8024 | 100 pcs |
| cover profile 100 cm .. | 290569 | neutral | silver | 1 pc |

## Technical information

| Part number | Description |
|---|---|
| TGBS0010-... | anti-drill guard E |

- For gear with backset 15
- Meets the requirement in accordance with DIN EN 1627

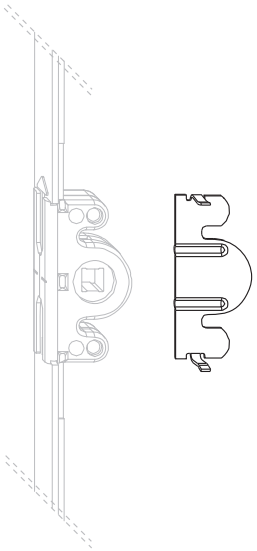



## Sales information

| Description | Part number | Surface | Colour | Box quantity |
|---|---|---|---|---|
| anti-drill guard E | TGBS0010-0G901_ | neutral | bronzed | 1 pc |
| | TGBS0010-0G906_ | neutral | bronzed | 100 pcs |

## Technical information

| Part number | Description |
|---|---|
| TGBS0020-... | anti-drill guard E 7/8 |

- For gear with backset 8
- Meets the requirement in accordance with DIN EN 1627

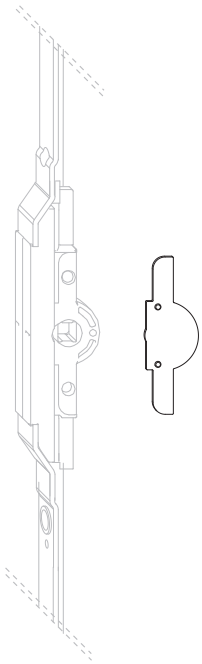



## Sales information

| Description | Part number | Surface | Colour | Box quantity |
|---|---|---|---|---|
| anti-drill guard E 7/8 | TGBS0020-0G901_ | neutral | bronzed | 1 pc |
| | TGBS0020-0G906_ | neutral | bronzed | 100 pcs |

## Technical information

| Part number | Description |
|---|---|
| ZFAP0020-... | fastening plate sec. sash .. A0204 |

- Applicable in all designs
- Additional fixing, which is screwed next to the eurogroove.

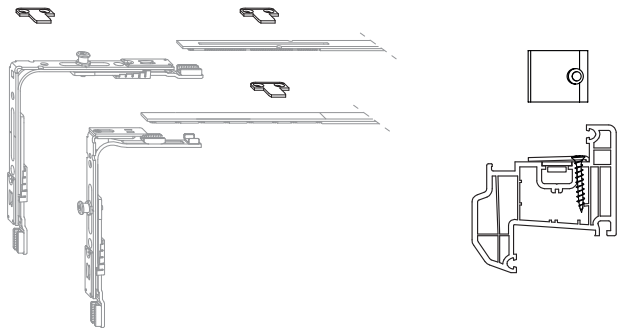



## Sales information

| Description | Part number | Surface | Colour | Box quantity |
|---|---|---|---|---|
| fastening plate sec. sash .. A0204 | ZFAP0020-10001_ | Titan Silver | without | 1 pc |
| | ZFAP0020-10006_ | Titan Silver | without | 100 pcs |

## Technical information

| Part number | Description |
|---|---|
| TFAP0010-... | cover piece .. |

- To connect two components with straight cropped edges

## Sales information

| Description | Part number | Surface | Colour | Box quantity |
|---|---|---|---|---|
| cover piece .. | TFAP0010-10001_ | Titan Silver | without | 1 pc |
| | TFAP0010-10006_ | Titan Silver | without | 100 pcs |

## Technical information

| Part number | Description |
|---|---|
| TFAH0040-... | anti-lift device 9/13MM 9 |
| TFAH0050-... | anti-lift device 9/13MM 13 |

- For RC2
- Striker plate S(L)-RS profile-related, refer to PDB line item TRSK
- Striker plate SL-RS WK2 BSO profile-related, refer to PDB line item TRSK03

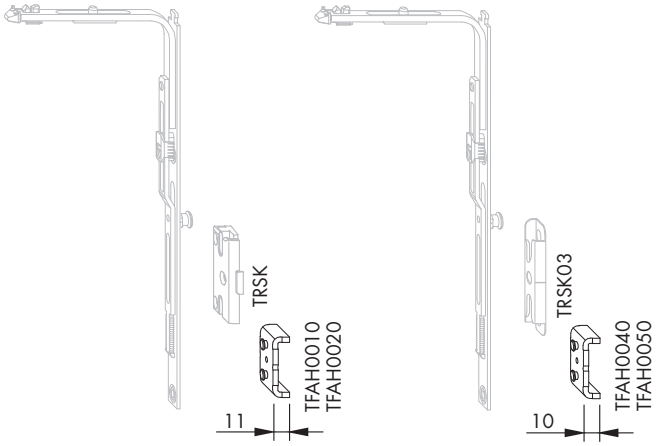




## Sales information

| Description | Part number | Surface | Colour | Box quantity |
|---|---|---|---|---|
| anti-lift device 9/13MM 9 | TFAH0040-10001_ | Titan Silver | without | 1 pc |
| | TFAH0040-10004_ | Titan Silver | without | 25 pcs |
| anti-lift device 9/13MM 13 | TFAH0050-10001_ | Titan Silver | without | 1 pc |
| | TFAH0050-10004_ | Titan Silver | without | 25 pcs |

## Technical information

| Part number | Description | FFB | Dimensions (mm) | | | | | |
|---|---|---|---|---|---|---|---|---|
| | | | A | B | C | D | | |
| 704110 | friction stay sz 190/126 | 429 - 800 | 190 | 29 | 45 | 90 | 1 | 4 |
| 700693 | friction stay sz 280/126 | 615 - 1200 | 280 | 125 | 117 | 60 | 1 | 4 |
| 704127 | friction stay sz 280/236,5 | 615 - 1200 | 280 | 125 | 117 | 90 | 1 | 4 |
| 704158 | friction stay sz 360/236,5 | 695 - 1460 | 360 | 125 | 160 | 60 | 1 | 4 |
| 704134 | friction stay sz 360/270 | 695 - 1460 | 360 | 125 | 160 | 90 | 1 | 4 |
| FSBR0010-... | friction stay sz 410/300 | 761 - 1560 | 410 | 141 | 190 | 90 | 1 | 4 |

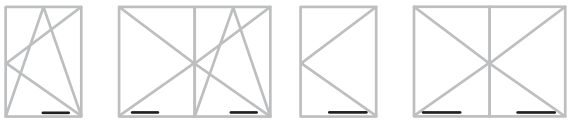

- Adjustable brake effect (SW 2.5)
- Dimension D = opening angle
- Do not use as an opening restrictor!
- *Acc. bag friction stay refer to PDB line item FMBR
- When using friction stays, the extension parts required for the locking distances must be taken into account
- The break stay sz 190/126 cannot be used in combination with a rebate corner hinge
- When using with hinge side axxent 24+ please observe the following:
  Only use sz. 280/236.5, sz. 360/270 and sz. 410/300 friction stays.
  The dimensions B and C in the above table only apply for surface-mounted hinge sides.
  Please see below for the dimensions for the axxent 24+ hinge side.

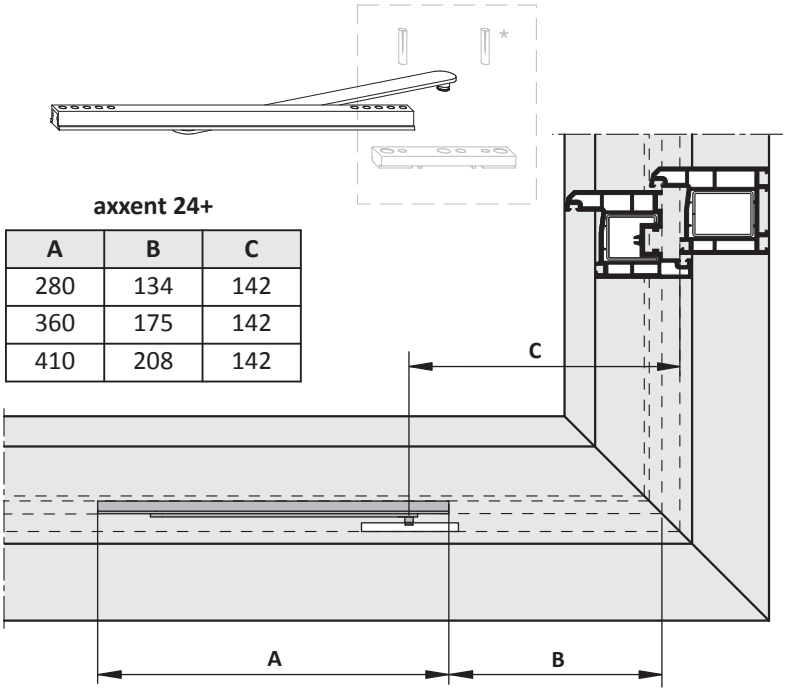


**axxent 24+**

| A | B | C |
|---|---|---|
| 280 | 134 | 142 |
| 360 | 175 | 142 |
| 410 | 208 | 142 |

## Sales information

| Description | Part number | Surface | Colour | Box quantity |
|---|---|---|---|---|
| friction stay sz 190/126 | 704110 | Titan Silver | without | 1 pc |
| | 279939 | Titan Silver | without | 50 pcs |
| friction stay sz 280/126 | 700693 | Titan Silver | without | 1 pc |
| | 275696 | Titan Silver | without | 25 pcs |
| friction stay sz 280/236,5 | 704127 | Titan Silver | without | 1 pc |
| | 279946 | Titan Silver | without | 25 pcs |
| friction stay sz 360/236,5 | 704158 | Titan Silver | without | 1 pc |
| | 279977 | Titan Silver | without | 25 pcs |
| friction stay sz 360/270 | 704134 | Titan Silver | without | 1 pc |
| | 279953 | Titan Silver | without | 25 pcs |
| friction stay sz 410/300 | FSBR0010-10001_ | Titan Silver | without | 1 pc |
| | FSBR0010-10002_ | Titan Silver | without | 10 pcs |

## Technical information

| Part number | Description | FFB | Dimensions (mm) | | | | Airgap | Groove axis | | |
|---|---|---|---|---|---|---|---|---|---|---|
| | | | A | B | C | D | | | | |
| ZSBR0110-... | BREMSS_AD_190_126 A0273 | 429 - 800 | 190 | 29 | 57 | 90 | - | - | 1 | 4 |
| ZSBR0120-... | BREMSS_AD_280_236 A0273 | 615 - 1200 | 280 | 125 | 129 | 90 | - | - | 1 | 4 |
| FRSL0050-... | top hinge block PVC A3550 | - | - | - | - | - | 12 | 13 | - | 4 |

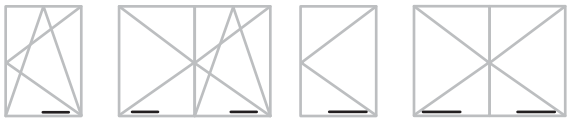

- Suitable for use with threshold
- Adjustable brake effect (SW 2.5)
- Dimension D = opening angle
- Do not use as an opening restrictor!
- Packer, refer to PDB line item TRUP50.
- When using friction stays, the extension parts required for the locking distances must be taken into account
- The break stay sz 190/126 cannot be used in combination with a rebate corner hinge

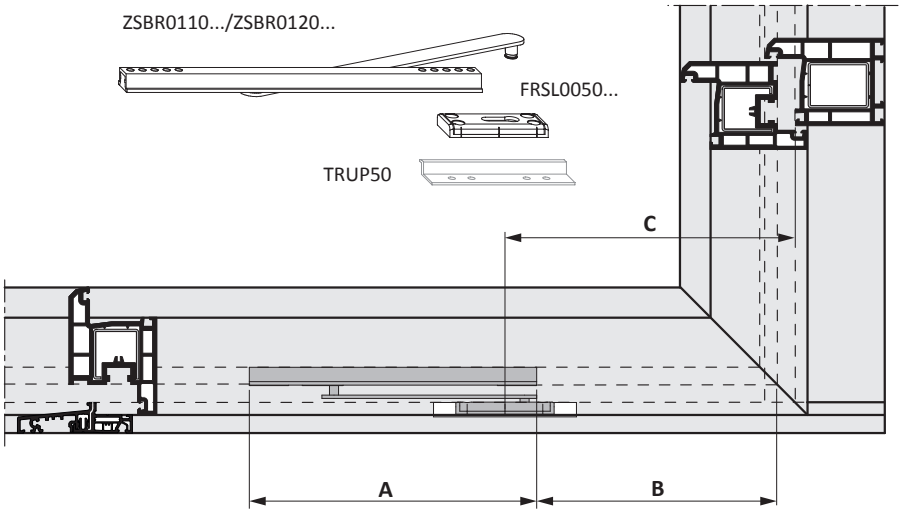


## Sales information

| Description | Part number | Surface | Colour | Box quantity |
|---|---|---|---|---|
| BREMSS_AD_190_126 A0273 | ZSBR0110-10001_ | Titan Silver | without | 1 pc |
| | ZSBR0110-10005_ | Titan Silver | without | 50 pcs |
| BREMSS_AD_280_236 A0273 | ZSBR0120-10001_ | Titan Silver | without | 1 pc |
| | ZSBR0120-10004_ | Titan Silver | without | 25 pcs |
| top hinge block PVC A3550 | FRSL0050-10004_ | Titan Silver | without | 25 pcs |

## Technical information

| Part number | Description |
|---|---|
| TMZZ0010-... | side hung night vent SD |

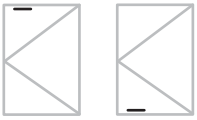

- 2 night vent positions
- Suitable catch plate FP
  PVC: FP410 - . . .
  timber: FP310 - . . .
- Oil moving parts once a year (only use acid and resin free oil)

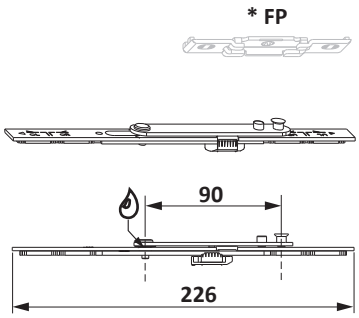




## Sales information

| Description | Part number | Surface | Colour | Box quantity |
|---|---|---|---|---|
| side hung night vent SD | TMZZ0010-10005_ | Titan Silver | without | 50 pcs |

## Technical information

| Part number | Description | |
|---|---|---|
| ZMDS0040-... | turning lock w. cylinder .. | - |
| 801277 | packer turning lock | 0 |
| 892510 | key 2W 145 | - |

- Lockable in closed and tilt position
- The sash can be tilted when turn lock is activated
- Please order packer and compensation piece 5° 801215 separately
- The key 2 W 145, material number 892510 is included in the box.

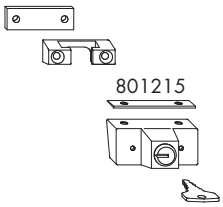


## Sales information

| Description | Part number | Surface | Colour | Box quantity |
|---|---|---|---|---|
| turning lock w. cylinder .. | ZMDS0040-00201_ | neutral | RAL9003 | 1 pc |
| | ZMDS0040-00205_ | neutral | RAL9003 | 50 pcs |
| | ZMDS0040-01101_ | neutral | RAL8019 | 1 pc |
| | ZMDS0040-01105_ | neutral | RAL8019 | 50 pcs |
| | ZMDS0040-10001_ | Titan Silver | without | 1 pc |
| | ZMDS0040-10005_ | Titan Silver | without | 50 pcs |
| packer turning lock | 801284 | neutral | RAL9003 | 1 pc |
| | 801291 | neutral | RAL8019 | 1 pc |
| | 801277 | Titan Silver | without | 1 pc |
| key 2W 145 | 892510 | Titan Silver | without | 1 pc |

## Technical information

| Part number | Description |
|---|---|
| ZSDS0010-... | key DSV .. |
| ZMDS0010-... | turning lock concealed .. |
| ZMDS0030-... | turning lock concealed sz 2 .. |
| ZMDS0020-... | turning lock concealed .. |

- Lockable by means of special key
- When locked, the window cannot be opened in the turn-mode
- Can be retro-fitted regardless of the hardware positioning
- Can be used with standard striker 56
- Use:
  Insert the key and push against the built-in sprocket
  Lock the DIN right-hand turning lock with clockwise rotation
  Lock the DIN left-hand turning lock with counterclockwise rotation
  - Toothed bar locks into the striker plate 56
  Open by means of counterclockwise rotation of the key

## Sales information

| Description | Part number | Surface | Colour | Box quantity |
|---|---|---|---|---|
| key DSV .. | ZSDS0010-10001_ | Titan Silver | without | 1 pc |
| | ZSDS0010-10005_ | Titan Silver | without | 50 pcs |
| turning lock concealed .. | ZMDS0010-00401_ | neutral | RAL9016 | 1 pc |
| | ZMDS0010-00405_ | neutral | RAL9016 | 50 pcs |
| | ZMDS0010-01101_ | neutral | RAL8019 | 1 pc |
| | ZMDS0010-01105_ | neutral | RAL8019 | 50 pcs |
| | ZMDS0010-0F601_ | neutral | RAL9006 | 1 pc |
| | ZMDS0010-0F605_ | neutral | RAL9006 | 50 pcs |
| turning lock concealed sz 2 .. | ZMDS0030-00405_ | neutral | RAL9016 | 50 pcs |
| | ZMDS0030-0F601_ | neutral | RAL9006 | 1 pc |
| | ZMDS0030-0F605_ | neutral | RAL9006 | 50 pcs |
| turning lock concealed .. | ZMDS0020-00401_ | neutral | RAL9016 | 1 pc |
| | ZMDS0020-00405_ | neutral | RAL9016 | 50 pcs |
| | ZMDS0020-0F601_ | neutral | RAL9006 | 1 pc |
| | ZMDS0020-0F605_ | neutral | RAL9006 | 50 pcs |

## Installation advice

- Abbreviations:
  TRKF = tilt lock bearing 56 S-RS.
  FRKA = tilt lock bearing S-ES FH.
  AkF = outer edge of sash.

The jig DSV is set for a 20 mm overlap; in the event of deviations, this is to be adjusted on site.

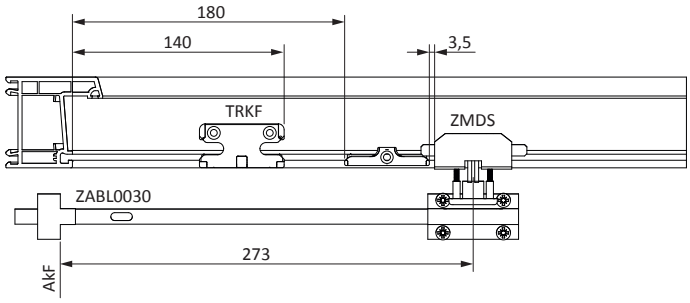


- Can only be used from FFB 451 mm for RC1 and RC2.
  RC1 and RC2 451 mm - 500 mm (manually adjust size on drilling jig DSV ZABL0030).

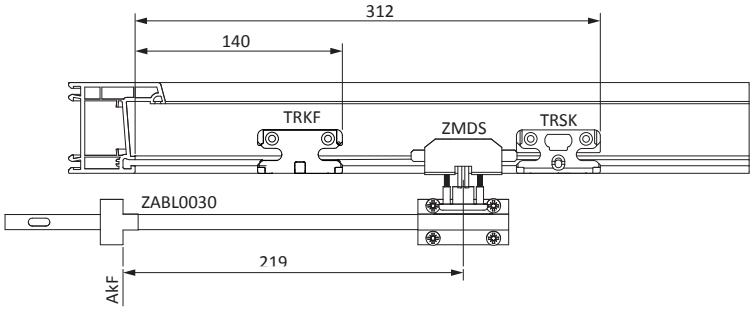


- S-ES FH tilt point

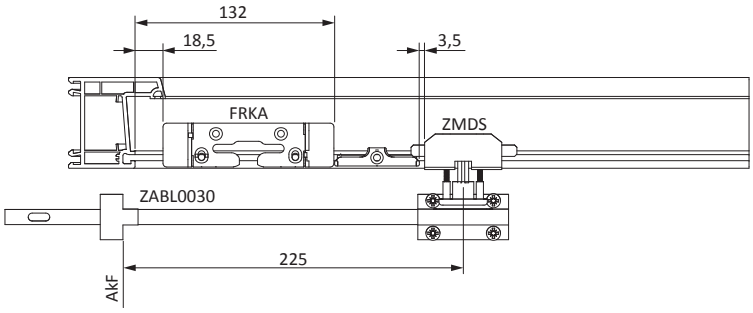

## Technical details

- **x PLEASE NOTE: Centre of toothed bar equals centre of fitting groove!**

  Predrill the specified dimensions using the jig and mount the lock.
  Dimension A (min. 11.5 mm) = required space in the frame rebate between the hardware groove centre and the turning lock's outside edge
  Dimension B* (12.5 mm - min. 9 mm) = required space in the sash rebate between the hardware groove centre and the turning lock's inside edge
  Dimension C* (min 0 mm) = difference between the inner edge of the turning lock and the sash rebate (screw -fixing plane) - Pack up with the enclosed distance plates
  Dimension D (min. 27.5 - max. 34.5 mm) = coverage dimension + groove central position

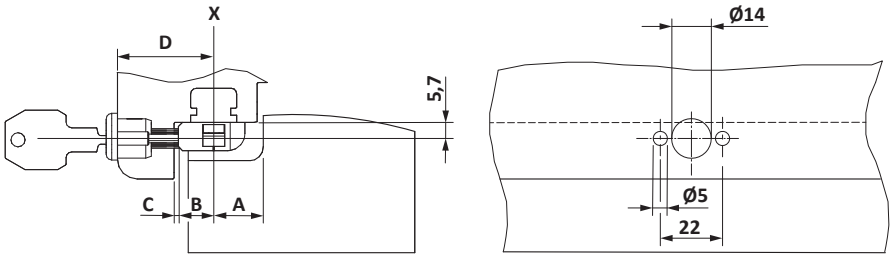


| | A | B | C | D |
|---|---|---|---|---|
| ZMDS0010 | 11 | 12,5 | - | 27,5 - 34,5 |
| ZMDS0030 | 11 | 12,5 | - | 31,5 - 39,5 |
| ZMDS0020 | 8,5 | 9 | - | 22 - 30 |

## Technical information

| Part number | Description |
|---|---|
| TFFD0031-... | long pressure piece 13 rh. |
| TFFD0032-... | long pressure piece 13 lh. |

- Special version; please consult with our application engineers beforehand
- Refer to the PDB, line item FRZF01 for matching stops

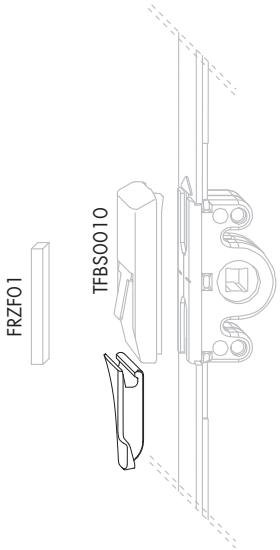


## Sales information

| Description | Part number | Surface | Colour | Box quantity |
|---|---|---|---|---|
| long pressure piece 13 rh. | TFFD0031-02301_ | neutral | RAL9005 | 1 pc |
| | TFFD0031-02307_ | neutral | RAL9005 | 250 pcs |
| long pressure piece 13 lh. | TFFD0032-02301_ | neutral | RAL9005 | 1 pc |
| | TFFD0032-02307_ | neutral | RAL9005 | 250 pcs |

## Technical information

| Part number | Description |
|---|---|
| TFFD0040-... | pressure piece FBS |

- Air gap min. 12 mm
- Refer to the PDB, line item FRZF01 for matching stops
- For profiles with extruded seals.
- PVC and ALU systems with a wide frame groove must be filled in the area of the pressure piece. See profile data sheet - Stop FBS.

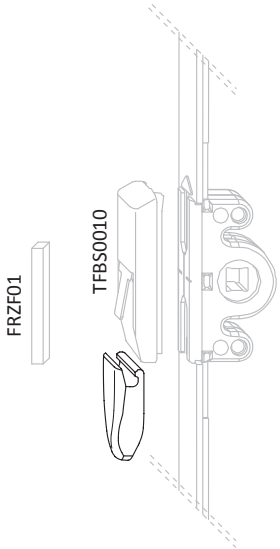




## Sales information

| Description | Part number | Surface | Colour | Box quantity |
|---|---|---|---|---|
| pressure piece FBS | TFFD0040-02301_ | neutral | RAL9005 | 1 pc |
| | TFFD0040-02307_ | neutral | RAL9005 | 250 pcs |

## Technical information

| Part number | Description |
|---|---|
| ZSES0010-... | energy saving stay ES040 .. |
| TSES0010-... | energy saving stay .. A0767 |

- Enables the sash to be tilted in an energy saving night-vent position
- Packer refer to PDB line item FRUP02

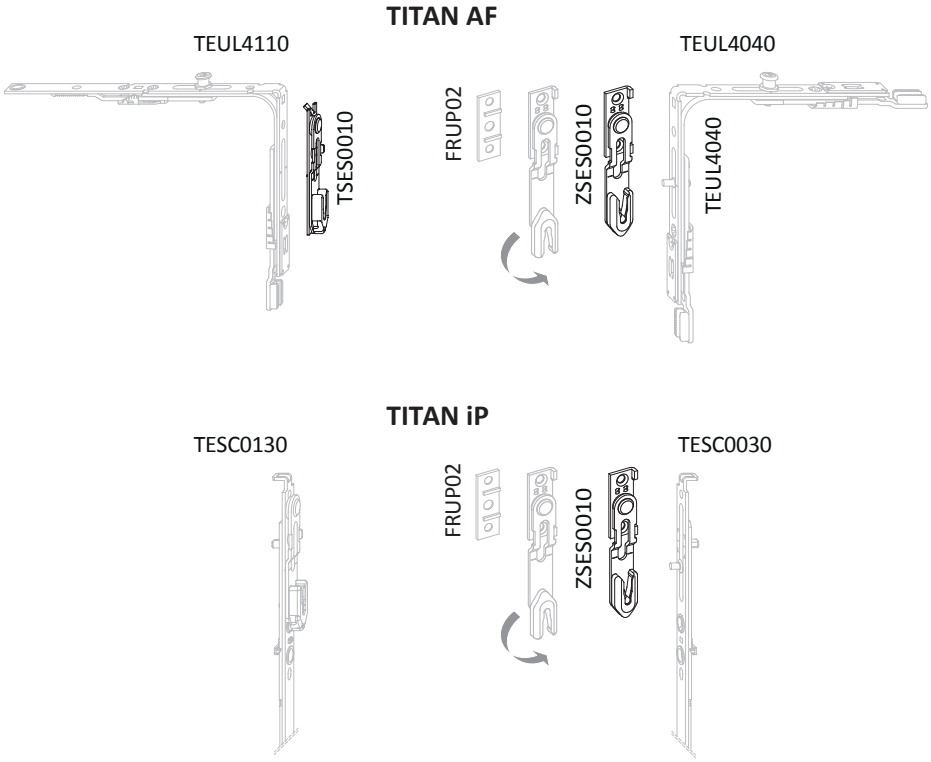


## Sales information

| Description | Part number | Surface | Colour | Box quantity |
|---|---|---|---|---|
| energy saving stay ES040 .. | ZSES0010-10001_ | Titan Silver | without | 1 pc |
| | ZSES0010-10005_ | Titan Silver | without | 50 pcs |
| energy saving stay .. A0767 | TSES0010-10001_ | Titan Silver | without | 1 pc |
| | TSES0010-10005_ | Titan Silver | without | 50 pcs |

## Technical information

| Part number | Description |
|---|---|
| TFFB0020-... | air gap limiter F 13 |

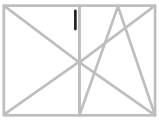

- Installation on the stop plate

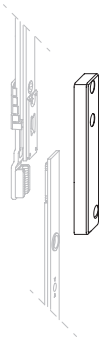



## Sales information

| Description | Part number | Surface | Colour | Box quantity |
|---|---|---|---|---|
| air gap limiter F 13 | TFFB0020-04001_ | neutral | silver | 1 pc |
| | TFFB0020-04004_ | neutral | silver | 25 pcs |

## Technical information

| Part number | Description |
|---|---|
| ZXFB0010-... | air gap limiter H-RC3 .. |

- For RC3
- Length 2000 mm, screw spacing 200 mm
- Installation around sash and frame
- Makes entry with a burglary tool more difficult

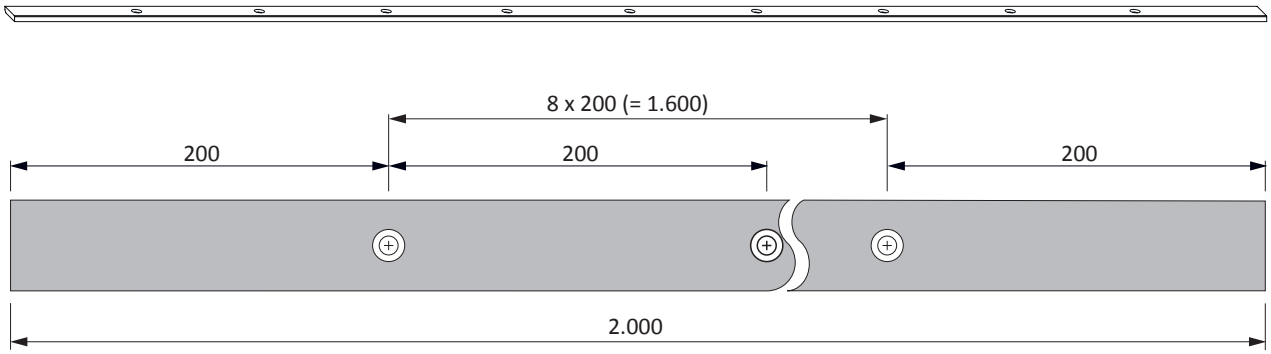


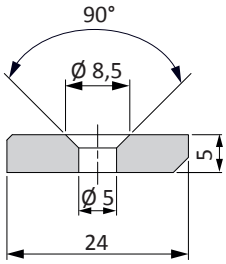




## Sales information

| Description | Part number | Surface | Colour | Box quantity |
|---|---|---|---|---|
| air gap limiter H-RC3 .. | ZXFB0010-0D301_ | neutral | RAL7011 | 1 pc |

## Technical information

| Part number | Description |
|---|---|
| TFBS0010-... | mishandling device |
| TFFD0011-... | pressure piece 9 rh. |
| TFFD0012-... | pressure piece 9 lh. |
| TFFD0021-... | pressure piece 13 rh. |
| TFFD0022-... | pressure piece 13 lh. |

- 1. gear 15
  2. gear 7
- Refer to the PDB, line item FRZF01 for matching stops
- * With handle position constant: handle position G + 12 mm

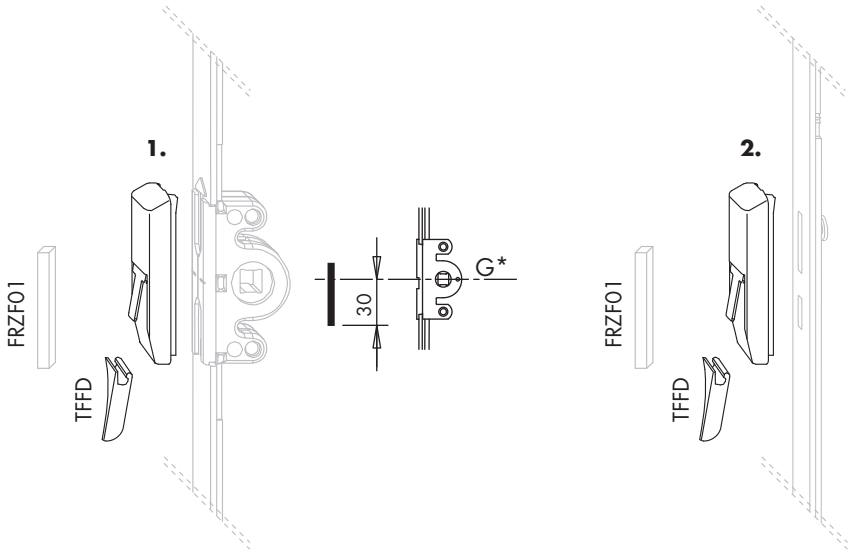


## Sales information

| Description | Part number | Surface | Colour | Box quantity |
|---|---|---|---|---|
| mishandling device | TFBS0010-04001_ | neutral | silver | 1 pc |
| | TFBS0010-04007_ | neutral | silver | 250 pcs |
| pressure piece 9 rh. | TFFD0011-02301_ | neutral | RAL9005 | 1 pc |
| | TFFD0011-02307_ | neutral | RAL9005 | 250 pcs |
| pressure piece 9 lh. | TFFD0012-02301_ | neutral | RAL9005 | 1 pc |
| | TFFD0012-02307_ | neutral | RAL9005 | 250 pcs |
| pressure piece 13 rh. | TFFD0021-02301_ | neutral | RAL9005 | 1 pc |
| | TFFD0021-02307_ | neutral | RAL9005 | 250 pcs |
| pressure piece 13 lh. | TFFD0022-02301_ | neutral | RAL9005 | 1 pc |
| | TFFD0022-02307_ | neutral | RAL9005 | 250 pcs |

## Technical information

| Part number | Description |
|---|---|
| TFBS0091-... | mishandling device RS KF 13 rh. |
| TFBS0092-... | mishandling device RS KF 13 lh. |
| TFBS0081-... | mishandling device 13 rh. |
| TFBS0082-... | mishandling device 13 lh. |
| TFBS0061-... | mishandling device VSU 13 rh. |
| TFBS0062-... | mishandling device VSU 13 lh. |

- For striker plates with 56 mm component length
- Applicable on 13 mm groove position
- TFBS009_ also applicable for TBT

TFBS0091/92

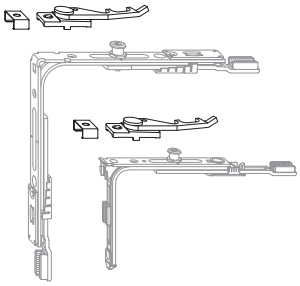

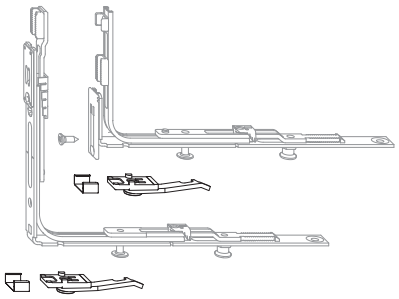

TFBS0061/62

## Sales information

| Description | Part number | Surface | Colour | Box quantity |
|---|---|---|---|---|
| mishandling device RS KF 13 rh. | TFBS0091-10001_ | Titan Silver | without | 1 pc |
| | TFBS0091-10006_ | Titan Silver | without | 100 pcs |
| mishandling device RS KF 13 lh. | TFBS0092-10001_ | Titan Silver | without | 1 pc |
| | TFBS0092-10006_ | Titan Silver | without | 100 pcs |
| mishandling device 13 rh. | TFBS0081-10001_ | Titan Silver | without | 1 pc |
| | TFBS0081-10006_ | Titan Silver | without | 100 pcs |
| mishandling device 13 lh. | TFBS0082-10001_ | Titan Silver | without | 1 pc |
| | TFBS0082-10006_ | Titan Silver | without | 100 pcs |
| mishandling device VSU 13 rh. | TFBS0061-10006_ | Titan Silver | without | 100 pcs |
| mishandling device VSU 13 lh. | TFBS0062-10006_ | Titan Silver | without | 100 pcs |

## Technical information

| Part number | Description |
|---|---|
| 214411 | cockspur fastner .. |

- 4 night vent positions
- Arrests the sash in the turn and tilt position
- Retrofittable

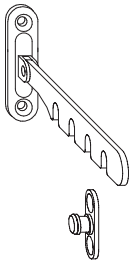



## Sales information

| Description | Part number | Surface | Colour | Box quantity |
|---|---|---|---|---|
| cockspur fastner .. | 214411 | neutral | RAL9003 | 100 pcs |
| | 214428 | neutral | d bronze | 100 pcs |

## Technical information

| Part number | Description |
|---|---|
| 214374 | cockspur fastner .. |

- 4 night vent positions
- Arrests the sash in the turn and tilt position
- Retrofittable
- Pivot joint particularly suitable for turn and tilt sashes

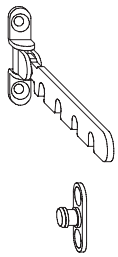



## Sales information

| Description | Part number | Surface | Colour | Box quantity |
|---|---|---|---|---|
| cockspur fastner .. | 214374 | neutral | RAL9003 | 100 pcs |
| | 214381 | neutral | d bronze | 100 pcs |

## Technical information

| Part number | Description | FFB | Dimensions (mm) | | | | | |
|---|---|---|---|---|---|---|---|---|
| | | | A | B | C | D | | |
| TSBR0040-... | brake stay TAB sz 1 | 470 - 690 | 540 | 55 | 18 | 200 | 1 | 4 |
| TSBR0050-... | brake stay TAB sz 2 | 691 - 960 | 718 | 132 | 104 | 250 | 1 | 4 |

- The dimensions specified only apply when using surface mounted hinges, whose pivot points correspond to SIEGENIA hinges. If pivot points differ, adjust dimensions so that a sash opening angle of 100° is not exceeded.
- Brake stay sz 1 **must not** used together with rebate corner hinges
- **Intended Use:**
  Keep inward opening window sash of side-hung and tilt and turn window elements in turn position for brief ventilation.
- Service in accordance with our operating and maintenance manual
- *Acc. bag friction stay refer to PDB line item FMBR
- **The following must be observed:**
  VHBH Guideline (Specification and Information on the Product and Liability) with the applicable documents stated herein) and the FBDF Guideline (Brake stay for Variable Turning Position of Sashes) - Download the guidelines at www.beschlagindustrie.de/ggsb/richtlinien.asp). Information from the profile manufacturer and/or system provider (PVC, aluminium) or the DIN 68 121 – „Timber Profiles for Windows and French Windows"

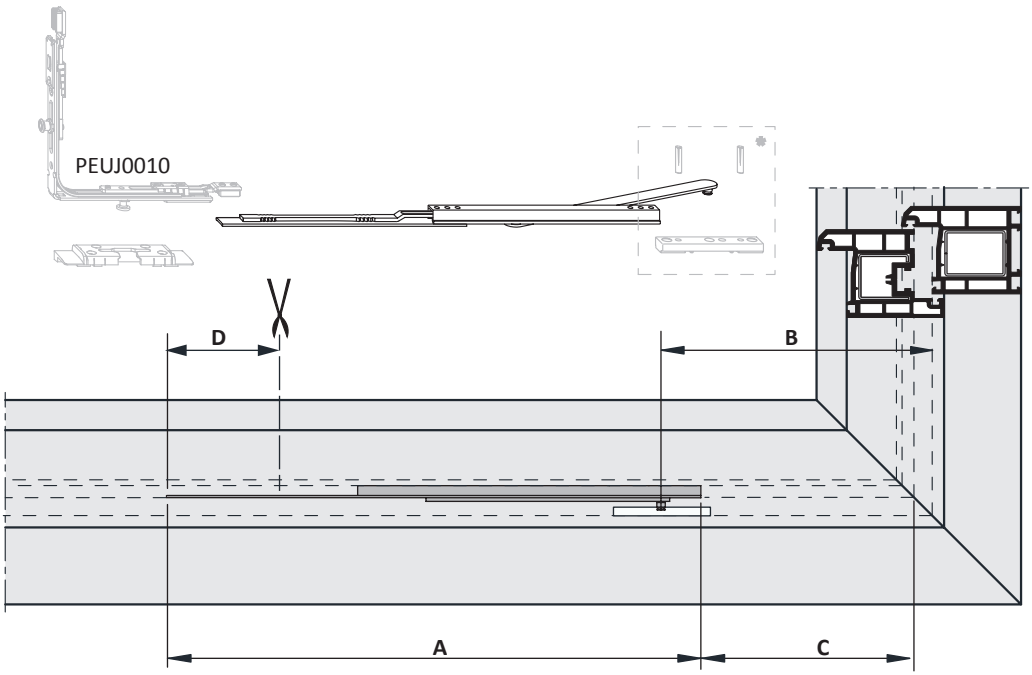


6.1

## Sales information

| Description | Part number | Surface | Colour | Box quantity |
|---|---|---|---|---|
| brake stay TAB sz 1 | TSBR0040-10001_ | Titan Silver | without | 1 pc |
| | TSBR0040-10002_ | Titan Silver | without | 10 pcs |
| brake stay TAB sz 2 | TSBR0050-10001_ | Titan Silver | without | 1 pc |
| | TSBR0050-10002_ | Titan Silver | without | 10 pcs |

## Installation advice

**DANGER**

**Risk of injury and death due to a sash falling out in the event of misuse!**

In the event of misuse (= movement of the sash that is opened and positioned in the direction of the turning position without first releasing the turn restrictor), large forces can be transferred on to bearing points (hinge-side supporting hardware) and their fixings, which can lead to their malfunction or failure.

- Select and fit hinge-side bearing hardware so that, even in the event of misuse of the sash that is opened and positioned in the direction of the turning position, damage to the load-bearing hardware or the malfunction or failure of the fixing is eliminated.
- Check whether the combination of window profile, hinge-side supporting hardware chosen – this also applies to SIEGENIA hinges – and their fixings withstands misuse. In this respect, check the sash opened and positioned in the direction of the turning position in accordance with Item 3.2 of Guideline FBDF.
- Apply operating instruction stickers near to the handle to avoid misuse.
- The turn restrictors shown here:
  - are used to keep a sash in a defined turning position
  - act against the accidental movement of a sash
  - offer no protection against falling out of a window
  - are not fall protection devices in the sense of the TRAV
  - do not constitute child safety locks
  - are not envisaged for use as arrestable brake-stays for the purposes of cleaning
  - are not envisaged for use as obstruction protection
  - are so-called comfort elements and thus are not safety devices in accordance with Item 4.8 of DIN EN 14351-1:2006+A1 and are not opening limiters in accordance with EN 13126-5

## Technical information

| Part number | Description |
|---|---|
| TFFH0030-... | sash-lift .. |

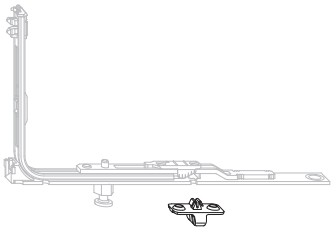



## Sales information

| Description | Part number | Surface | Colour | Box quantity |
|---|---|---|---|---|
| sash-lift .. | TFFH0030-02301_ | neutral | RAL9005 | 1 pc |
| | TFFH0030-02306_ | neutral | RAL9005 | 100 pcs |

## Technical information

| Part number | Description |
|---|---|
| TFFH0020-... | sash lift .. |

- with roller

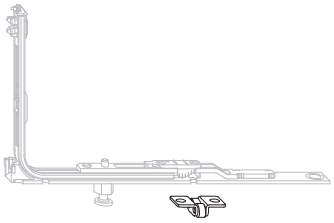



## Sales information

| Description | Part number | Surface | Colour | Box quantity |
|---|---|---|---|---|
| sash lift .. | TFFH0020-10001_ | Titan Silver | without | 1 pc |
| | TFFH0020-10006_ | Titan Silver | without | 100 pcs |

## Technical information

| Part number | Description |
|---|---|
| TFFH0010-... | sash lift .. A2000 |

- For open hardware groove
- Positioning up to max. middle of the sash
- Run-up ramp for sash lift; refer to PDB, line item TRAL

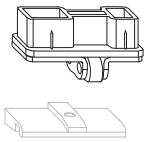

TRAL



## Sales information

| Description | Part number | Surface | Colour | Box quantity |
|---|---|---|---|---|
| sash lift .. A2000 | TFFH0010-10001_ | Titan Silver | without | 1 pc |
| | TFFH0010-10005_ | Titan Silver | without | 50 pcs |
| | TFFH0010-10008_ | Titan Silver | without | 500 pcs |

## Technical information

| Part number | Description |
|---|---|
| TFFH0091-... | sash lift FBS .. rh. |
| TFFH0092-... | sash lift FBS .. lh. |

- With integrated mishandling device
- Run up block for sash lift FBS, refer to PDB line item TRAU

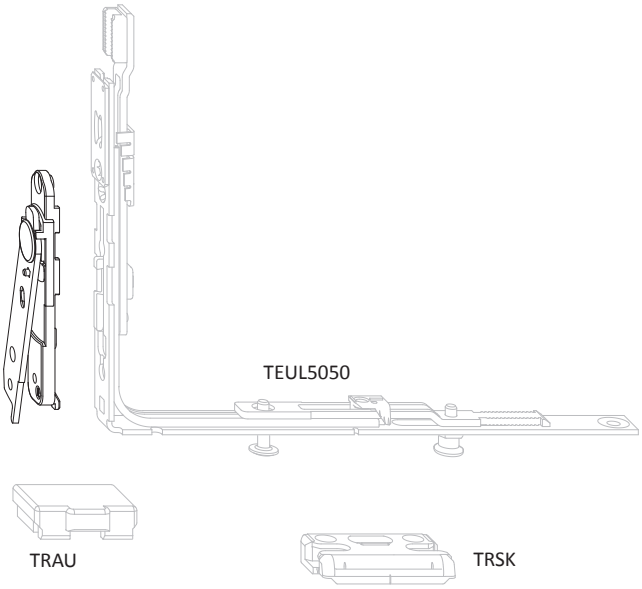


## Sales information

| Description | Part number | Surface | Colour | Box quantity |
|---|---|---|---|---|
| sash lift FBS .. rh. | TFFH0091-10001_ | Titan Silver | without | 1 pc |
| | TFFH0091-10006_ | Titan Silver | without | 100 pcs |
| sash lift FBS .. lh. | TFFH0092-10001_ | Titan Silver | without | 1 pc |
| | TFFH0092-10006_ | Titan Silver | without | 100 pcs |

## Technical information

| Part number | Description |
|---|---|
| ZSFF0010-... | cockspur fastner .. |

- Packer refer to PDB line item FRUP02

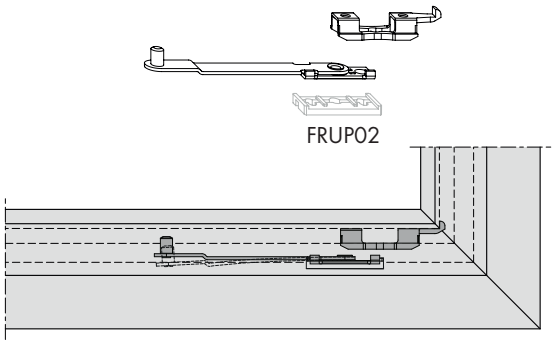




## Sales information

| Description | Part number | Surface | Colour | Box quantity |
|---|---|---|---|---|
| cockspur fastner .. | ZSFF0010-10001_ | Titan Silver | without | 1 pc |
| | ZSFF0010-10004_ | Titan Silver | without | 25 pcs |

## Technical information

| Part number | Description | |
|---|---|---|
| FFMV0050-... | sash part MV-W with groove .. | 2 |

- Retrofittable
- For open hardware groove
- Wind loads subject to test class 3 in accordance with DIN EN 12210 up to 1800 pascal
- Height-adjustment with hexagon wrench SW4
- Suitable frame part; refer to PDB, line item ZRZM02

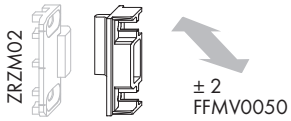


## Sales information

| Description | Part number | Surface | Colour | Box quantity |
|---|---|---|---|---|
| sash part MV-W with groove .. | FFMV0050-10001_ | Titan Silver | without | 1 pc |
| | FFMV0050-10006_ | Titan Silver | without | 100 pcs |

## Technical information

| Part number | Description | |
|---|---|---|
| 700662 | sash part MV conc. no groove .. | 2 |
| FFMV0020-... | sash part MV conc.no grve 13mm .. | 2 |
| TFMV0020-... | sash part MV conc. with groove .. | 2 |

- Retrofittable
- Compression adjustment with hexagon wrench SW4
- Suitable frame part is profile-related, refer to PDB line item ZRZM01

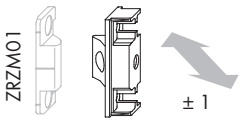


## Sales information

| Description | Part number | Surface | Colour | Box quantity |
|---|---|---|---|---|
| sash part MV conc. no groove .. | 700662 | Titan Silver | without | 1 pc |
| | 275986 | Titan Silver | without | 100 pcs |
| | 874844 | E-Look | without | 1 pc |
| | 261620 | E-Look | without | 100 pcs |
| sash part MV conc.no grve 13mm .. | FFMV0020-10001_ | Titan Silver | without | 1 pc |
| | FFMV0020-10006_ | Titan Silver | without | 100 pcs |
| sash part MV conc. with groove .. | TFMV0020-10001_ | Titan Silver | without | 1 pc |
| | TFMV0020-10006_ | Titan Silver | without | 100 pcs |
| | TFMV0020-20001_ | E-Look | without | 1 pc |
| | TFMV0020-20006_ | E-Look | without | 100 pcs |

## Technical information

| Part number | Description |
|---|---|
| TFFS0030-... | filling piece H |

- Facilitates covering the groove end on nonstop routed hardware grooves

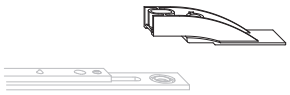



## Sales information

| Description | Part number | Surface | Colour | Box quantity |
|---|---|---|---|---|
| filling piece H | TFFS0030-04001_ | neutral | silver | 1 pc |
| | TFFS0030-04029_ | neutral | silver | 1000 pcs |

## Technical information

| Part number | Description |
|---|---|
| TRST0110-... | filling piece for snapper .. |

- When used in the striker plate S-RS, the filling piece provides an ideal stopping option with the door snapper (TFST002).

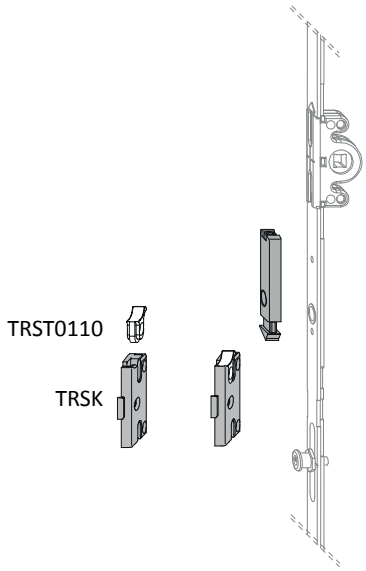




## Sales information

| Description | Part number | Surface | Colour | Box quantity |
|---|---|---|---|---|
| filling piece for snapper .. | TRST0110-0D701_ | neutral | RAL7021 | 1 pc |
| | TRST0110-0D706_ | neutral | RAL7021 | 100 pcs |

## Technical information

| Part number | Description | Dimensions (mm)<br>A |
|---|---|---|
| THVL0011-... | handle VL sec. sash rh. | 73 |
| THVL0012-... | handle VL sec. sash lh. | 73 |
| THVL0021-... | handle VL sec. sash AF rh. | 80 |
| THVL0022-... | handle VL sec. sash AF lh. | 80 |

- Lever extension for lever-operated espagnolette

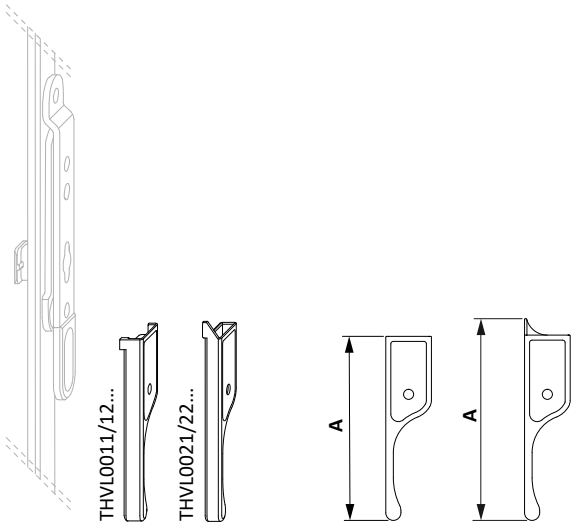


## Sales information

| Description | Part number | Surface | Colour | Box quantity |
|---|---|---|---|---|
| handle VL sec. sash rh. | THVL0011-10001_ | Titan Silver | without | 1 pc |
| | THVL0011-10004_ | Titan Silver | without | 25 pcs |
| handle VL sec. sash lh. | THVL0012-10001_ | Titan Silver | without | 1 pc |
| | THVL0012-10004_ | Titan Silver | without | 25 pcs |
| handle VL sec. sash AF rh. | THVL0021-10001_ | Titan Silver | without | 1 pc |
| | THVL0021-10004_ | Titan Silver | without | 25 pcs |
| handle VL sec. sash AF lh. | THVL0022-10001_ | Titan Silver | without | 1 pc |
| | THVL0022-10004_ | Titan Silver | without | 25 pcs |

## Technical information

| Part number | Description | |
|---|---|---|
| TFHB0010-... | travel restrictor | 1 |
| TFHB0020-... | travel restrictor clampable | 0 |

- The gear travel will be restricted to half way (90°)

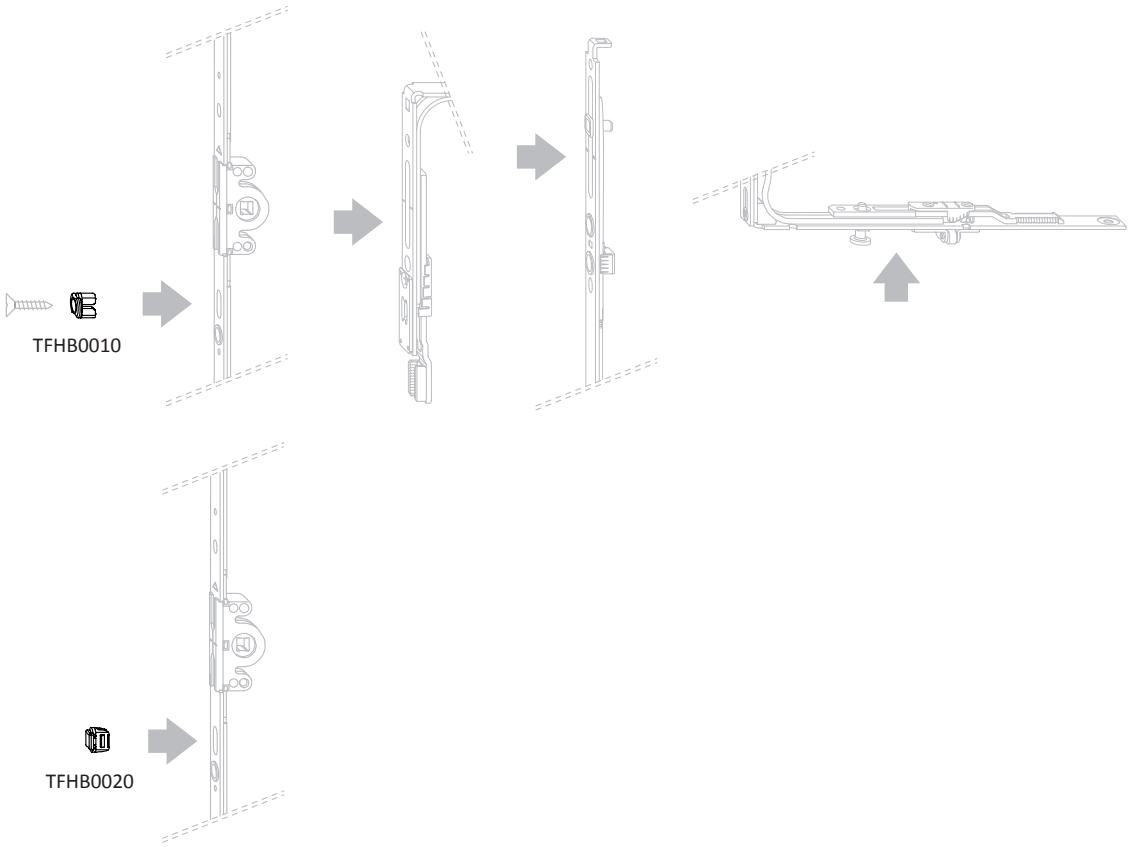




## Sales information

| Description | Part number | Surface | Colour | Box quantity |
|---|---|---|---|---|
| travel restrictor | TFHB0010-09901_ | neutral | black/undefined | 1 pc |
| | TFHB0010-09906_ | neutral | black/undefined | 100 pcs |
| travel restrictor clampable | TFHB0020-09901_ | neutral | black/undefined | 1 pc |
| | TFHB0020-09906_ | neutral | black/undefined | 100 pcs |

## Technical information

| Part number | Description | FFH |
|---|---|---|
| TFKB0010-... | tilt restrictor .. | 295 - 800 |

- Restricts the scissor stay's projecting depth to 100 mm

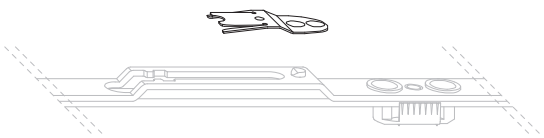



## Sales information

| Description | Part number | Surface | Colour | Box quantity |
|---|---|---|---|---|
| tilt restrictor .. | TFKB0010-10001_ | Titan Silver | without | 1 pc |
| | TFKB0010-10008_ | Titan Silver | without | 500 pcs |

## Technical information

| Part number | Description |
|---|---|
| ZASS0010-... | logo clip .. |

- For punch out on gear 15
- Only applicable without mishandling device TFBS001
- Customer-related logo on request

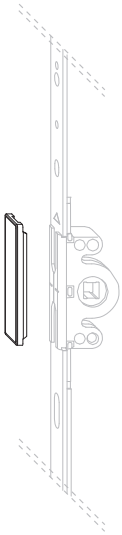



## Sales information

| Description | Part number | Surface | Colour | Box quantity |
|---|---|---|---|---|
| logo clip .. | ZASS0010-00201_ | neutral | RAL9003 | 1 pc |
| | ZASS0010-00208_ | neutral | RAL9003 | 500 pcs |

## Technical information

| Part number | Description | |
|---|---|---|
| TRST0010-... | striker snapper A0767 | 1 |

- For operational snapper with a floating mullion

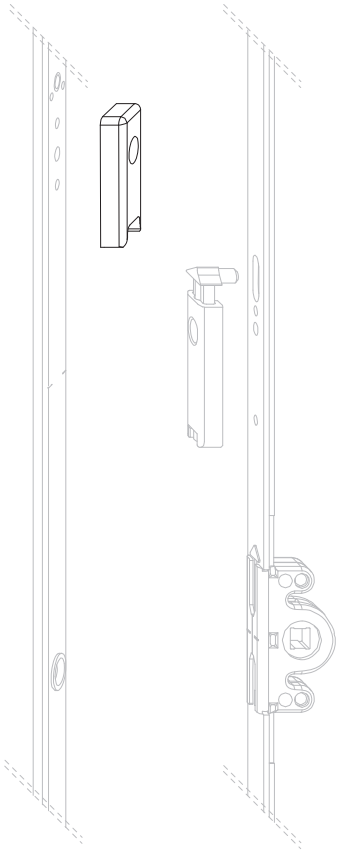



## Sales information

| Description | Part number | Surface | Colour | Box quantity |
|---|---|---|---|---|
| striker snapper A0767 | TRST0010-10001_ | Titan Silver | without | 1 pc |
| | TRST0010-10007_ | Titan Silver | without | 250 pcs |

## Technical information

| Part number | Description | |
|---|---|---|
| TRST0100-... | striker snapper AF A0767 | 1 |

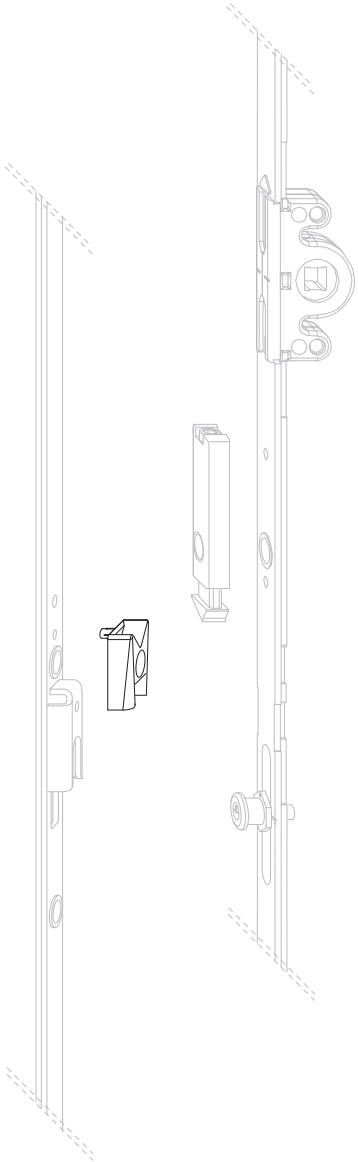



## Sales information

| Description | Part number | Surface | Colour | Box quantity |
|---|---|---|---|---|
| striker snapper AF A0767 | TRST0100-10001_ | Titan Silver | without | 1 pc |
| | TRST0100-10007_ | Titan Silver | without | 250 pcs |

## Technical information

| Part number | Description |
|---|---|
| TBZS0010-... | screw indicator SL |
| TBZS0020-... | screw indicator EL |

- The screw indicators prevent the hanging of the sash during window production before a visual inspection has been carried out. The visual inspection should ensure that all fixing screws have been put in place.
  1. Screw indicator for the top hinge
  2. Screw indicator for the bottom hinge
- You can find an example application here: https://youtu.be/7ca-7NSkYjM

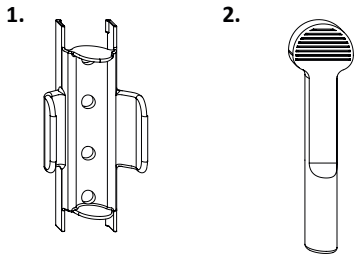


## Sales information

| Description | Part number | Surface | Colour | Box quantity |
|---|---|---|---|---|
| screw indicator SL | TBZS0010-0H501_ | neutral | signal red | 1 pc |
| | TBZS0010-0H507_ | neutral | signal red | 250 pcs |
| screw indicator EL | TBZS0020-0H501_ | neutral | signal red | 1 pc |
| | TBZS0020-0H507_ | neutral | signal red | 250 pcs |

## Technical information

| Part number | Description |
|---|---|
| SH001-... | holder .. |

- Applicable in all designs
- Fissaggio supplementare da avvitare accanto alla cava ferramenta.

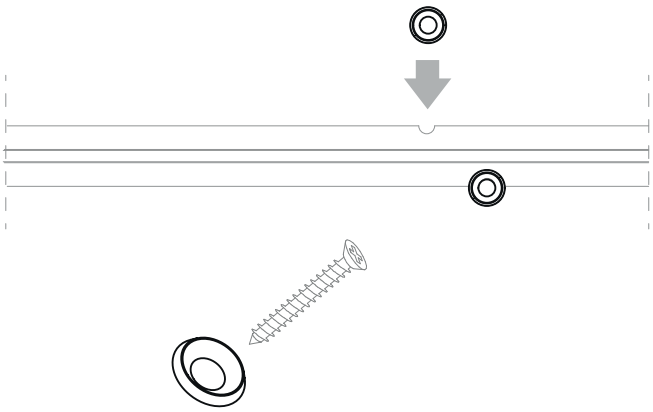



## Sales information

| Description | Part number | Surface | Colour | Box quantity |
|---|---|---|---|---|
| holder .. | SH001-60V0_ | Titan Silver | without | 100 pcs |

## Technical information

| Part number | Description | |
|---|---|---|
| TFST0021-... | snapper rh. | 1 |
| TFST0022-... | snapper lh. | 1 |

- Application range FFH 1601-3000 mm
  Fixed handle height gear from sz 140
  Centre fixed gear/variable from sz 160
- TRST0100 applicable on gears for secondary sashes 16

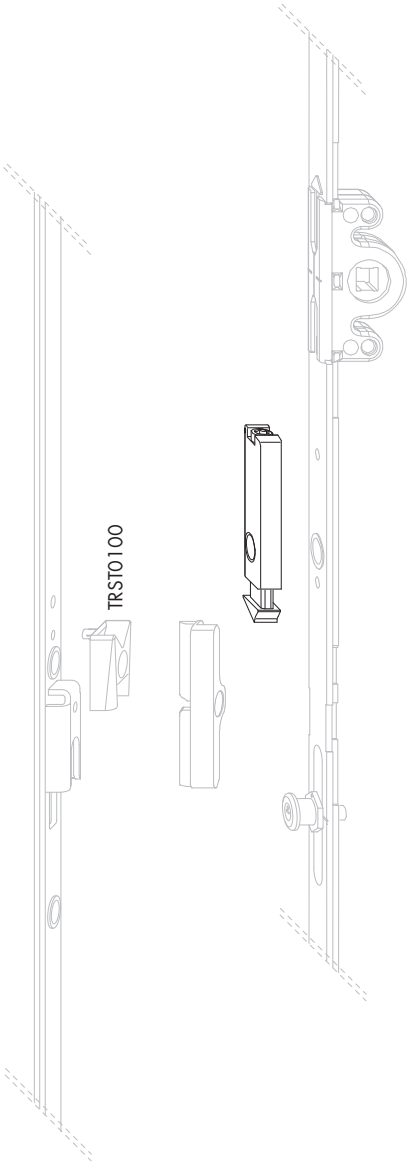


## Sales information

| Description | Part number | Surface | Colour | Box quantity |
|---|---|---|---|---|
| snapper rh. | TFST0021-10001_ | Titan Silver | without | 1 pc |
| | TFST0021-10005_ | Titan Silver | without | 50 pcs |
| snapper lh. | TFST0022-10001_ | Titan Silver | without | 1 pc |
| | TFST0022-10005_ | Titan Silver | without | 50 pcs |

## Technical information

| Part number | Description | |
|---|---|---|
| TFST0031-... | snapper A2000 rh. | 2 |
| TFST0032-... | snapper A2000 lh. | 2 |

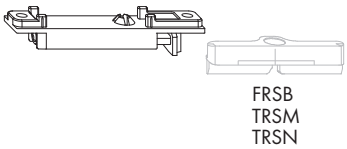




## Sales information

| Description | Part number | Surface | Colour | Box quantity |
|---|---|---|---|---|
| snapper A2000 rh. | TFST0031-10001_ | Titan Silver | without | 1 pc |
| | TFST0031-10005_ | Titan Silver | without | 50 pcs |
| snapper A2000 lh. | TFST0032-10001_ | Titan Silver | without | 1 pc |
| | TFST0032-10005_ | Titan Silver | without | 50 pcs |

## Technical information

| Part number | Description | |
|---|---|---|
| TFST0011-... | snapper switchable rh. | 1 |
| TFST0012-... | snapper switchable lh. | 1 |

- Application range FFH 1601-3000 mm
  Fixed handle height gear from sz 140
  Centre fixed gear/variable from sz 160
- Not suitable for use on secondary sash gear 8

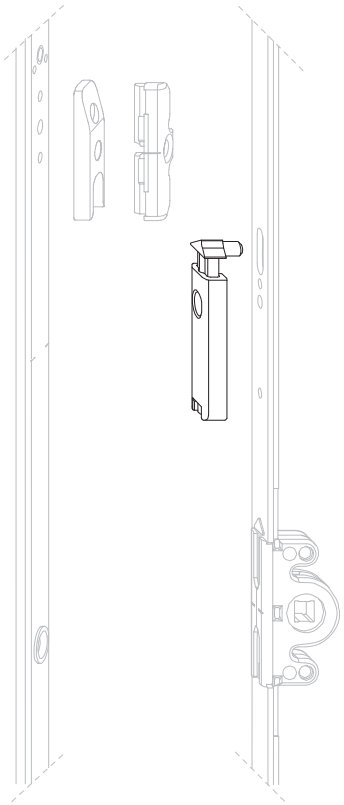

## Sales information

| Description | Part number | Surface | Colour | Box quantity |
|---|---|---|---|---|
| snapper switchable rh. | TFST0011-10001_ | Titan Silver | without | 1 pc |
| | TFST0011-10005_ | Titan Silver | without | 50 pcs |
| snapper switchable lh. | TFST0012-10001_ | Titan Silver | without | 1 pc |
| | TFST0012-10005_ | Titan Silver | without | 50 pcs |

## Technical information

| Part number | Description |
|---|---|
| TMSV0010-... | reinforcement SL |

- For additional screw fixing of the top hinge

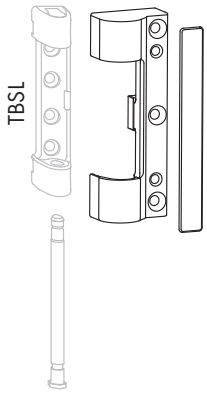




## Sales information

| Description | Part number | Surface | Colour | Box quantity |
|---|---|---|---|---|
| reinforcement SL | TMSV0010-00401_ | neutral | RAL9016 | 1 pc |
| | TMSV0010-00404_ | neutral | RAL9016 | 25 pcs |

## Technical information

| Part number | Description |
|---|---|
| 885680 | accessories DEF |

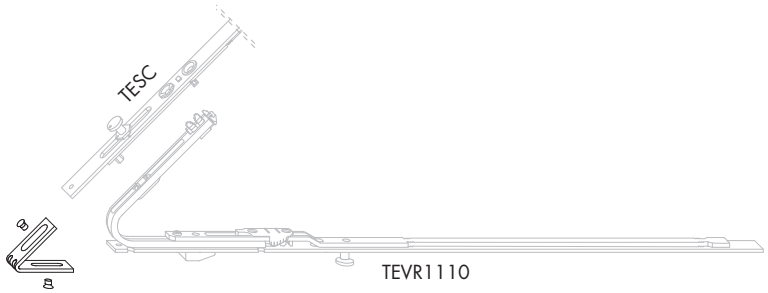




## Sales information

| Description | Part number | Surface | Colour | Box quantity |
|---|---|---|---|---|
| accessories DEF | 885680 | Titan Silver | without | 1 pc |

## Technical information

| Part number | Description |
|---|---|
| 700044 | accessories SF/SB |

## Sales information

| Description | Part number | Surface | Colour | Box quantity |
|---|---|---|---|---|
| accessories SF/SB | 700044 | Titan Silver | without | 1 pc |
| | 275139 | Titan Silver | without | 25 pcs |

## Technical information

| Part number | Description |
|---|---|
| TART0550-... | frame parts positioning aid 12/..-13 |

- For exact positioning of the TITAN vent secure frame parts on the hung window.
- The positioning aid is slid via the comfort mushroom cams, it can either be used with the centering function for the TITAN vent secure frame parts or to mark the cam position on the frame.
- As a marking gauge, the positioning aid can also be used to position the standard (TRSM/TRSN) or security striker plates (TRSK).
- You can find an example application here: https://youtu.be/2wuYHXi3Ffo

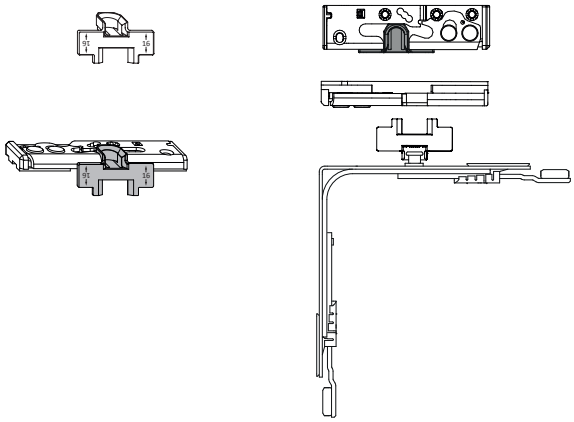

## Sales information

| Description | Part number | Surface | Colour | Box quantity |
|---|---|---|---|---|
| frame parts positioning aid 12/..-13 | TART0550-04601_ | neutral | RAL 9005 | 1 pc |
| | TART0550-04602_ | neutral | RAL 9005 | 10 pcs |

## Technical information

| Part number | Description |
|---|---|
| ZAEW0030-... | assembly key TITAN .. |

- To pull out the top hinge pin of the TITAN hinge
  A = loosen top hinge pin
  B = pull out top hinge pin

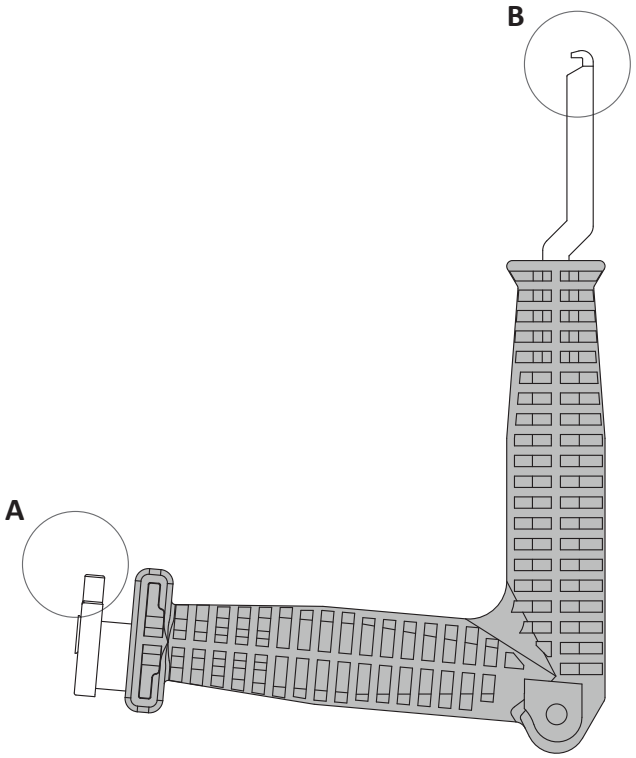




## Sales information

| Description | Part number | Surface | Colour | Box quantity |
|---|---|---|---|---|
| assembly key TITAN .. | ZAEW0030-02301_ | neutral | RAL9005 | 1 pc |
| | ZAEW0030-02302_ | neutral | RAL9005 | 10 pcs |

## Technical information

| Part number | Description |
|---|---|
| ZAEW0070-... | assembly key TITAN .. |

- To pull out the top hinge pin of the TITAN hinge
  A = loosen top hinge pin
  B = pull out top hinge pin

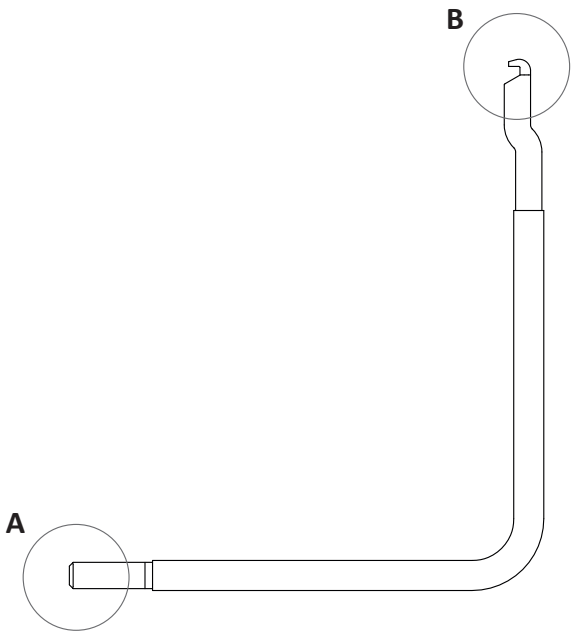




## Sales information

| Description | Part number | Surface | Colour | Box quantity |
|---|---|---|---|---|
| assembly key TITAN .. | ZAEW0070-10001_ | Titan Silver | without | 1 pc |

## Technical information

| Part number | Description |
|---|---|
| 157756 | adjusting key SW4/SW11 .. |

- For aligning adjustable hardware components

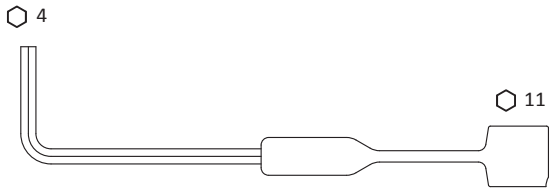




## Sales information

| Description | Part number | Surface | Colour | Box quantity |
|---|---|---|---|---|
| adjusting key SW4/SW11 .. | 157756 | neutral | silver undefined | 1 pc |

## Technical information

| Part number | Description |
|---|---|
| ZAEW0060-... | adjusting key SW4/T15 .. |

- For aligning adjustable hardware components

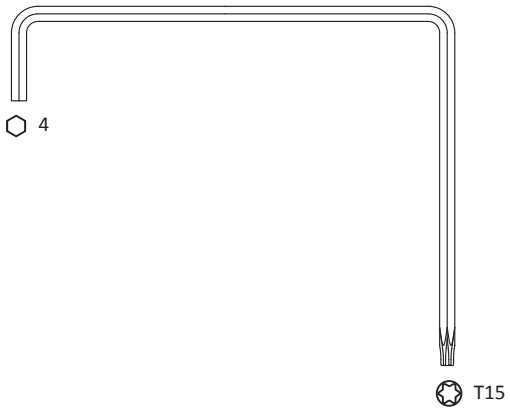




## Sales information

| Description | Part number | Surface | Colour | Box quantity |
|---|---|---|---|---|
| adjusting key SW4/T15 .. | ZAEW0060-10001_ | Titan Silver | without | 1 pc |

| Description | Material | Page |
|---|---|---|
| handle GLOBE | ZHGS0010, ZHGS0020, ZHGS1000 | 6.2 - 2 |
| handle GLOBE SI-AU | ZHGS0040 | 6.2 - 3 |
| handle GLOBE SEC | ZHGS0100, ZHGS0050, ZHGS0060, ZHGS0110 | 6.2 - 4 |
| handle GLOBE SEC SI-AU | ZHGS0080 | 6.2 - 6 |
| handle GLOBE SEC 12 | ZHGS0090 | 6.2 - 7 |
| handle GLOBE lock. 40 | ZHGA0010, ZHGA0020, ZHGA0070 | 6.2 - 8 |
| handle GLOBE SEC ABS 100 | ZHGA0060, ZHGA0080 | 6.2 - 9 |
| handle GLOBE DKN | ZHGD0020, ZHGD0030 | 6.2 - 10 |
| handle GLOBE TBT 40 | ZHGT0010, ZHGT0020, ZHGT0030 | 6.2 - 11 |
| handle GLOBE SP | ZHGL0020 | 6.2 - 12 |
| handle GLOBE demountable | ZHGN0010, ZHGR0030 | 6.2 - 13 |
| handle GLOBE TL/PZ | ZMZP0030, ZMZP0020, ZMZP0010, ZMZP0040, ZMGP0010 | 6.2 - 14 |
| handle GLOBE TL/PZ flat | ZMZP0030, ZMZP0020, ZMZP0010, ZMZP0040, ZMGP0020 | 6.2 - 15 |

## Technical information

| Part number | Description | Dimensions (mm)<br>A |
|---|---|---|
| ZHGS0010-... | handle GLOBE 31 | 31 |
| ZHGS0020-... | handle GLOBE 35 | 35 |
| ZHGS1000-... | handle GLOBE 40 | 40 |

- Lug diameter 10 mm
- Dimension A = spindle length
- Lug diameter 12 mm and alternative spindle lengths available upon request

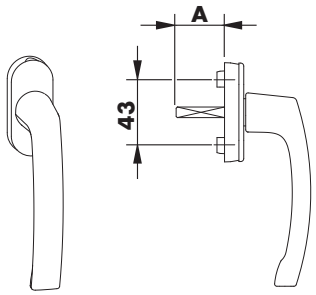


## Sales information

| Description | Part number | Surface | Colour | Box quantity |
|---|---|---|---|---|
| handle GLOBE 31 | ZHGS0010-00401_ | neutral | RAL9016 | 1 pc |
| | ZHGS0010-00406_ | neutral | RAL9016 | 100 pcs |
| | ZHGS0010-02401_ | neutral | EV1/EV1 | 1 pc |
| | ZHGS0010-02406_ | neutral | EV1/EV1 | 100 pcs |
| handle GLOBE 35 | ZHGS0020-00401_ | neutral | RAL9016 | 1 pc |
| | ZHGS0020-00406_ | neutral | RAL9016 | 100 pcs |
| | ZHGS0020-01201_ | neutral | RAL8022 | 1 pc |
| | ZHGS0020-01206_ | neutral | RAL8022 | 100 pcs |
| | ZHGS0020-02401_ | neutral | EV1/EV1 | 1 pc |
| | ZHGS0020-02406_ | neutral | EV1/EV1 | 100 pcs |
| | ZHGS0020-0H401_ | neutral | F9 titan m dark | 1 pc |
| | ZHGS0020-0H406_ | neutral | F9 titan m dark | 100 pcs |
| | ZHGS0020-0I201_ | neutral | F3 matt gold | 1 pc |
| | ZHGS0020-0I206_ | neutral | F3 matt gold | 100 pcs |
| | ZHGS0020-0K601_ | neutral | F4 bronze | 1 pc |
| | ZHGS0020-0K606_ | neutral | F4 bronze | 100 pcs |
| handle GLOBE 40 | ZHGS1000-00401_ | neutral | RAL9016 | 1 pc |
| | ZHGS1000-00406_ | neutral | RAL9016 | 100 pcs |
| | ZHGS1000-01201_ | neutral | RAL8022 | 1 pc |
| | ZHGS1000-01206_ | neutral | RAL8022 | 100 pcs |
| | ZHGS1000-02401_ | neutral | EV1/EV1 | 1 pc |
| | ZHGS1000-02406_ | neutral | EV1/EV1 | 100 pcs |
| | ZHGS1000-0H401_ | neutral | F9 titan m dark | 1 pc |
| | ZHGS1000-0H406_ | neutral | F9 titan m dark | 100 pcs |
| | ZHGS1000-0K601_ | neutral | F4 bronze | 1 pc |
| | ZHGS1000-0K606_ | neutral | F4 bronze | 100 pcs |

## Technical information

| Part number | Description | Dimensions (mm)<br>A |
|---|---|---|
| ZHGS0040-... | handle GLOBE 35 | 35 |

- Lug diameter 10 mm
- Dimension A = spindle length
- With SIEGENIA logo on the cover plate
- Lug diameter 12 mm and alternative spindle lengths available upon request

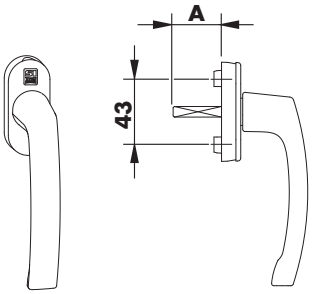


## Sales information

| Description | Part number | Surface | Colour | Box quantity |
|---|---|---|---|---|
| handle GLOBE 35 | ZHGS0040-02401_ | neutral | EV1/EV1 | 1 pc |
| | ZHGS0040-02406_ | neutral | EV1/EV1 | 100 pcs |

## Technical information

| Part number | Description | Dimensions (mm)<br>A |
|---|---|---|
| ZHGS0100-... | handle GLOBE SEC 25 | - |
| ZHGS0050-... | handle GLOBE SEC 31 | 31 |
| ZHGS0060-... | handle GLOBE SEC 35 | 35 |
| ZHGS0110-... | handle GLOBE SEC 40 | - |

- Makes it difficult to twist the square spindle and thereby to move the window drive from the outside
- Lug diameter 10 mm
- Dimension A = spindle length
- Lug diameter 12 mm and alternative spindle lengths available upon request

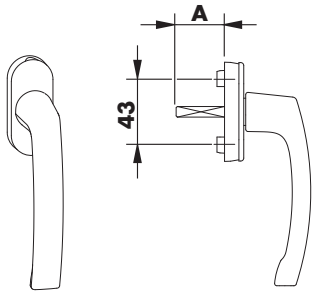

## Sales information

| Description | Part number | Surface | Colour | Box quantity |
|---|---|---|---|---|
| handle GLOBE SEC 25 | ZHGS0100-00401_ | neutral | RAL9016 | 1 pc |
| | ZHGS0100-00406_ | neutral | RAL9016 | 100 pcs |
| | ZHGS0100-01201_ | neutral | RAL8022 | 1 pc |
| | ZHGS0100-01206_ | neutral | RAL8022 | 100 pcs |
| | ZHGS0100-0H401_ | neutral | F9 titan m dark | 1 pc |
| | ZHGS0100-0H406_ | neutral | F9 titan m dark | 100 pcs |
| | ZHGS0100-0K601_ | neutral | F4 bronze | 1 pc |
| | ZHGS0100-0K606_ | neutral | F4 bronze | 100 pcs |
| handle GLOBE SEC 31 | ZHGS0050-00401_ | neutral | RAL9016 | 1 pc |
| | ZHGS0050-00406_ | neutral | RAL9016 | 100 pcs |
| | ZHGS0050-02401_ | neutral | EV1/EV1 | 1 pc |
| | ZHGS0050-02406_ | neutral | EV1/EV1 | 100 pcs |
| | ZHGS0050-0H401_ | neutral | F9 titan m dark | 1 pc |
| | ZHGS0050-0H406_ | neutral | F9 titan m dark | 100 pcs |
| handle GLOBE SEC 35 | ZHGS0060-00401_ | neutral | RAL9016 | 1 pc |
| | ZHGS0060-00406_ | neutral | RAL9016 | 100 pcs |
| | ZHGS0060-01201_ | neutral | RAL8022 | 1 pc |
| | ZHGS0060-01206_ | neutral | RAL8022 | 100 pcs |
| | ZHGS0060-02401_ | neutral | EV1/EV1 | 1 pc |
| | ZHGS0060-02406_ | neutral | EV1/EV1 | 100 pcs |
| | ZHGS0060-0H401_ | neutral | F9 titan m dark | 1 pc |
| | ZHGS0060-0H406_ | neutral | F9 titan m dark | 100 pcs |
| | ZHGS0060-0I201_ | neutral | F3 matt gold | 1 pc |
| | ZHGS0060-0I206_ | neutral | F3 matt gold | 100 pcs |
| | ZHGS0060-0K601_ | neutral | F4 bronze | 1 pc |
| | ZHGS0060-0K606_ | neutral | F4 bronze | 100 pcs |
| handle GLOBE SEC 40 | ZHGS0110-00401_ | neutral | RAL9016 | 1 pc |
| | ZHGS0110-00406_ | neutral | RAL9016 | 100 pcs |
| | ZHGS0110-01201_ | neutral | RAL8022 | 1 pc |
| | ZHGS0110-01206_ | neutral | RAL8022 | 100 pcs |
| | ZHGS0110-02401_ | neutral | EV1/EV1 | 1 pc |
| | ZHGS0110-02406_ | neutral | EV1/EV1 | 100 pcs |
| | ZHGS0110-0H401_ | neutral | F9 titan m dark | 1 pc |
| | ZHGS0110-0H406_ | neutral | F9 titan m dark | 100 pcs |
| | ZHGS0110-0K601_ | neutral | F4 bronze | 1 pc |
| | ZHGS0110-0K606_ | neutral | F4 bronze | 100 pcs |

## Technical information

| Part number | Description | Dimensions (mm)<br>A |
|---|---|---|
| ZHGS0080-... | handle GLOBE SEC 35 | 35 |

- Makes it difficult to twist the square spindle and thereby to move the window drive from the outside
- Lug diameter 10 mm
- Dimension A = spindle length
- With SIEGENIA logo on the cover plate
- Lug diameter 12 mm and alternative spindle lengths available upon request

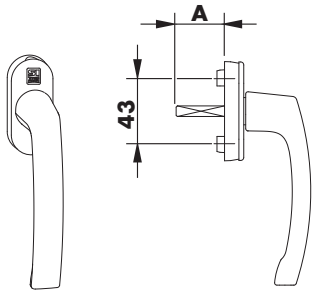


## Sales information

| Description | Part number | Surface | Colour | Box quantity |
|---|---|---|---|---|
| handle GLOBE SEC 35 | ZHGS0080-00401_ | neutral | RAL9016 | 1 pc |
| | ZHGS0080-00406_ | neutral | RAL9016 | 100 pcs |
| | ZHGS0080-01201_ | neutral | RAL8022 | 1 pc |
| | ZHGS0080-01206_ | neutral | RAL8022 | 100 pcs |
| | ZHGS0080-02401_ | neutral | EV1/EV1 | 1 pc |
| | ZHGS0080-02406_ | neutral | EV1/EV1 | 100 pcs |
| | ZHGS0080-0H401_ | neutral | F9 titan m dark | 1 pc |
| | ZHGS0080-0H406_ | neutral | F9 titan m dark | 100 pcs |
| | ZHGS0080-0I201_ | neutral | F3 matt gold | 1 pc |
| | ZHGS0080-0I206_ | neutral | F3 matt gold | 100 pcs |
| | ZHGS0080-0K601_ | neutral | F4 bronze | 1 pc |
| | ZHGS0080-0K606_ | neutral | F4 bronze | 100 pcs |

## Technical information

| Part number | Description |
|---|---|
| ZHGS0090-... | handle GLOBE SEC 40 |

- Makes it difficult to twist the square spindle and thereby to move the window drive from the outside
- Lug diameter 12mm
- Dimension A = spindle length

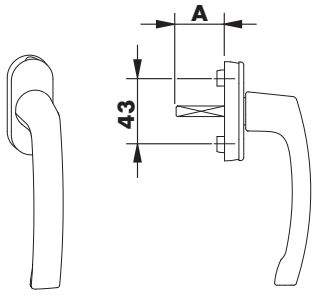


## Sales information

| Description | Part number | Surface | Colour | Box quantity |
|---|---|---|---|---|
| handle GLOBE SEC 40 | ZHGS0090-00401_ | neutral | RAL9016 | 1 pc |
| | ZHGS0090-00406_ | neutral | RAL9016 | 100 pcs |

## Technical information

| Part number | Description | Dimensions (mm)<br>A |
|---|---|---|
| ZHGA0010-... | handle GLOBE ABS40 31 | 31 |
| ZHGA0020-... | handle GLOBE ABS40 35 | 35 |
| ZHGA0070-... | handle GLOBE ABS40 40 | - |

- Lockable with push cylinder
- 40 Nm resistance against breaking and tearing
- Lug diameter 10 mm
- Dimension A = spindle length
- Lug diameter 12 mm and alternative spindle lengths available upon request

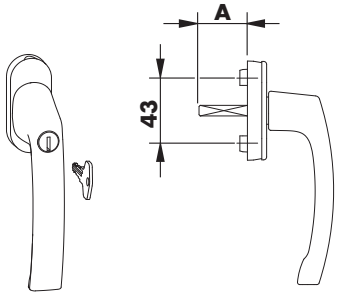


## Sales information

| Description | Part number | Surface | Colour | Box quantity |
|---|---|---|---|---|
| handle GLOBE ABS40 31 | ZHGA0010-02401_ | neutral | EV1/EV1 | 1 pc |
| | ZHGA0010-02402_ | neutral | EV1/EV1 | 10 pcs |
| handle GLOBE ABS40 35 | ZHGA0020-00401_ | neutral | RAL9016 | 1 pc |
| | ZHGA0020-00402_ | neutral | RAL9016 | 10 pcs |
| | ZHGA0020-01201_ | neutral | RAL8022 | 1 pc |
| | ZHGA0020-01202_ | neutral | RAL8022 | 10 pcs |
| | ZHGA0020-02401_ | neutral | EV1/EV1 | 1 pc |
| | ZHGA0020-02402_ | neutral | EV1/EV1 | 10 pcs |
| | ZHGA0020-0H401_ | neutral | F9 titan m dark | 1 pc |
| | ZHGA0020-0H402_ | neutral | F9 titan m dark | 10 pcs |
| | ZHGA0020-0K601_ | neutral | F4 bronze | 1 pc |
| | ZHGA0020-0K602_ | neutral | F4 bronze | 10 pcs |
| handle GLOBE ABS40 40 | ZHGA0070-00401_ | neutral | RAL9016 | 1 pc |
| | ZHGA0070-00402_ | neutral | RAL9016 | 10 pcs |
| | ZHGA0070-0H401_ | neutral | F9 titan m dark | 1 pc |
| | ZHGA0070-0H402_ | neutral | F9 titan m dark | 10 pcs |
| | ZHGA0070-0K601_ | neutral | F4 bronze | 1 pc |
| | ZHGA0070-0K602_ | neutral | F4 bronze | 10 pcs |

## Technical information

| Part number | Description | Dimensions (mm)<br>A |
|---|---|---|
| ZHGA0060-... | handle GLOBE ABS100 SEC 35 | 35 |
| ZHGA0080-... | handle GLOBE ABS100 SEC 40 | 40 |

- Lockable with push cylinder
- 100 Nm resistance against breaking and tearing according to DIN EN 1627
- Makes it difficult to twist the square spindle and thereby to move the window drive from the outside
- Lug diameter 10 mm
- Dimension A = spindle length
- Lug diameter 12 mm and alternative spindle lengths available upon request

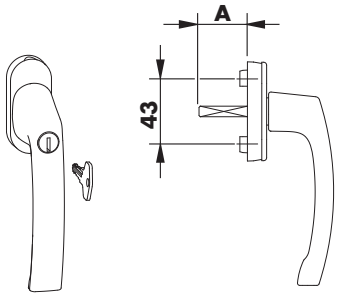


## Sales information

| Description | Part number | Surface | Colour | Box quantity |
|---|---|---|---|---|
| handle GLOBE ABS100 SEC 35 | ZHGA0060-00401_ | neutral | RAL9016 | 1 pc |
| | ZHGA0060-00402_ | neutral | RAL9016 | 10 pcs |
| | ZHGA0060-01201_ | neutral | RAL8022 | 1 pc |
| | ZHGA0060-01202_ | neutral | RAL8022 | 10 pcs |
| | ZHGA0060-02401_ | neutral | EV1/EV1 | 1 pc |
| | ZHGA0060-02402_ | neutral | EV1/EV1 | 10 pcs |
| | ZHGA0060-0H401_ | neutral | F9 titan m dark | 1 pc |
| | ZHGA0060-0H402_ | neutral | F9 titan m dark | 10 pcs |
| handle GLOBE ABS100 SEC 40 | ZHGA0080-00402_ | neutral | RAL9016 | 10 pcs |
| | ZHGA0080-01202_ | neutral | RAL8022 | 10 pcs |
| | ZHGA0080-02401_ | neutral | EV1/EV1 | 1 pc |
| | ZHGA0080-02402_ | neutral | EV1/EV1 | 10 pcs |
| | ZHGA0080-0H402_ | neutral | F9 titan m dark | 10 pcs |

## Technical information

| Part number | Description | Dimensions (mm)<br>A |
|---|---|---|
| ZHGD0020-... | handle GLOBE DKN 35 | 35 |
| ZHGD0030-... | handle GLOBE DKN 40 | - |

- Push-to-open
- Makes it difficult to twist the square spindle and thereby to move the window drive from the outside
- Lug diameter 10 mm
- Dimension A = spindle length
- Lug diameter 12 mm and alternative spindle lengths available upon request

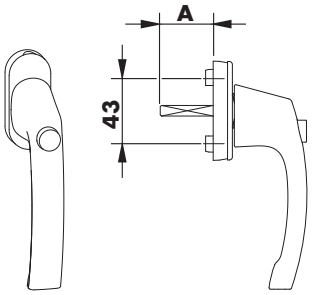


## Sales information

| Description | Part number | Surface | Colour | Box quantity |
|---|---|---|---|---|
| handle GLOBE DKN 35 | ZHGD0020-00401_ | neutral | RAL9016 | 1 pc |
| | ZHGD0020-00402_ | neutral | RAL9016 | 10 pcs |
| | ZHGD0020-02401_ | neutral | EV1/EV1 | 1 pc |
| | ZHGD0020-02402_ | neutral | EV1/EV1 | 10 pcs |
| | ZHGD0020-0H402_ | neutral | F9 titan m dark | 10 pcs |
| handle GLOBE DKN 40 | ZHGD0030-00401_ | neutral | RAL9016 | 1 pc |
| | ZHGD0030-00402_ | neutral | RAL9016 | 10 pcs |
| | ZHGD0030-01201_ | neutral | RAL8022 | 1 pc |
| | ZHGD0030-01202_ | neutral | RAL8022 | 10 pcs |
| | ZHGD0030-02401_ | neutral | EV1/EV1 | 1 pc |
| | ZHGD0030-02402_ | neutral | EV1/EV1 | 10 pcs |
| | ZHGD0030-0H401_ | neutral | F9 titan m dark | 1 pc |
| | ZHGD0030-0H402_ | neutral | F9 titan m dark | 10 pcs |

## Technical information

| Part number | Description | Dimensions (mm)<br>A |
|---|---|---|
| ZHGT0010-... | handle GLOBE TBT40 31 | 31 |
| ZHGT0020-... | handle GLOBE TBT40 35 | 35 |
| ZHGT0030-... | handle GLOBE TBT40 40 | - |

- Lockable for TBT operation = TILT before TURN
- 40 Nm resistance against breaking and tearing
- Turn-mode to be unlocked separately = child safety lock
- Lug diameter 10 mm
- Dimension A = spindle length
- Lug diameter 12 mm and alternative spindle lengths available upon request

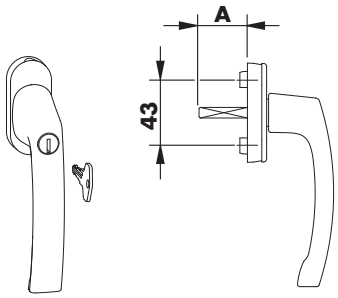


## Sales information

| Description | Part number | Surface | Colour | Box quantity |
|---|---|---|---|---|
| handle GLOBE TBT40 31 | ZHGT0010-0H401_ | neutral | F9 titan m dark | 1 pc |
| | ZHGT0010-0H402_ | neutral | F9 titan m dark | 10 pcs |
| handle GLOBE TBT40 35 | ZHGT0020-00401_ | neutral | RAL9016 | 1 pc |
| | ZHGT0020-00402_ | neutral | RAL9016 | 10 pcs |
| | ZHGT0020-02401_ | neutral | EV1/EV1 | 1 pc |
| | ZHGT0020-02402_ | neutral | EV1/EV1 | 10 pcs |
| | ZHGT0020-0H401_ | neutral | F9 titan m dark | 1 pc |
| | ZHGT0020-0H402_ | neutral | F9 titan m dark | 10 pcs |
| handle GLOBE TBT40 40 | ZHGT0030-00401_ | neutral | RAL9016 | 1 pc |
| | ZHGT0030-00402_ | neutral | RAL9016 | 10 pcs |
| | ZHGT0030-01201_ | neutral | RAL8022 | 1 pc |
| | ZHGT0030-01202_ | neutral | RAL8022 | 10 pcs |

## Technical information

| Part number | Description | Dimensions (mm)<br>A |
|---|---|---|
| ZHGL0020-... | handle GLOBE SP 35 | 35 |

- 45° click-in position for night vent
- Lug diameter 10 mm
- Dimension A = spindle length
- Lug diameter 12 mm and alternative spindle lengths available upon request

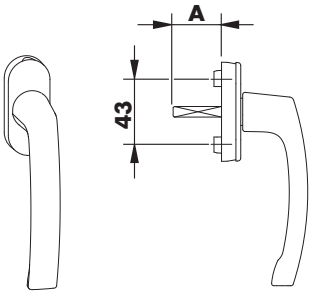




## Sales information

| Description | Part number | Surface | Colour | Box quantity |
|---|---|---|---|---|
| handle GLOBE SP 35 | ZHGL0020-02401_ | neutral | EV1/EV1 | 1 pc |
| | ZHGL0020-02406_ | neutral | EV1/EV1 | 100 pcs |

## Technical information

| Part number | Description | Dimensions (mm)<br>A |
|---|---|---|
| ZHGN0010-... | handle globe detatachable 45 | 45 |
| ZHGR0030-... | rose GLOBE .. | - |

- Lug diameter 10 mm
- Lug diameter 12 mm available upon request

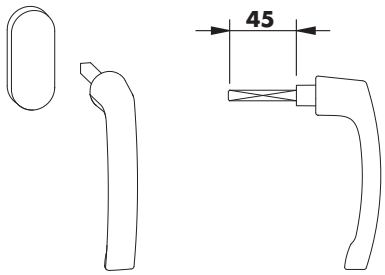


## Sales information

| Description | Part number | Surface | Colour | Box quantity |
|---|---|---|---|---|
| handle globe detatachable 45 | ZHGN0010-00401_ | neutral | RAL9016 | 1 pc |
| | ZHGN0010-00402_ | neutral | RAL9016 | 10 pcs |
| rose GLOBE .. | ZHGR0030-00401_ | neutral | RAL9016 | 1 pc |
| | ZHGR0030-00402_ | neutral | RAL9016 | 10 pcs |
| | ZHGR0030-0H401_ | neutral | F9 titan m dark | 1 pc |
| | ZHGR0030-0H402_ | neutral | F9 titan m dark | 10 pcs |

## Technical information

| Part number | Description |
|---|---|
| ZMZP0030-... | accessories TL/PZ PD 55-64mm |
| ZMZP0020-... | accessories TL/PZ PD 65-74mm |
| ZMZP0010-... | accessories TL/PZ PD 75-84mm |
| ZMZP0040-... | accessories TL/PZ PD 85-94mm |
| ZMGP0010-... | handle GLOBE TL/PZ |

- Lug diameter 10 mm
- Suitable for standard profile cylinders
- * Contents of bag accessories TL/PZ

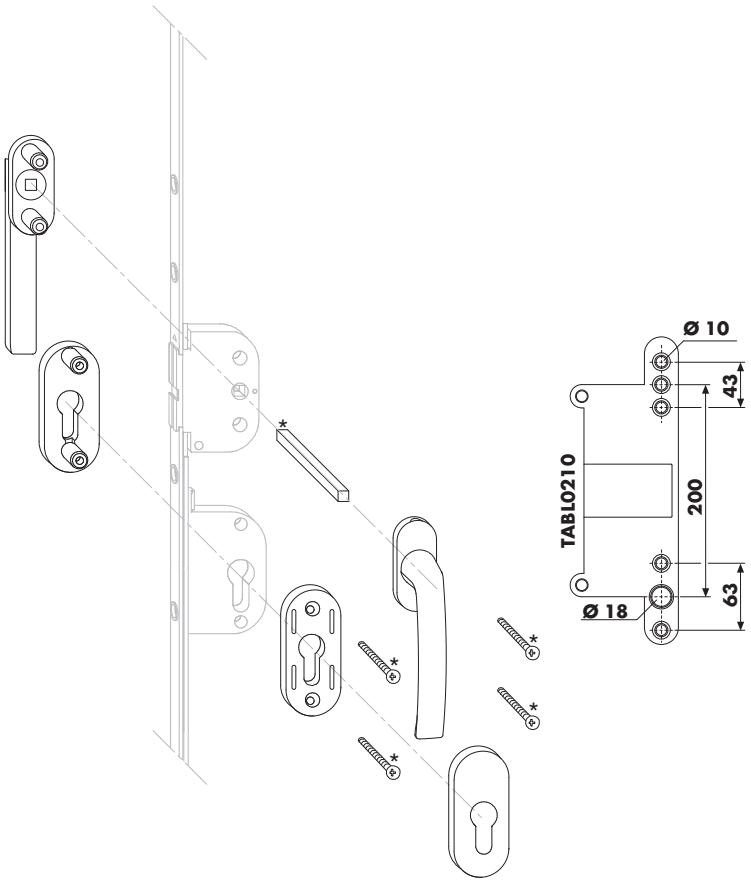


## Sales information

| Description | Part number | Surface | Colour | Box quantity |
|---|---|---|---|---|
| accessories TL/PZ PD 55-64mm | ZMZP0030-10001_ | Titan Silver | without | 1 pc |
| accessories TL/PZ PD 65-74mm | ZMZP0020-10001_ | Titan Silver | without | 1 pc |
| accessories TL/PZ PD 75-84mm | ZMZP0010-10001_ | Titan Silver | without | 1 pc |
| accessories TL/PZ PD 85-94mm | ZMZP0040-10001_ | Titan Silver | without | 1 pc |
| handle GLOBE TL/PZ | ZMGP0010-00401_ | neutral | RAL9016 | 1 pc |
| | ZMGP0010-00402_ | neutral | RAL9016 | 10 pcs |
| | ZMGP0010-02401_ | neutral | EV1/EV1 | 1 pc |
| | ZMGP0010-02402_ | neutral | EV1/EV1 | 10 pcs |
| | ZMGP0010-0H401_ | neutral | F9 titan m dark | 1 pc |
| | ZMGP0010-0H402_ | neutral | F9 titan m dark | 10 pcs |
| | ZMGP0010-0K602_ | neutral | F4 bronze | 10 pcs |
| | ZMGP0010-0K601_ | neutral | F4 bronze | 10 pcs |

## Technical information

| Part number | Description |
|---|---|
| ZMZP0030-... | accessories TL/PZ PD 55-64mm |
| ZMZP0020-... | accessories TL/PZ PD 65-74mm |
| ZMZP0010-... | accessories TL/PZ PD 75-84mm |
| ZMZP0040-... | accessories TL/PZ PD 85-94mm |
| ZMGP0020-... | handle globe TL/PZ ext flat |

- Lug diameter 10 mm
- Suitable for standard profile cylinders
- * Contents of bag accessories TL/PZ
- Total height of the handle outside = 25 mm

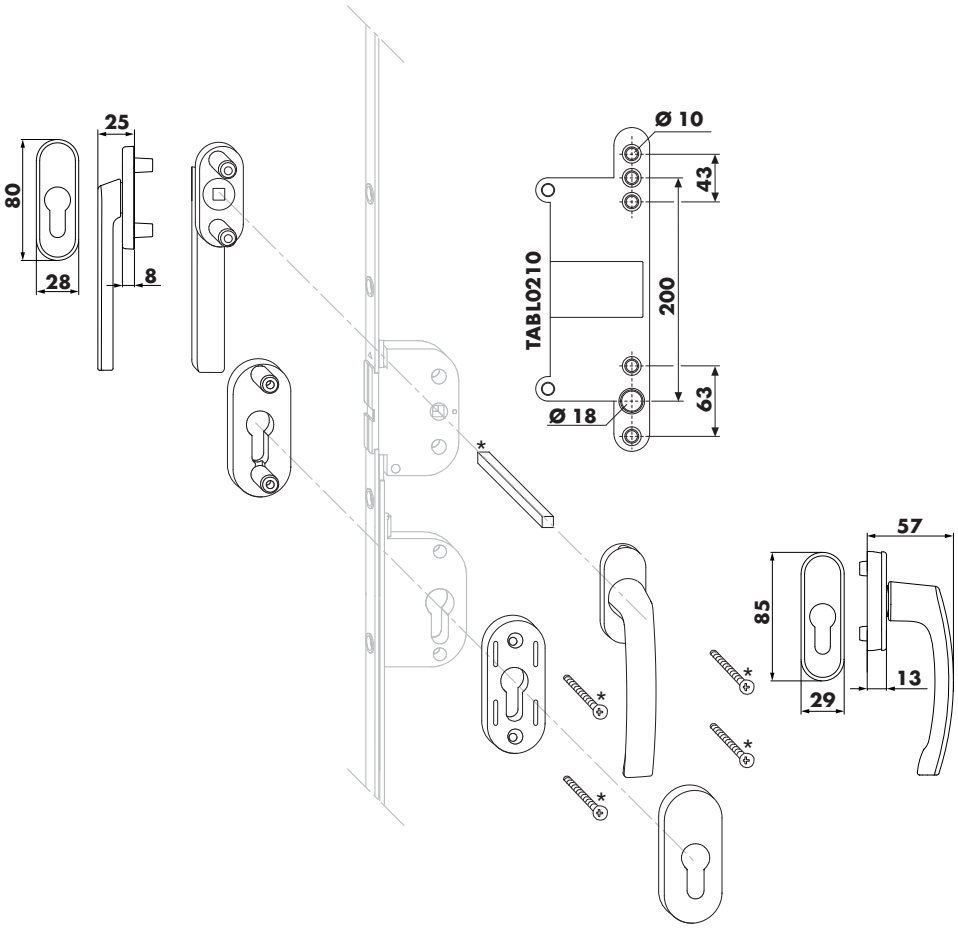


## Sales information

| Description | Part number | Surface | Colour | Box quantity |
|---|---|---|---|---|
| accessories TL/PZ PD 55-64mm | ZMZP0030-10001_ | Titan Silver | without | 1 pc |
| accessories TL/PZ PD 65-74mm | ZMZP0020-10001_ | Titan Silver | without | 1 pc |
| accessories TL/PZ PD 75-84mm | ZMZP0010-10001_ | Titan Silver | without | 1 pc |
| accessories TL/PZ PD 85-94mm | ZMZP0040-10001_ | Titan Silver | without | 1 pc |
| handle globe TL/PZ ext flat | ZMGP0020-00401_ | neutral | RAL9016 | 1 pc |
| | ZMGP0020-00402_ | neutral | RAL9016 | 10 pcs |
| | ZMGP0020-01202_ | neutral | RAL8022 | 10 pcs |
| | ZMGP0020-02402_ | neutral | EV1/EV1 | 10 pcs |
| | ZMGP0020-0H402_ | neutral | F9 titan m dark | 10 pcs |
| | ZMGP0020-0K602_ | neutral | F4 bronze | 10 pcs |

| Description | Material | Page |
|---|---|---|
| handle Si-line | 872130, 844052, 853856, 868973, ZHSS0030 | 6.3 - 2 |
| handle Si-line SI-AU | ZHSS3160, 893951 | 6.3 - 4 |
| handle Si-line lockable | 852392, 862575, ZHSA3020 | 6.3 - 5 |
| handle Si-line lockable TBT | 873700, 873724 | 6.3 - 6 |
| handle Si-line SP | 871119 | 6.3 - 7 |
| handle Si-line flat | 892473 | 6.3 - 8 |
| handle SI w/o square spindle | 853368 | 6.3 - 9 |
| handle SIAU w/o square spindle | ZHSO3000 | 6.3 - 10 |
| handle Si-line TL/PZ | ZMZP0030, ZMZP0020, ZMZP0010, ZMZP0040, 871423 | 6.3 - 11 |
| flat handle Si-line TL/PZ | ZMZP0030, ZMZP0020, ZMZP0010, ZMZP0040, 870488 | 6.3 - 12 |
| rose Si-line | 862605, ZHAN0010 | 6.3 - 14 |

## Technical information

| Part number | Description | |
|---|---|---|
| 872130 | handle Si-line 26 | 2 |
| 844052 | handle Si-line 31 | 2 |
| 853856 | handle Si-line 35 | 2 |
| 868973 | handle Si-line 40 | 2 |
| ZHSS0030-... | handle Si-line 45 | 2 |

- Lug diameter 12mm
- Dimension A = spindle length

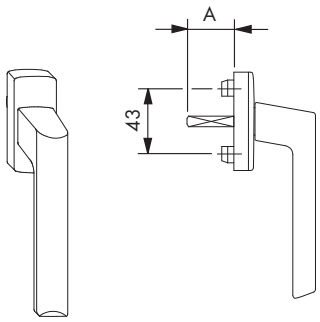

## Sales information

| Description | Part number | Surface | Colour | Box quantity |
|---|---|---|---|---|
| handle Si-line 26 | 872130 | neutral | RAL9016 | 1 pc |
| | 259078 | neutral | RAL9016 | 10 pcs |
| | 872123 | neutral | EV1/EV1 | 1 pc |
| | 259061 | neutral | EV1/EV1 | 10 pcs |
| handle Si-line 31 | 844052 | neutral | RAL9003 | 1 pc |
| | 234990 | neutral | RAL9003 | 100 pcs |
| | 844069 | neutral | RAL8019 | 1 pc |
| | 235003 | neutral | RAL8019 | 100 pcs |
| | 864715 | neutral | EV1/EV1 | 1 pc |
| | 252314 | neutral | EV1/EV1 | 100 pcs |
| | 869024 | neutral | EV2 champagne | 1 pc |
| | ZHSS0010-02601_ | neutral | EV2 champagne | 1 pc |
| | ZHSS0010-02605_ | neutral | EV2 champagne | 50 pcs |
| | 239070 | neutral | EV2 champagne | 100 pcs |
| | 848647 | neutral | titan m bright | 1 pc |
| | 238981 | neutral | titan m bright | 100 pcs |
| | 848654 | neutral | matt gold | 1 pc |
| | 238998 | neutral | matt gold | 100 pcs |
| handle Si-line 35 | 853856 | neutral | RAL9003 | 1 pc |
| | 243947 | neutral | RAL9003 | 100 pcs |
| | 853863 | neutral | RAL8019 | 1 pc |
| | 243954 | neutral | RAL8019 | 100 pcs |
| | 895986 | neutral | RAL8022 | 1 pc |
| | 307250 | neutral | RAL8022 | 100 pcs |
| | 869055 | neutral | EV1/EV1 | 1 pc |
| | 256473 | neutral | EV1/EV1 | 100 pcs |
| | 869352 | neutral | EV2 champagne | 1 pc |
| | 256756 | neutral | EV2 champagne | 100 pcs |
| | 869079 | neutral | titan m bright | 1 pc |
| | 256497 | neutral | titan m bright | 100 pcs |
| | 869086 | neutral | matt gold | 1 pc |
| | 256503 | neutral | matt gold | 100 pcs |
| handle Si-line 40 | 868973 | neutral | RAL9003 | 1 pc |
| | 256374 | neutral | RAL9003 | 100 pcs |
| | ZHSS3210-03401_ | neutral | titan m bright | 1 pc |
| | ZHSS3210-03406_ | neutral | titan m bright | 100 pcs |
| handle Si-line 45 | ZHSS0030-00201_ | neutral | RAL9003 | 1 pc |
| | ZHSS0030-00206_ | neutral | RAL9003 | 100 pcs |
| | ZHSS0030-01206_ | neutral | RAL8022 | 100 pcs |
| | ZHSS0030-02401_ | neutral | EV1/EV1 | 1 pc |
| | ZHSS0030-02406_ | neutral | EV1/EV1 | 100 pcs |

## Technical information

| Part number | Description | |
|---|---|---|
| ZHSS3160-... | handle Si-line 31 | 2 |
| 893951 | handle Si-line 35 | 2 |

- With SIEGENIA logo on the cover plate
- Lug diameter 12mm
- Dimension A = spindle length

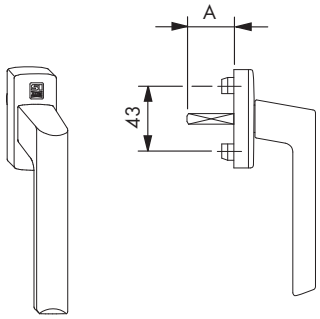


## Sales information

| Description | Part number | Surface | Colour | Box quantity |
|---|---|---|---|---|
| handle Si-line 31 | ZHSS3160-00201_ | neutral | RAL9003 | 1 pc |
| | ZHSS3160-00206_ | neutral | RAL9003 | 100 pcs |
| handle Si-line 35 | 893951 | neutral | RAL9003 | 1 pc |
| | 303238 | neutral | RAL9003 | 100 pcs |
| | 893968 | neutral | RAL8019 | 1 pc |

## Technical information

| Part number | Description | |
|---|---|---|
| 852392 | handle Si-line lockable 31 | 2 |
| 862575 | handle Si-line lockable 35 | 2 |
| ZHSA3020-... | handle Si-line lockable 40 | - |

- 100 Nm resistance against breaking and tearing according to DIN EN 1627
- Lug diameter 12mm
- Dimension A = spindle length

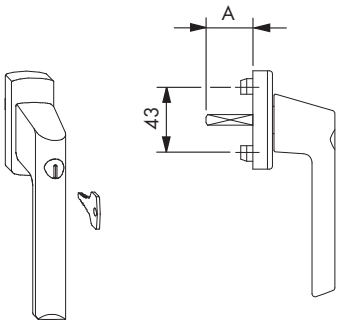


## Sales information

| Description | Part number | Surface | Colour | Box quantity |
|---|---|---|---|---|
| handle Si-line lockable 31 | 852392 | neutral | RAL9003 | 1 pc |
| | 242629 | neutral | RAL9003 | 10 pcs |
| | 852408 | neutral | RAL8019 | 1 pc |
| | 242636 | neutral | RAL8019 | 10 pcs |
| | 868249 | neutral | EV1/EV1 | 1 pc |
| | 255902 | neutral | EV1/EV1 | 10 pcs |
| | 861783 | neutral | EV2 champagne | 1 pc |
| | 249734 | neutral | EV2 champagne | 10 pcs |
| | 861776 | neutral | titan m bright | 1 pc |
| | 249727 | neutral | titan m bright | 10 pcs |
| | 861790 | neutral | matt gold | 1 pc |
| | 249741 | neutral | matt gold | 10 pcs |
| handle Si-line lockable 35 | 862575 | neutral | RAL9003 | 1 pc |
| | 250471 | neutral | RAL9003 | 10 pcs |
| | 862582 | neutral | RAL8019 | 1 pc |
| | 250488 | neutral | RAL8019 | 10 pcs |
| | 880647 | neutral | EV1/EV1 | 1 pc |
| | 268360 | neutral | EV1/EV1 | 10 pcs |
| | 900567 | neutral | titan m bright | 1 pc |
| | 316740 | neutral | titan m bright | 10 pcs |
| handle Si-line lockable 40 | ZHSA3020-00202_ | neutral | RAL9003 | 10 pcs |
| | ZHSA3020-03401_ | neutral | titan m bright | 1 pc |
| | ZHSA3020-03402_ | neutral | titan m bright | 10 pcs |

## Technical information

| Part number | Description | |
|---|---|---|
| 873700 | handle Si-line lockable/TBT 31 | 2 |
| 873724 | handle Si-line lockable/TBT 35 | 2 |

- 100 Nm resistance against breaking and tearing according to DIN EN 1627
- Lockable for increased security
- Lockable for TBT operation = TILT before TURN
- Lug diameter 12mm
- Dimension A = spindle length

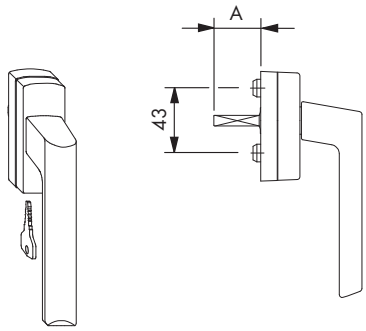


## Sales information

| Description | Part number | Surface | Colour | Box quantity |
|---|---|---|---|---|
| handle Si-line lockable/TBT 31 | 873700 | neutral | RAL9003 | 1 pc |
| | 260258 | neutral | RAL9003 | 10 pcs |
| | 880258 | neutral | EV1/EV1 | 1 pc |
| | 267776 | neutral | EV1/EV1 | 10 pcs |
| | 879153 | neutral | titan m bright | 1 pc |
| | 266601 | neutral | titan m bright | 10 pcs |
| handle Si-line lockable/TBT 35 | 873724 | neutral | RAL9003 | 1 pc |
| | 260272 | neutral | RAL9003 | 10 pcs |
| | 260289 | neutral | RAL8019 | 10 pcs |
| | 880272 | neutral | EV1/EV1 | 1 pc |
| | 267790 | neutral | EV1/EV1 | 10 pcs |

## Technical information

| Part number | Description | |
|---|---|---|
| 871119 | handle Si-line SP 35 | 2 |

- Additional click-in position at 45°
- For integrated night vent
- Lug diameter 12mm
- Dimension A = spindle length

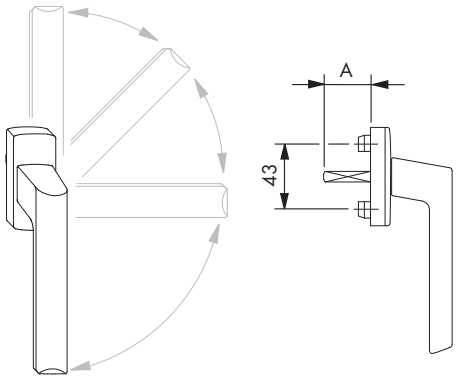


## Sales information

| Description | Part number | Surface | Colour | Box quantity |
|---|---|---|---|---|
| handle Si-line SP 35 | 871119 | neutral | RAL9003 | 1 pc |
| | 258279 | neutral | RAL9003 | 100 pcs |

## Technical information

| Part number | Description | |
|---|---|---|
| 892473 | handle Si-line flat 35 | 2 |

- Lug diameter 12mm
- Dimension A = spindle length

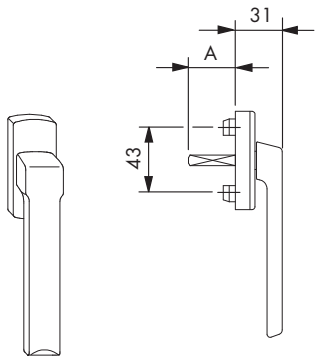


## Sales information

| Description | Part number | Surface | Colour | Box quantity |
|---|---|---|---|---|
| handle Si-line flat 35 | 892473 | neutral | RAL9003 | 1 pc |
| | 300510 | neutral | RAL9003 | 10 pcs |
| | 892428 | neutral | EV1/EV1 | 1 pc |
| | 300466 | neutral | EV1/EV1 | 10 pcs |

## Technical information

| Part number | Description | |
|---|---|---|
| 853368 | handle Si-line no spindle | 2 |

- Suitable for use with Kardan
- Lug diameter 12mm

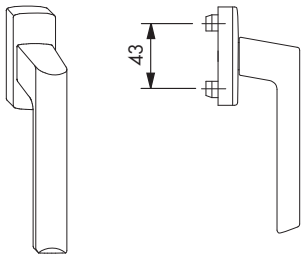


## Sales information

| Description | Part number | Surface | Colour | Box quantity |
|---|---|---|---|---|
| handle Si-line no spindle | 853368 | neutral | RAL9003 | 1 pc |
| | 252345 | neutral | RAL9003 | 100 pcs |
| | 853375 | neutral | RAL8019 | 1 pc |
| | 869314 | neutral | EV1/EV1 | 1 pc |
| | 870518 | neutral | titan m bright | 1 pc |
| | 870525 | neutral | matt gold | 1 pc |

## Technical information

| Part number | Description |
|---|---|
| ZHSO3000-... | handle Si-line no spindle |

- With SIEGENIA logo on the cover plate
- Suitable for use with Kardan
- Lug diameter 12mm

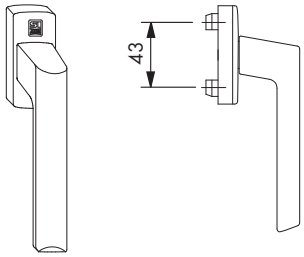


## Sales information

| Description | Part number | Surface | Colour | Box quantity |
|---|---|---|---|---|
| handle Si-line no spindle | ZHSO3000-00201_ | neutral | RAL9003 | 1 pc |
| | ZHSO3000-00206_ | neutral | RAL9003 | 100 pcs |
| | ZHSO3000-01101_ | neutral | RAL8019 | 1 pc |
| | ZHSO3000-01106_ | neutral | RAL8019 | 100 pcs |

## Technical information

| Part number | Description |
|---|---|
| ZMZP0030-... | accessories TL/PZ PD 55-64mm |
| ZMZP0020-... | accessories TL/PZ PD 65-74mm |
| ZMZP0010-... | accessories TL/PZ PD 75-84mm |
| ZMZP0040-... | accessories TL/PZ PD 85-94mm |
| 871423 | bag handle SI-LINE TL/PZ |

- Lug diameter 12mm
- Suitable for standard profile cylinders
- * Contents of bag accessories TL/PZ

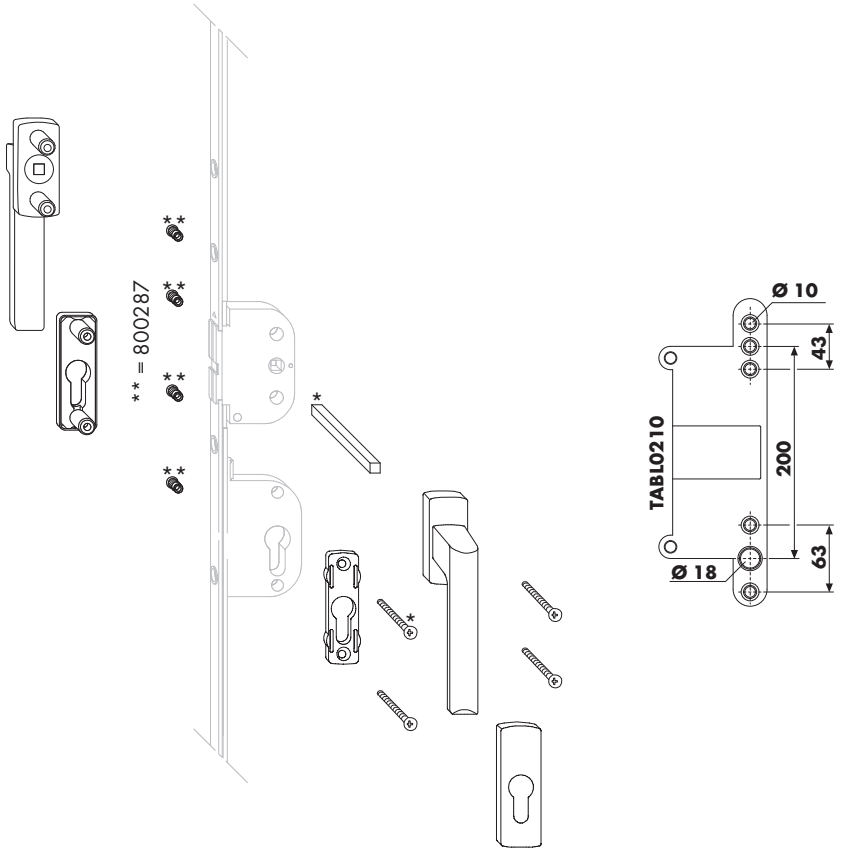


## Sales information

| Description | Part number | Surface | Colour | Box quantity |
|---|---|---|---|---|
| accessories TL/PZ PD 55-64mm | ZMZP0030-10001_ | Titan Silver | without | 1 pc |
| accessories TL/PZ PD 65-74mm | ZMZP0020-10001_ | Titan Silver | without | 1 pc |
| accessories TL/PZ PD 75-84mm | ZMZP0010-10001_ | Titan Silver | without | 1 pc |
| accessories TL/PZ PD 85-94mm | ZMZP0040-10001_ | Titan Silver | without | 1 pc |
| bag handle SI-LINE TL/PZ | 871423 | neutral | RAL9003 | 1 pc |
| | 258538 | neutral | RAL9003 | 10 pcs |
| | 871430 | neutral | RAL8019 | 1 pc |
| | 258545 | neutral | RAL8019 | 10 pcs |
| | 871379 | neutral | Si-silver | 1 pc |
| | 258484 | neutral | Si-silver | 10 pcs |
| | 871393 | neutral | titan m bright | 1 pc |
| | 258507 | neutral | titan m bright | 10 pcs |

## Technical information

| Part number | Description |
|---|---|
| ZMZP0030-... | accessories TL/PZ PD 55-64mm |
| ZMZP0020-... | accessories TL/PZ PD 65-74mm |
| ZMZP0010-... | accessories TL/PZ PD 75-84mm |
| ZMZP0040-... | accessories TL/PZ PD 85-94mm |
| 870488 | bag handle SI-LINE TL/PZ flat |

- Lug diameter 12mm
- Suitable for standard profile cylinders
- * Contents of bag accessories TL/PZ

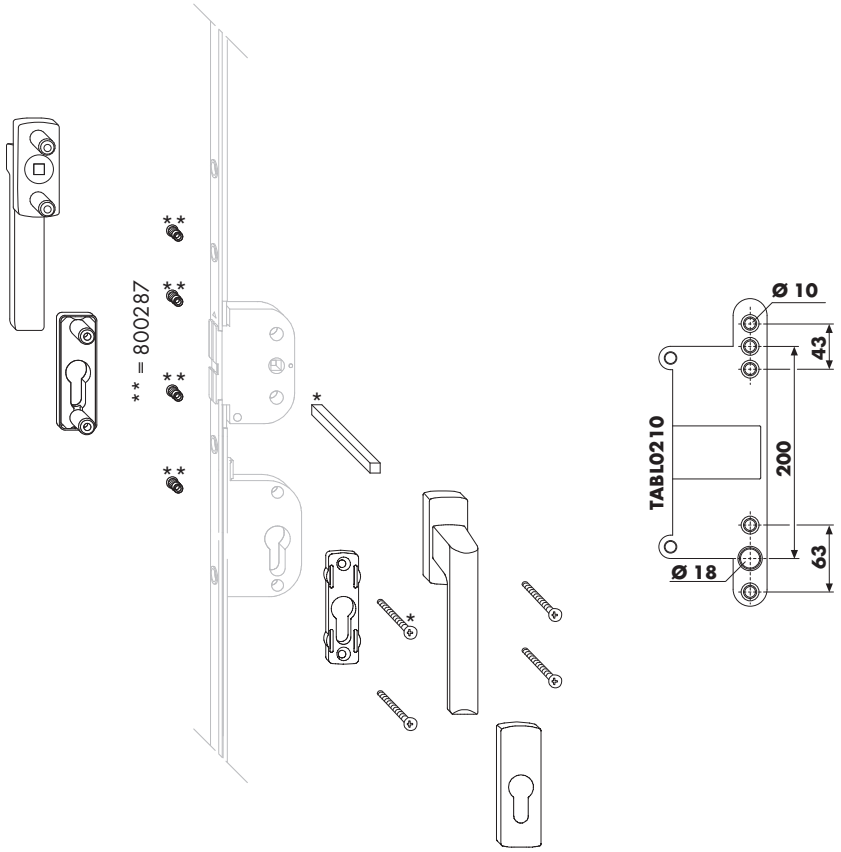


## Sales information

| Description | Part number | Surface | Colour | Box quantity |
|---|---|---|---|---|
| accessories TL/PZ PD 55-64mm | ZMZP0030-10001_ | Titan Silver | without | 1 pc |
| accessories TL/PZ PD 65-74mm | ZMZP0020-10001_ | Titan Silver | without | 1 pc |
| accessories TL/PZ PD 75-84mm | ZMZP0010-10001_ | Titan Silver | without | 1 pc |
| accessories TL/PZ PD 85-94mm | ZMZP0040-10001_ | Titan Silver | without | 1 pc |
| bag handle SI-LINE TL/PZ flat | 870488 | neutral | RAL9003 | 1 pc |
| | 257944 | neutral | RAL9003 | 10 pcs |
| | 870495 | neutral | RAL8019 | 1 pc |
| | 257951 | neutral | RAL8019 | 10 pcs |
| | 870433 | neutral | EV1/EV1 | 1 pc |
| | 257890 | neutral | EV1/EV1 | 10 pcs |
| | 870457 | neutral | titan m bright | 1 pc |
| | 257913 | neutral | titan m bright | 10 pcs |

## Technical information

| Part number | Description | |
|---|---|---|
| 862605 | rose SI-LINE .. | - |
| ZHAN0010-... | handle Si-line detachable 45 | 0 |

- Combinable with removable handles
- Lug diameter 12mm

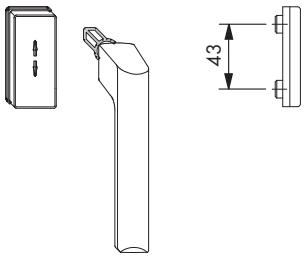


## Sales information

| Description | Part number | Surface | Colour | Box quantity |
|---|---|---|---|---|
| rose SI-LINE .. | 862605 | neutral | RAL9003 | 1 pc |
| | 250495 | neutral | RAL9003 | 10 pcs |
| | 869833 | neutral | RAL8019 | 1 pc |
| | 257418 | neutral | RAL8019 | 10 pcs |
| | 869826 | neutral | EV1/EV1 | 1 pc |
| | 257401 | neutral | EV1/EV1 | 10 pcs |
| | ZHSR0010-52301_ | alu | RAL9005 | 1 pc |
| | ZHSR0010-52302_ | alu | RAL9005 | 10 pcs |
| handle Si-line detachable 45 | ZHAN0010-00201_ | neutral | RAL9003 | 1 pc |
| | ZHAN0010-00204_ | neutral | RAL9003 | 25 pcs |
| | ZHAN0010-02401_ | neutral | EV1/EV1 | 1 pc |
| | ZHAN0010-02404_ | neutral | EV1/EV1 | 25 pcs |

| Description | Material | Page |
|---|---|---|
| striker plate 56 | - | 7 - 2 |
| striker plate S 56 | - | 7 - 3 |
| striker plate S 56 H | - | 7 - 4 |
| striker plate S(L)-RS | - | 7 - 5 |
| striker plate S(L)-RS WK2 BSO | - | 7 - 6 |
| tilt lock bearing 56 S(L)-RS | - | 7 - 7 |
| tilt lock bearing S-ES/SL-S FH | - | 7 - 8 |
| tilt lock bearing S-ES FH TBT | - | 7 - 9 |
| striker snapper | - | 7 - 10 |
| striker plate A0767 | TRSA0010 | 7 - 11 |
| striker plate BS 15° | 708873, 718438, 713389 | 7 - 12 |
| frame parts vent secure | - | 7 - 13 |
| frame part SP-S | - | 7 - 15 |
| shoot bolt | - | 7 - 16 |
| shoot bolt | - | 7 - 17 |
| shoot bolt A2000 | 716236, 701195, 701126 | 7 - 18 |
| shoot bolt | TFKR0040, TFKR0050 | 7 - 19 |
| shoot bolt | TFKR0060 | 7 - 20 |
| shoot bolt VSO | TFKR0080 | 7 - 22 |
| shoot bolt RSA 11 | TFKR0070 | 7 - 23 |
| snapper | - | 7 - 24 |

## Technical information

- Striker plate 56 profile-related, refer to PDB line item FRSB
- 1. Version for timber 12 mm systems
  2. Version for timber 4 mm systems
  3. Version for KF profile systems
- Made of a diecast material
- The depicted version are examples and may vary depending on the profile system.

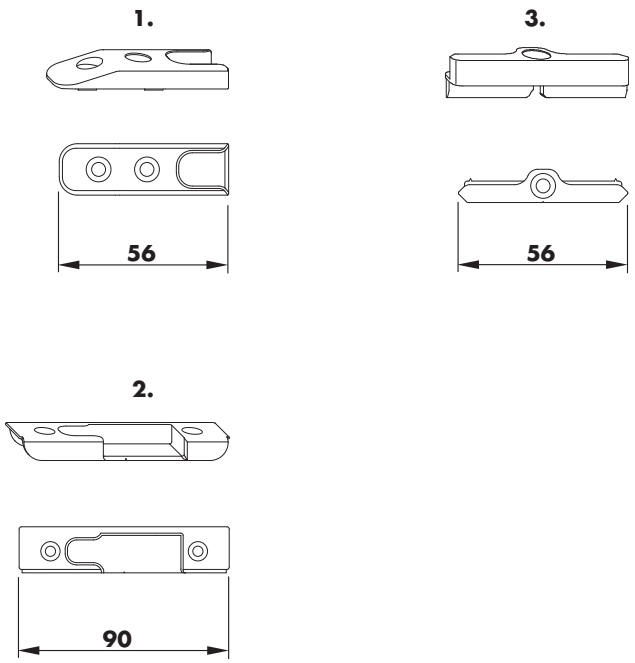

## Technical information

- Striker plate S 56 profile-related, refer to PDB line item TRSM
- PVC-steel variant
- The depicted version are examples and may vary depending on the profile system.

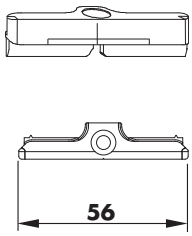

## Technical information

- Striker plate S 56 H profile-related, refer to PDB line item TRSN
- The depicted version are examples and may vary depending on the profile system.

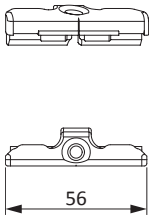

## Technical information

- Striker plate S(L)-RS profile-related, refer to PDB line item TRSK
- SL components are made of a special alloy diecast
- 1. Version for timber 12 mm systems
  2. Version for timber 4 mm systems
  3. Version for KF profile systems
- The depicted version are examples and may vary depending on the profile system.

**1.**

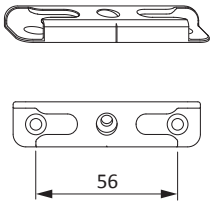


**3.**

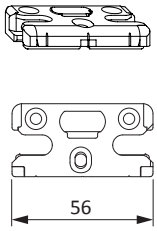


**2.**

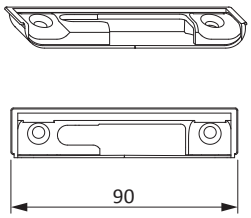

## Technical information

- Striker plate SL-RS WK2 BSO profile-related, refer to PDB line item TRSK03
- The depicted version are examples and may vary depending on the profile system.

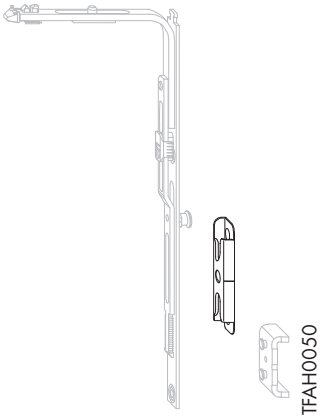

## Technical information

- Tilt lock bearing 56 S(L)-RS profile-related, refer to PDB line item TRKF
- 1. Version for timber 12 mm systems
  2. Version for KF profile systems
- SL components are made of a special alloy diecast
- The depicted version are examples and may vary depending on the profile system.

- **Please observe:**
  Guidelines/notes on the product and on liability (VHBH directive as well as the other applicable documents listed - directive can be downloaded at www.beschlagindustrie.de/ggsb/richtlinien.asp )
  Specifications from the profile manufacturers/system owners (PVC, light metal) or DIN 68 121 “Wooden profiles for windows and portal doors”

**1.**

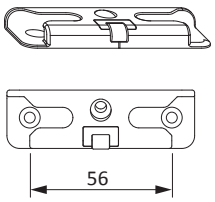


**2.**

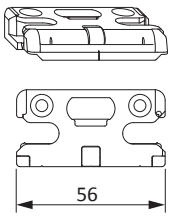

## Technical information

- Tilt lock bearing S-ES (SL-S) FH profile-related, refer to PDB line item FRKA (FRKJ)
- 1. Version for timber 12 mm systems
  2. Version for timber 4 mm systems
  3. Version for KF profile systems
- SL components are made of a special alloy diecast
- The depicted version are examples and may vary depending on the profile system.
- **Please observe:**
  Guidelines/notes on the product and on liability (VHBH directive as well as the other applicable documents listed - directive can be downloaded at www.beschlagindustrie.de/ggsb/richtlinien.asp )
  Specifications from the profile manufacturers/system owners (PVC, light metal) or DIN 68 121 “Wooden profiles for windows and portal doors”

**1.**

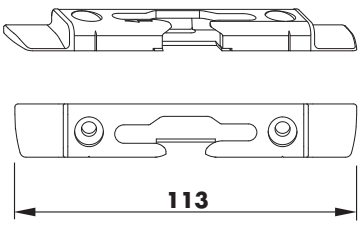


**3.**

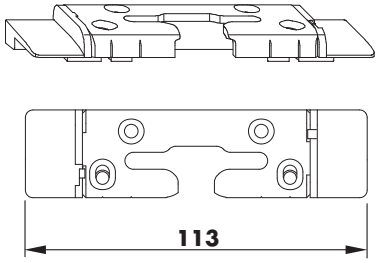


**2.**

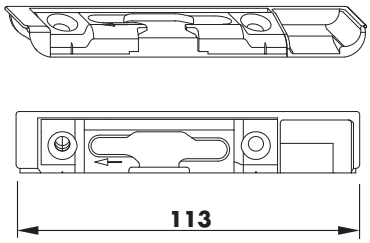

## Technical information

- Tilt lock bearing S-ES FH TBT profile-related, refer to PDB line item FRKB
- 1. Version for timber 12 mm systems
  2. Version for timber 4 mm systems
  3. Version for KF profile systems
- The depicted version are examples and may vary depending on the profile system.
- **Please observe:**
  Guidelines/notes on the product and on liability (VHBH directive as well as the other applicable documents listed - directive can be downloaded at www.beschlagindustrie.de/ggsb/richtlinien.asp )
  Specifications from the profile manufacturers/system owners (PVC, light metal) or DIN 68 121 “Wooden profiles for windows and portal doors”

**1.**

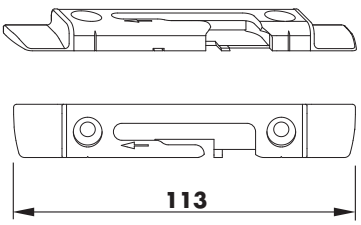


**3.**

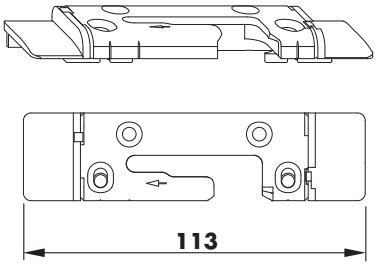


**2.**

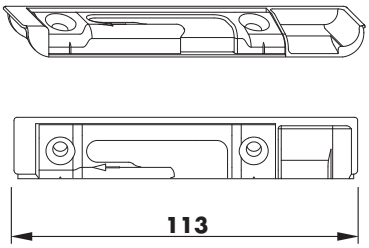

## Technical information

- Snapper striker profile-related, refer to PDB line item TRST
- The depicted version are examples and may vary depending on the profile system.

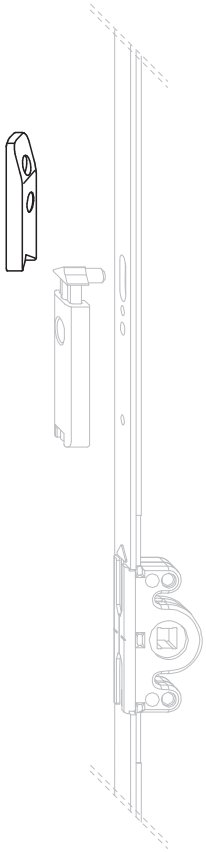

## Technical information

| Part number | Description | |
|---|---|---|
| TRSA0010-... | striker plate A0767 | 1 |

- For minimum window widths with a floating mullion

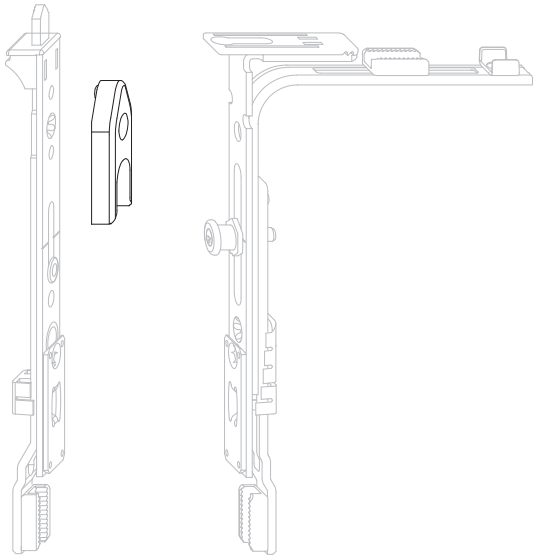

## Sales information

| Description | Part number | Surface | Colour | Box quantity |
|---|---|---|---|---|
| striker plate A0767 | TRSA0010-10001_ | Titan Silver | without | 1 pc |
| | TRSA0010-10005_ | Titan Silver | without | 50 pcs |

## Technical information

| Part number | Description | |
|---|---|---|
| 708873 | striker plate BS/15 degr. A0813 | 1 |
| 718438 | striker plate BS/15 degr. A1361 | 2 |

- 1. Version for timber 12 mm systems
  2. Version for KF profile systems
- Versions suitable for:
  A0380 = eurogroove 6/8x3
  A0807 = eurogroove 7/8x4
  A0813 = eurogroove 7/8x4
  A1361 = eurofold 18/8
  A0767/1 = opposing fitting groove with DSG gear
  A2000 = opposing fitting groove 12 mm cavity
- The depicted version are examples and may vary depending on the profile system.

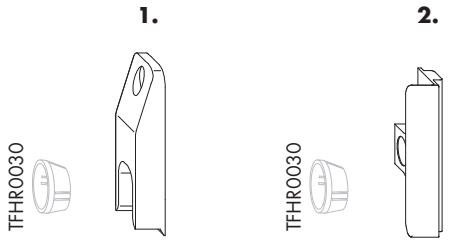


## Sales information

| Description | Part number | Surface | Colour | Box quantity |
|---|---|---|---|---|
| striker plate BS/15 degr. A0813 | 708873 | Titan Silver | without | 1 pc |
| | 285404 | Titan Silver | without | 500 pcs |
| striker plate BS/15 degr. A1361 | 718438 | Titan Silver | without | 1 pc |

## Technical information

- profile-related striker plate S-RS/KS, see PDB TRVS
- profile-related striker plate S-RS/KS-VS/BS, see PDB TRVS01
- TITAN vent secure: secure night vent
- with an opening width of max. 10 mm at the top a continuous air exchange is ensured and the window is protected against intruders (up to RC2) and driving rain even in the ventilation position
- Adjustment options striker plate S-RS/KS:
  1 maximum opening width 10.0 mm
  2 medium opening width 7.5 mm
  3 minimum opening width 5.0 mm
  a slider position moveable
  b slider position fixed
- The depicted version are examples and may vary depending on the profile system.
- **Please observe:**
  Guidelines/notes on the product and on liability (VHBH directive as well as the other applicable documents listed - directive can be downloaded at www.beschlagindustrie.de/ggsb/richtlinien.asp )
  Specifications from the profile manufacturers/system owners (PVC, light metal) or DIN 68 121 “Wooden profiles for windows and portal doors”

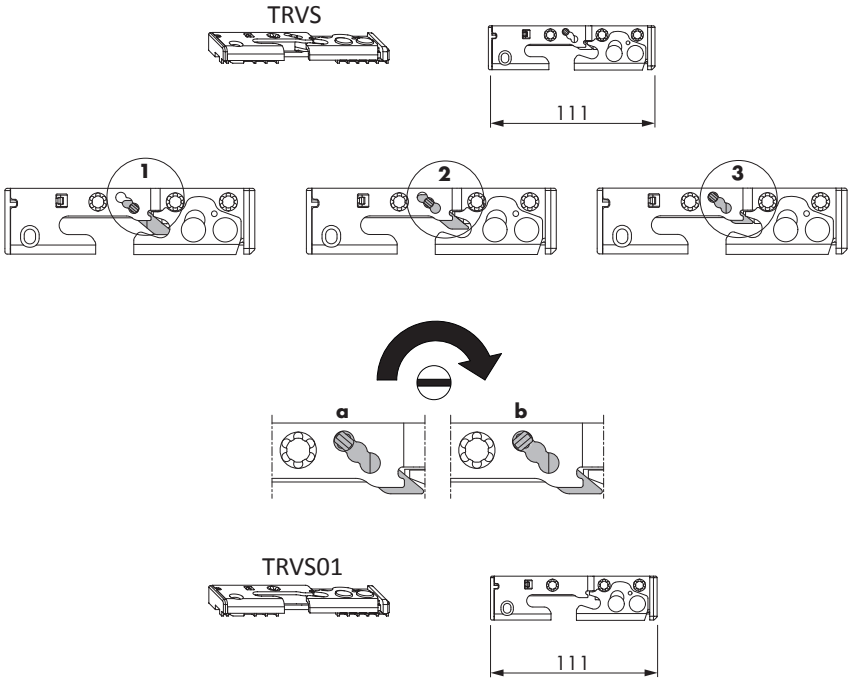

## Installation advice

- the additional S-RS striker plates must be placed horizontally at the bottom, so that the sash is even locked in the tilt position and lies flush on the seal. This is necessary so that intruder resistance and protection against driving rain are achieved

the striker plates S-RS/KS and S-RS/KS-VS/BS are placed central to the cam
TRVS = striker plate S-RS/KS (with slider), slider position 1
TRVS01 = striker plate S-RS/KS-VS/BS (without slider)

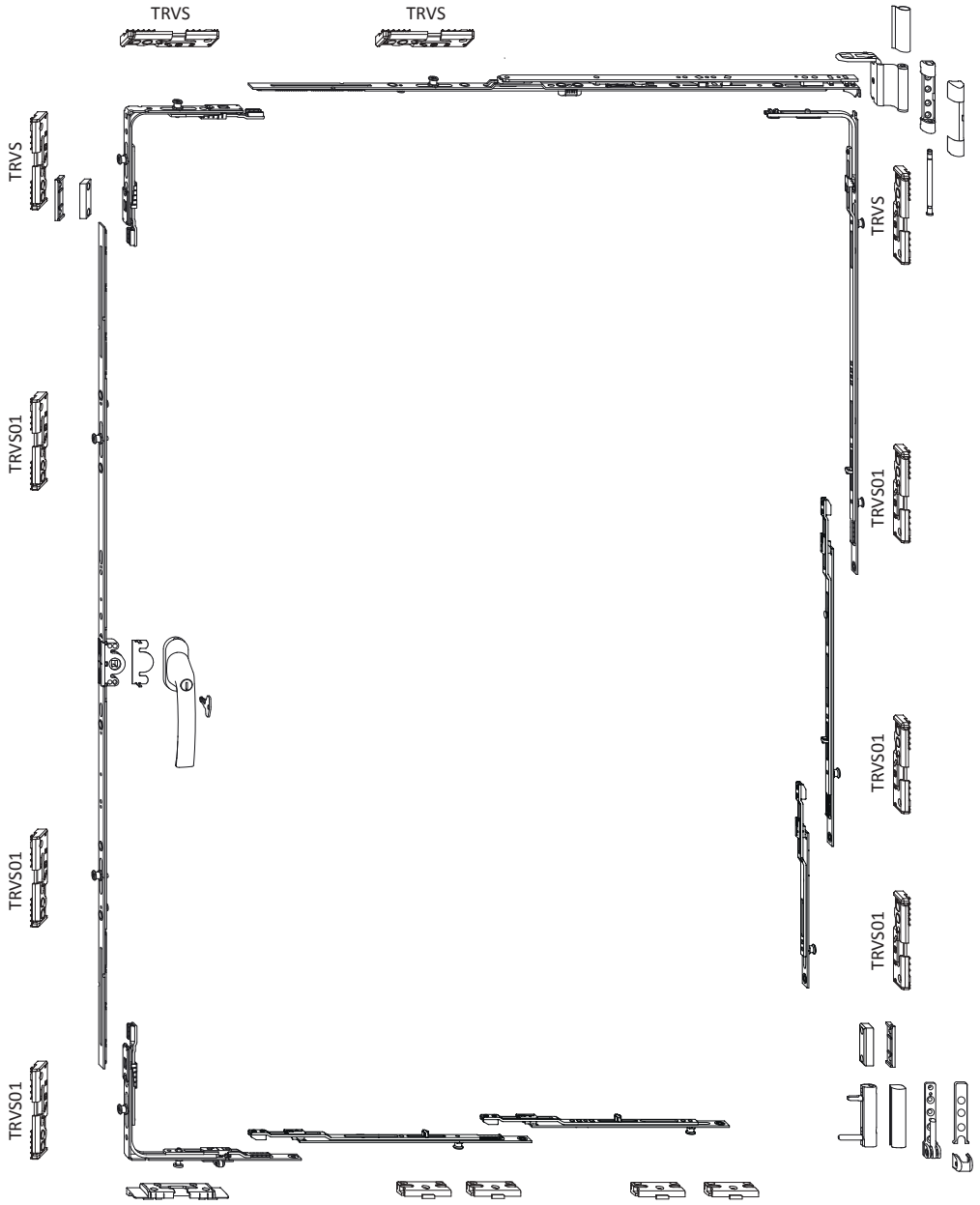

## Technical information

- Frame part SP-S profile-related, refer to PDB line item FRZL01
- The depicted version are examples and may vary depending on the profile system.

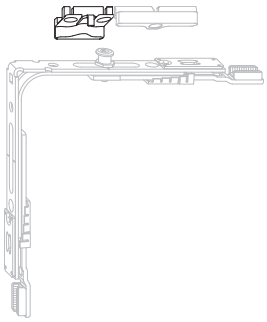

## Technical information

- Shoot bolt profile-related, refer to PDB line item FFKR
- For suitable strikers refer to PDB line item FRZV01
- Automatic locking of the shoot bolt lever as the master sash is closed against it
- The depicted version are examples and may vary depending on the profile system.

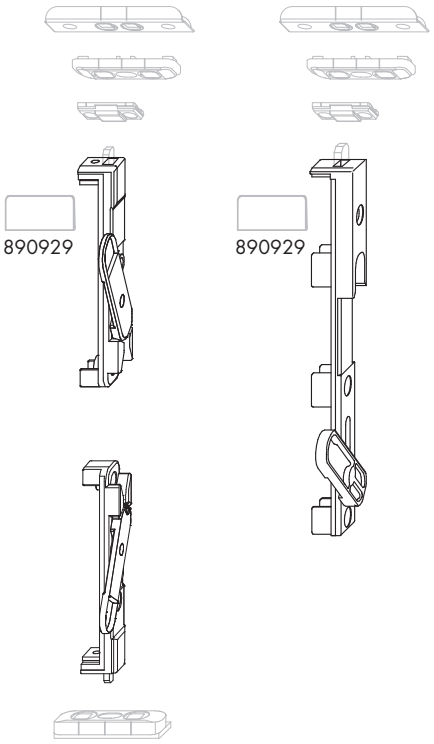

## Technical information

- Shoot bolt profile-related, refer to PDB line item FFKR
- For suitable strikers refer to PDB line item FRZV01
- Automatic locking of the shoot bolt lever as the master sash is closed against it
- The depicted version are examples and may vary depending on the profile system.

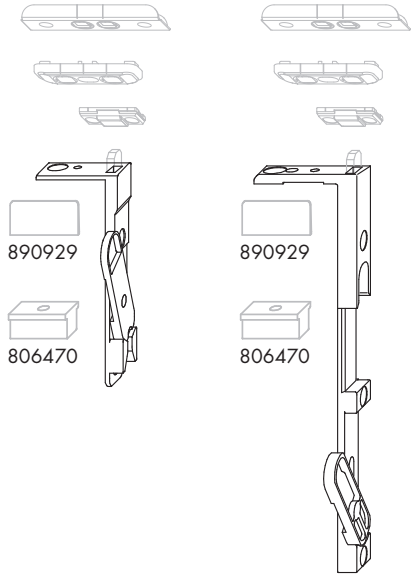

## Technical information

| Part number | Description | |
|---|---|---|
| 716236 | short shoot bolt A2000 | 2 |
| 701195 | shoot bolt VSO A2000 | 3 |
| 701126 | shoot bolt VSU A2000 | 3 |

- Use in slave sashes with opposing fitting groove
- Automatic locking of the protruded shootbolt by means of closing over the main sash
- Refer to the PDB for matching strikers
- 890929 Cover angle
- For basic security

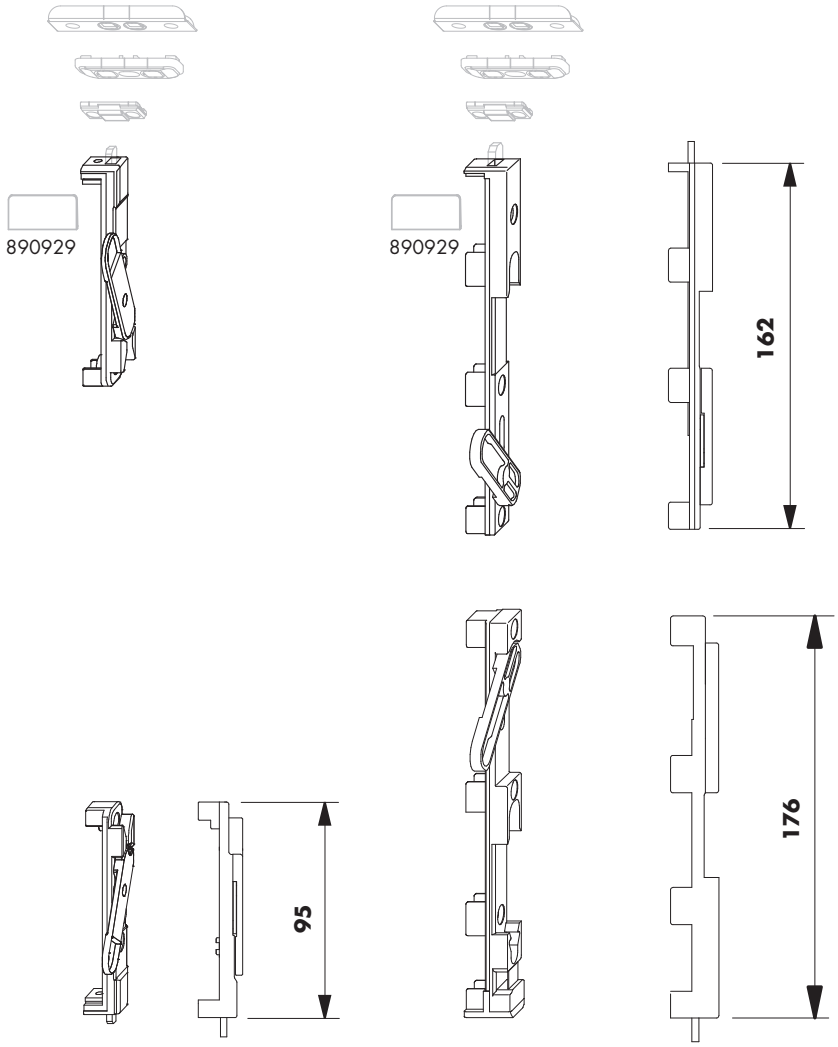


## Sales information

| Description | Part number | Surface | Colour | Box quantity |
|---|---|---|---|---|
| short shoot bolt A2000 | 716236 | Titan Silver | without | 1 pc |
| | 299623 | Titan Silver | without | 25 pcs |
| shoot bolt VSO A2000 | 701195 | Titan Silver | without | 1 pc |
| | 276501 | Titan Silver | without | 25 pcs |
| shoot bolt VSU A2000 | 701126 | Titan Silver | without | 1 pc |
| | 276433 | Titan Silver | without | 25 pcs |

## Technical information

| Part number | Description | Dimensions (mm) A | |
|---|---|---|---|
| TFKR0040-... | shoot bolt sz 1 RSA 14 | 234 | 3 |
| TFKR0050-... | shoot bolt sz 2 RSA 14 | 512 | 5 |

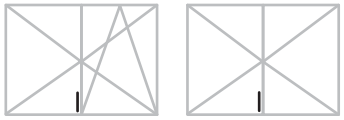

- Use in slave sashes with opposing fitting groove
- For suitable strikers refer to PDB line item FRZV01
- for RSA 14: if necessary, rework profiles in the rod throw section!
- For basic security
- Shootbolt sz 2 can be coupled

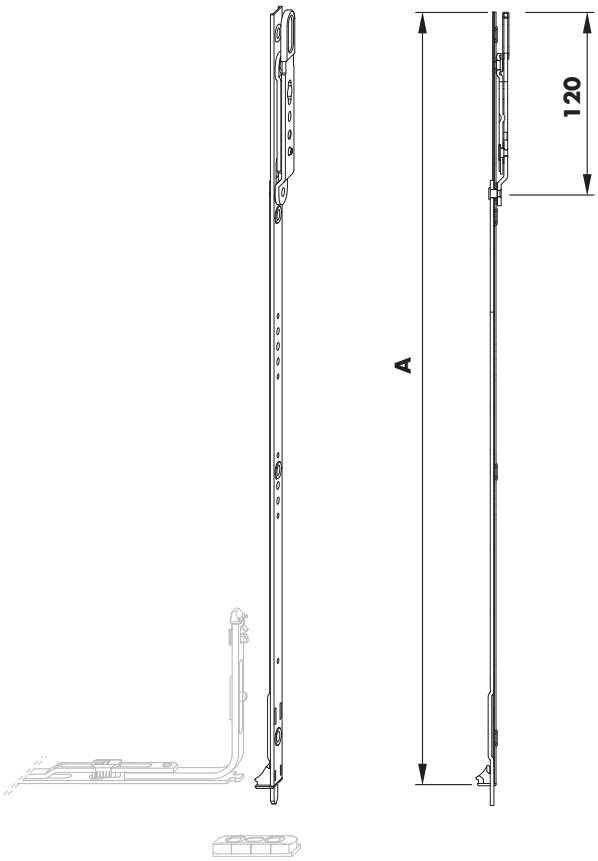


## Sales information

| Description | Part number | Surface | Colour | Box quantity |
|---|---|---|---|---|
| shoot bolt sz 1 RSA 14 | TFKR0040-10001_ | Titan Silver | without | 1 pc |
| | TFKR0040-10004_ | Titan Silver | without | 25 pcs |
| shoot bolt sz 2 RSA 14 | TFKR0050-10001_ | Titan Silver | without | 1 pc |
| | TFKR0050-10004_ | Titan Silver | without | 25 pcs |

## Technical information

| Part number | Description | Dimensions (mm)<br>A | |
|---|---|---|---|
| TFKR0060-... | shoot bolt sz 3 RSA 14 | 1247 | 8 |

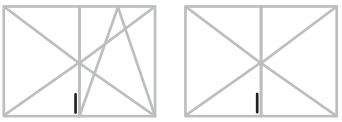

- Use in slave sashes with opposing fitting groove
- For suitable strikers refer to PDB line item FRZV01
- for RSA 14: if necessary, rework profiles in the rod throw section!
- For basic security
- Component can be coupled

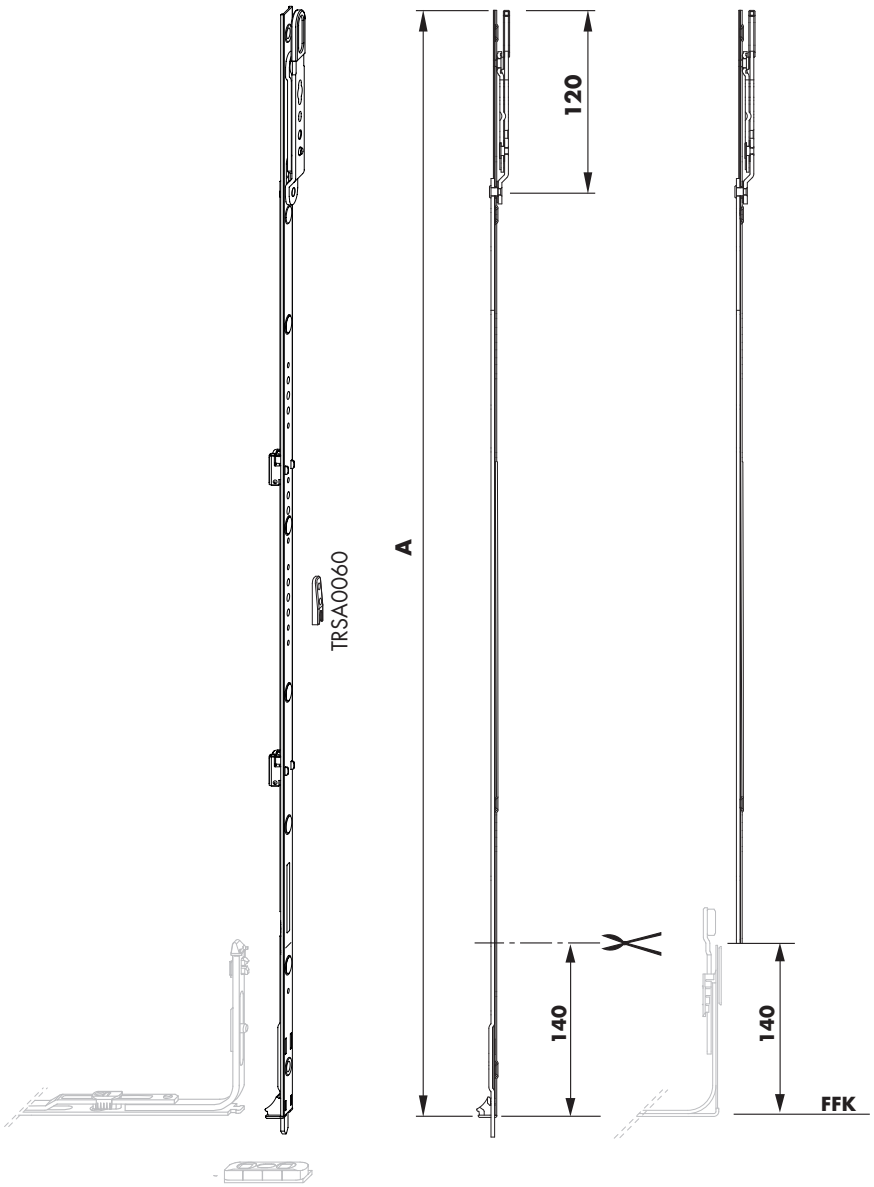

## Sales information

| Description | Part number | Surface | Colour | Box quantity |
|---|---|---|---|---|
| shoot bolt sz 3 RSA 14 | TFKR0060-10001_ | Titan Silver | without | 1 pc |
| | TFKR0060-10004_ | Titan Silver | without | 25 pcs |

## Technical information

| Part number | Description | Dimensions (mm) A | |
|---|---|---|---|
| TFKR0080-... | shoot bolt VSO o.H. RSA 14 | 260 | 3 |

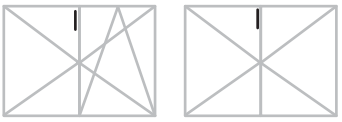

- Use in slave sashes with opposing fitting groove
- Automatic locking of the protruded shootbolt by means of closing over the main sash
- For suitable strikers refer to PDB line item FRZV01
- for RSA 14: if necessary, rework profiles in the rod throw section!
- For basic security
- Component can be coupled

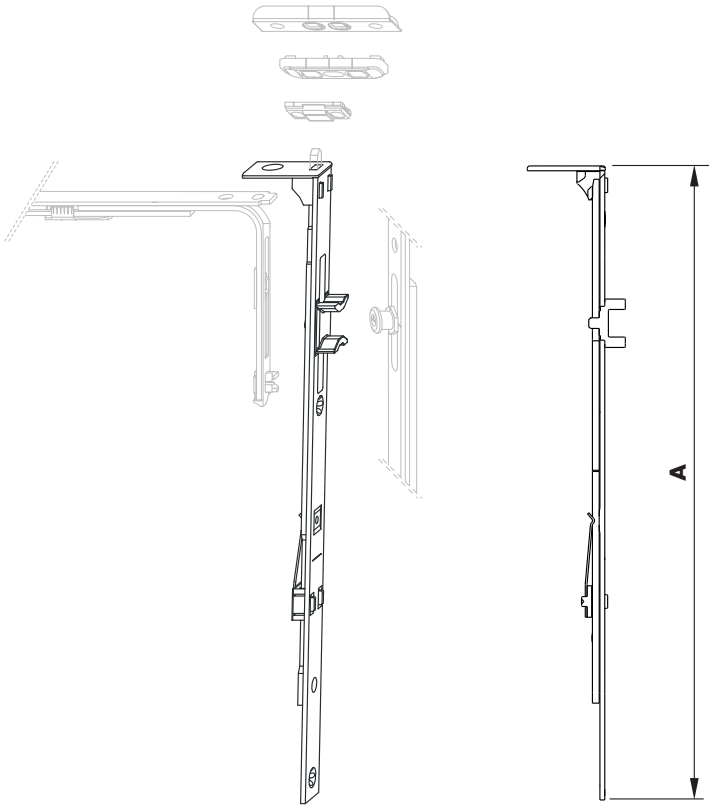


## Sales information

| Description | Part number | Surface | Colour | Box quantity |
|---|---|---|---|---|
| shoot bolt VSO o.H. RSA 14 | TFKR0080-10001_ | Titan Silver | without | 1 pc |
| | TFKR0080-10004_ | Titan Silver | without | 25 pcs |

## Technical information

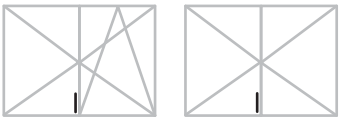

- Use in slave sashes with opposing fitting groove
- For suitable strikers refer to PDB line item FRZV01
- For basic security

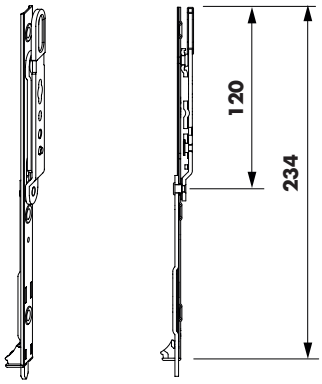

## Technical information

- Snapper profile-related, refer to PDB line item FRZB and FRZB01
- 1. Version for 4 mm airgap
  2. Version for 12 mm airgap
  3. Version for use on secondary sashes
- The depicted version are examples and may vary depending on the profile system.
- Sleeve profile-related, refer to PDB line item FFHU

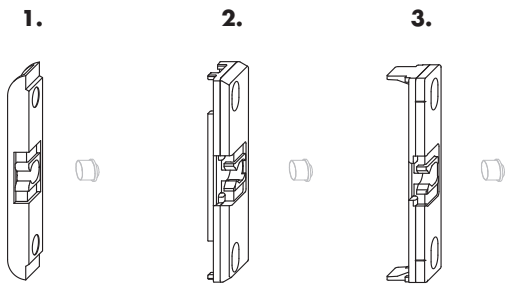

**www.siegenia.com**

SIEGENIA®
brings spaces to life

H69.TAF00S001EN_02.2021